CITY OF GRAIN VALLEY BOARD OF ALDERMEN
REGULAR MEETING AGENDA

JUNE 08, 2020
7:00 P.M.

OPEN TO THE PUBLIC VIA DIAL IN CONFERENCE CALL LINE
DIAL IN: (312) 626-6799 | MEETING ID: 881 6110 5516 | PASSWORD: 480234

ITEM I: CALL TO ORDER
- Mayor Mike Todd

ITEM II: ROLL CALL
- City Clerk Jamie Logan

ITEM III: APPROVAL OF AGENDA
- City Administrator Ken Murphy

ITEM IV: PROCLAMATIONS
- 2020 Grain Valley High School Graduates

ITEM V: CONSENT AGENDA
- May 27, 2020 – Board of Aldermen Regular Meeting Minutes
- June 8, 2020 – Accounts Payable

ITEM VI: PREVIOUS BUSINESS
- None

ITEM VII: NEW BUSINESS
- None

ITEM VIII: PRESENTATIONS
- Auditor Presentation by Troutt Beeman & Co., P.C.

ITEM IX: PUBLIC HEARING
- Chapter 400 Amendments- Fencing Requirements

ITEM X: ORDINANCES

ITEM X (A)
B20-12
2ND READ

An Ordinance Approving the Final Development Plan for the Lofts at Old Towne Market Place and the Final Plat of Old Towne Market Place 12th Plat

To gain final development plan and final plat approval for the Lofts at Old Towne Market Place

ITEM X (B)
B20-13
1ST READ

An Ordinance Amending Chapter 400, Zoning Regulations, of the Code of Ordinances, in Sections 400.040 (Definitions); Section 400.220 (Additional Controls) and Section 400.230 (Accessory Uses)

To amend Chapter 400, Zoning Regulations, pertaining to definitions on building line, yards, and requirements for fence setbacks on corner lot

ITEM XI: RESOLUTIONS

- None

ITEM XII: CITY ATTORNEY REPORT

- City Attorney

ITEM XIII: CITY ADMINISTRATOR & STAFF REPORTS

- City Administrator Ken Murphy
- Deputy City Administrator Theresa Osenbaugh
- Chief of Police James Beale
- Finance Director Steven Craig
- Parks & Recreation Director Shannon Davies
- Community Development Director Mark Trosen
- City Clerk Jamie Logan

ITEM XIV: BOARD OF ALDERMEN REPORTS & COMMENTS

- Alderman Shea Bass
- Alderman Tom Cleaver
- Alderman Bob Headley
- Alderman Jayci Stratton
- Alderman Nancy Totton
- Alderman Yolanda West

ITEM XV: MAYOR REPORT

- Mayor Mike Todd

ITEM XVI: EXECUTIVE SESSION

- Legal Actions, Causes of Action of Litigation Pursuant to Section 610.021(1), RSMo. 1998, as Amended
- Leasing, Purchase or Sale of Real Estate Pursuant to Section 610.021(2), RSMo. 1998, as Amended
- Hiring, Firing, Disciplining or Promoting of Employees (personnel issues), Pursuant to Section 610.021(3), RSMo. 1998, as Amended
- Sealed bids and related documents, until the bids are opened; and sealed proposals and related documents to a negotiated contract until a contract is executed, or all proposals are rejected, Pursuant to Section 610.021(12), RSMo. 1998, as Amended
- Individually Identifiable Personnel Records, Personnel Records, Performance Ratings or Records Pertaining to Employees or Applicants for Employment, Pursuant to Section 610.021(13), RSMo 1998, as Amended.

ITEM XVII: ADJOURNMENT

PLEASE NOTE

THE NEXT SCHEDULED MEETING OF THE GRAIN VALLEY BOARD OF ALDERMEN IS A REGULAR MEETING ON JUNE 22, 2020 AT 7:00 P.M. THE MEETING WILL BE HELD IN THE COUNCIL CHAMBERS OF THE GRAIN VALLEY CITY HALL

PERSONS REQUIRING AN ACCOMMODATION TO PARTICIPATE IN THE MEETING SHOULD CONTACT THE CITY CLERK AT 816.847.6211 AT LEAST 48 HOURS BEFORE THE MEETING

THE CITY OF GRAIN VALLEY IS INTERESTED IN EFFECTIVE COMMUNICATION FOR ALL PERSONS

UPON REQUEST, THE MINUTES FROM THIS MEETING CAN BE MADE AVAILABLE BY CALLING 816.847.6211

INTENTIONALLY LEFT BLANK

Proclamations

INTENTIONALLY LEFT BLANK

Consent Agenda

INTENTIONALLY LEFT BLANK

ITEM I: CALL TO ORDER

- The Board of Aldermen of the City of Grain Valley, Missouri, met in Regular Session on May 27, 2020 at 7:00 p.m. via video conference of the elected officials as a result of the social distancing order due to the COVID-19 pandemic
- The meeting was called to order by Mayor Todd

ITEM II: ROLL CALL

- City Clerk Jamie Logan called roll
- *Present via video conference: Bass, Cleaver, Headley, Stratton, Totton, West*
- *Absent:*

-QUORUM PRESENT-

ITEM III: APPROVAL OF AGENDA

- Black Industries requested for Bill 20-11 for the final plat for Black Industries to have a first and second read tonight since there was a delay getting items on the agenda due to COVID these past few months
- *Alderman Headley made a Motion to do two reads for B20-11*
- *The Motion was Seconded by Alderman Totton*
- *Motion to do two reads of B20-11 was voted on with the following voice vote:*
    - *Aye: Bass, Cleaver, Headley, Stratton, Totton, West*
    - *Nay: None*
    - *Abstain: None*

-MOTION APPROVED: 6-0-

ITEM IV: PROCLAMATIONS

- None

ITEM V: CONSENT AGENDA

- May 11, 2020 – Board of Aldermen Regular Meeting Minutes
- May 27, 2020 – Accounts Payable
- *Alderman West made a Motion to Approve the Consent Agenda*
- *The Motion was Seconded by Alderman Cleaver*
    - No Discussion
- *Motion to Approve the Consent Agenda was voted on with the following voice vote:*

- *Aye: Bass, Cleaver, Headley, Stratton, Totton, West*
- *Nay: None*
- *Abstain: None*

-MOTION APPROVED: 6-0-

ITEM VI: PREVIOUS BUSINESS

- None

ITEM VII: NEW BUSINESS

- None

ITEM VIII: PRESENTATIONS

- None

ITEM IX: PUBLIC HEARING

- None

ITEM X: ORDINANCES

Bill No. B20-09: An Ordinance Changing the Zoning on Approximately 3.1 Acres from District C-2 (General Business) to District M-1 (Light Industrial)

- *Alderman Headley moved to make the second reading by title only for Bill No. B20-09*
- *The Motion was Seconded by Alderman Totton*
  - *This refers back to the last Aldermen meeting's Public Hearing changing zoning for Avid Air which does custom manufacturing*
- *The motion was voted on with the following voice vote:*
  - *Aye: Bass, Cleaver, Headley, Stratton, Totton, West*
  - *Nay:*
  - *Abstain:*

Bill No. B20-09: An Ordinance Changing the Zoning on Approximately 3.1 Acres from District C-2 (General Business) to District M-1 (Light Industrial)

Bill No. B20-09 was read by City Attorney Jeff Deane

- *Alderman Headley moved to accept the second reading of Bill No. B20-09 making it ordinance #2496*
- *The Motion was Seconded by Alderman West*
- *The motion was voted on with the following roll call vote:*
    - *Aye: Bass, Cleaver, Headley, Stratton, Totton, West*
    - *Nay:*
    - *Abstain:*

-Bill No. B20-09 BECAME ORDINANCE #2496: 6-0

Bill No. B20-10: An Ordinance Approving a Conditional Use Permit for a Medical Marijuana Cultivation Facility on Approximately 6 Acres

- *Alderman Headley moved to make the second reading by title only for Bill No. B20-10*
- *The Motion was Seconded by Alderman Stratton*
    - *Similar to last ordinance, there was a Public Hearing at the last Board of Aldermen meeting for a Conditional Use Permit for a Medical Marijuana Cultivation facility*
    - *Alderman Cleaver clarified Parent company out of Las Vegas, Nevada*
- *The motion was voted on with the following voice vote:*
    - *Aye: Bass, Cleaver, Headley, Stratton, Totton, West*
    - *Nay:*
    - *Abstain:*

- *Alderman Headley moved to accept the second reading of Bill No. B20-10 making it ordinance #2497*
- *The Motion was Seconded by Alderman Stratton*

Bill No. B20-10: An Ordinance Approving a Conditional Use Permit for a Medical Marijuana Cultivation Facility on Approximately 6 Acres

Bill No. B20-10 was read by City Attorney Jeff Deane

- *The motion was voted on with the following roll call vote:*
    - *Aye: Bass, Cleaver, Headley, Stratton, Totton, West*
    - *Nay:*
    - *Abstain:*

- *Alderman Headley asked to update the ordinance number to 2503 from 2497 and update the B20-09 to 2502; City Clerk Jamie Logan said it was her error and she gave the wrong ordinance number on the last one; City Attorney Jeff Deane said we could re-vote on the last one to update the ordinance numbers*
- *B20-09 second reading to make it ordinance number 2502 with Alderman Headley made the motion; Alderman West seconded the motion*
- *The motion was voted on with the following roll call vote:*
    - *Aye: Bass, Cleaver, Headley, Stratton, Totton, West*
    - *Nay:*
    - *Abstain:*

-Bill No. B20-09 BECAME ORDINANCE #2502: 6-0

- *Mayor Todd reminded there was a motion by Alderman Headley and a Second by Alderman Stratton for B20-10*
- *The motion was voted on with the following roll call vote:*
    - *Aye: Bass, Cleaver, Headley, Stratton, Totton, West*
    - *Nay:*
    - *Abstain:*

-Bill No. B20-10 BECAME ORDINANCE #2503: 6-0

Bill No. B20-11: An Ordinance Approving the Final Plat of Black Industries

- *Alderman Headley moved to make the first reading by title only of Bill No. B20-11*
- *The Motion was Seconded by Alderman Stratton*
    - *Community Development Director Trosen stated the purpose of this request is to gain final plat approval for Missouri Made Marijuana as the Conditional Use Permit was just approved*
- *Motion to make the first reading of Bill No. B20-11 was voted upon with the following voice vote:*
    - *Aye: Bass, Cleaver, Headley, Stratton, Totton, West*
    - *Nay: None*
    - *Abstain: None*

-Motion Approved: 6-0-

- *Alderman Headley moved to accept the first reading of Bill No. B20-11 bringing it back for a second reading by title only*
- *The Motion was Seconded by Alderman Cleaver*
- *The motion was voted on with the following voice vote:*
    - *Aye: Bass, Cleaver, Headley, Stratton, Totton, West*
    - *Nay: None*
    - *Abstain: None*

-Bill No. B20-11 Approved for a Second Reading: 6-0-

- *Alderman Headley moved to accept the second reading of Bill No. B20-11 making it ordinance #2504*
- *The Motion was Seconded by Alderman Totton*
    - No Discussion

Bill No. B20-11 was read by City Attorney Jeff Deane for the first reading

Bill No. B20-11: An Ordinance Approving the Final Plat of Black Industries
Bill No. B20-11 was read by City Attorney Jeff Deane for the second reading

- *The motion was voted on with the following roll call vote:*
    - *Aye: Bass, Cleaver, Headley, Stratton, Totton, West*
    - *Nay:*
    - *Abstain:*

-Bill No. B20-11 BECAME ORDINANCE #2504: 6-0

- Alderman Headley asked when construction would begin; Mr. Lucas shared as soon as possible now that it has been approved, but could be delays due to COVID; Mr. Black said thank you for allowing them to become a neighbor and partner in our community, and said they'd start in the next 2 to 4 weeks once they receive their permits; Tom Nolte the architect for the project said they are working on permits for the various pieces of the project as well as getting bids for various other projects

Bill No. B20-12: An Ordinance Approving the Final Development Plan for the Lofts at Old Towne Market Place and the Final Plat of Old Towne Market Place 12th Plat

- *Alderman Headley moved to make the first reading by title only of Bill No. B20-12*
- *The Motion was Seconded by Alderman Totton*
    - *Mr. Trosen shared requesting approval for final development plan and plat for Old Towne Market Place*
- *Motion to make the first reading of Bill No. B20-12 was voted upon with the following voice vote:*
    - *Aye: Bass, Cleaver, Headley, Stratton, Totton, West*
    - *Nay: None*
    - *Abstain: None*

-Motion Approved: 6-0-

Bill No. B20-12 was read by City Attorney Jeff Deane

Bill No. B20-12: An Ordinance Approving the Final Development Plan for the Lofts at Old Towne Market Place and the Final Plat of Old Towne Market Place 12th Plat

- *Alderman Headley moved to accept the first reading of Bill No. B20-12 bringing it back for a second reading by title only at the next regular meeting*
- *The Motion was Seconded by Alderman Totton*
    - *Alderman Stratton asked if there was any way to know this will not turn into government housing; Mr. Murphy shared in the beginning of a development this is determined, but it can change; Bryan the representative for the Lofts said their intention is not to go to income based rentals; Alderman Cleaver asked what would keep it this way 5 years from now; Bryan shared that has not been their design or plan aspect of the development and shared he doesn't believe there is a way to restrict it; Alderman Stratton asked if something like that gets approved through the board if it were to come up or if it just happens without approval from the City/Board; Alderman Stratton has received this feedback from the community and they hope it stays that way*

Bill No. B20-12: An Ordinance Approving the Final Development Plan for the Lofts at Old Towne Market Place and the Final Plat of Old Towne Market Place 12th Plat

Bill No. B20-12 was read by City Attorney Jeff Deane

- *The motion was voted on with the following voice vote:*
  - *Aye: Bass, Cleaver, Headley, Stratton, Totton, West*
  - *Nay: None*
  - *Abstain: None*

-Bill No. B20-12 Approved for a Second Reading: 6-0-

ITEM XI: RESOLUTIONS

Resolution No. R20-30: A Resolution by the Board of Aldermen of the City of Grain Valley, Reappointing Becky Gray, Charles Harris and Jared English to the Grain Valley Parks and Recreation Board for Three-Year Terms

- *Alderman Headley motioned to approve Resolution No. R20-30*
- *The Motion was Seconded by Alderman Totton*
  - *Mr. Murphy shared there are a few positions that are renewed each year on this board*
- *Resolution No. R20-30 was voted upon with the following voice vote:*
  - *Aye: Bass, Cleaver, Headley, Stratton, Totton, West*
  - *Nay: None*
  - *Abstain: None*

-Resolution No. R20-30 Approved: 6-0-

Resolution No. R20-31: A Resolution by the Board of Aldermen of the City of Grain Valley, Missouri Reappointing Mike Switzer & Justin Tyson to the Industrial Development Authority Corporation of the City of Grain Valley, Missouri for Six-Year Terms

- *Alderman Headley motioned to approve Resolution No. R20-31*
- *The Motion was Seconded by Alderman Totton*
  - *Two seats up for renewal on Industrial Development board*
- *Resolution No. R20-31 was voted upon with the following voice vote:*
  - *Aye: Bass, Cleaver, Headley, Stratton, Totton, West*
  - *Nay: None*
  - *Abstain: None*

-Resolution No. R20-31 Approved: 6-0-

Resolution No. R20-32: A Resolution by the Board of Aldermen of the City of Grain Valley Authorizing the City Administrator to Enter into an Agreement with Stanger Industries, Inc. for HVAC Preventative Maintenance/Services

- *Alderman Headley motioned to approve Resolution No. R20-32*
- *The Motion was Seconded by Alderman Cleaver*
    - *In the past, as service is needed, the City has used one off providers when something comes up which is time consuming and now we are hoping for better rates by using the RFP process*
- *Resolution No. R20-32 was voted upon with the following voice vote:*
    - *Aye: Bass, Cleaver, Headley, Stratton, Totton, West*
    - *Nay: None*
    - *Abstain: None*

-Resolution No. R20-32 Approved: 6-0-

Resolution No. R20-33: A Resolution by the Board of Aldermen of the City of Grain Valley Authorizing the City Administrator to Enter into an Agreement with A & A Electrical, Inc. for Electrical Service (as Needed)

- *Alderman Headley motioned to approve Resolution No. R20-33*
- *The Motion was Seconded by Alderman West*
    - *Similar to HVAC, this is for electrical services as needed*
- *Resolution No. R20-33 was voted upon with the following voice vote:*
    - *Aye: Bass, Cleaver, Headley, Stratton, Totton, West*
    - *Nay: None*
    - *Abstain: None*

-Resolution No. R20-33 Approved: 6-0-

Resolution No. R20-34: A Resolution by the Board of Aldermen of the City of Grain Valley Authorizing the City Administrator to Enter into an Agreement with Summit General Contracting, LLC. for Building Maintenance (as Needed)

- *Alderman Headley motioned to approve Resolution No. R20-34*
- *The Motion was Seconded by Alderman West*

- *Similar to the last two, but this is for building maintenance; would allow for building engineer or parks staff in to work on these items when problems arise, now we would have someone else that could assist*

- *Resolution No. R20-34 was voted upon with the following voice vote:*
  - *Aye: Bass, Cleaver, Headley, Stratton, Totton, West*
  - *Nay: None*
  - *Abstain: None*

-Resolution No. R20-34 Approved: 6-0-

ITEM XII: CITY ATTORNEY REPORT

- Jeff Deane upcoming elected officials training

ITEM XIII: CITY ADMINISTRATOR & STAFF REPORTS

- City Administrator Ken Murphy
  - June 8 meeting will be done via Zoom again; hoping to resume in person meetings on June 22
- Deputy City Administrator Theresa Osenbaugh
  - June Senior Luncheon is cancelled due to COVID; hoping to get to do this again in July
- Chief James Beale
  - None
- Finance Director Steven Craig
  - Reminder that the auditors, Trout Beeman will present at the next meeting
- Parks & Recreation Director Shannon Davies
  - Spring/Summer Youth baseball/softball seasons have been cancelled as of 5/15 due to COVID restrictions; several surrounding communities did the same; they are planning for fall leagues at this point
  - May 18 the fitness room at the Community Center was opened, they have implemented all of the COVID safeguards as part of the opening with adjusted hours; hoping to resume regular hours on June 8 with some restrictions due to capacity restrictions
  - Outdoor pool opening was delayed and hoping they can open at some point; Independence, Kansas City and others have closed for the season; Lees Summit and Oak Grove have not; waiting to find out what the County guidelines will be before making final determination

- Community Development Director Mark Trosen
  - Written Report
  - The Community Development Event has been cancelled due to COVID-19 and the Clean up has been postponed to September 26, 2020; Thursday, September 24th and Friday, September 25th for Senior pick up scheduled in advance
- City Clerk Jamie Logan
  - Reminded of the upcoming election Tuesday, June 2, 2020

ITEM XIV: BOARD OF ALDERMEN REPORTS & COMMENTS

- Alderman Shea Bass
  - None
- Alderman Tom Cleaver
  - None
- Alderman Bob Headley
  - None
- Alderman Jayci Stratton
  - None
- Alderman Nancy Totton
  - She enjoyed the race track this past weekend
- Alderman Yolanda West
  - None

ITEM XV: MAYOR REPORT

- Mayor Mike Todd
  - None

ITEM XVI: EXECUTIVE SESSION

- None

ITEM XIX: ADJOURNMENT

- The meeting adjourned at 7:43 P.M.

Minutes submitted by:

_____ _____

Jamie Logan
City Clerk

Date

Minutes approved by:

_____ _____

Mike Todd
Mayor

Date

ELECTED OFFICIALS PRESENT	ELECTED OFFICIALS ABSENT	STAFF OFFICIALS PRESENT
Mayor Mike Todd		City Administrator Ken Murphy
Alderman Shea Bass		Deputy City Administrator Theresa Osenbaugh
Alderman Tom Cleaver		Chief James Beale
Alderman Bob Headley		Parks and Recreation Director Shannon Davies
Alderman Jayci Stratton		Community Development Director Mark Trosen
Alderman Nancy Totton		City Clerk Jamie Logan
Alderman Yolanda West		City Attorney Jeffrey Deane
		City Attorney Kelly St. John

INTENTIONALLY LEFT BLANK

DEPARTMENT	FUND	VENDOR NAME	DESCRIPTION	AMOUNT
NON-DEPARTMENTAL	GENERAL FUND	KCMO CITY TREASURER	KC EARNINGS TAX WH	41.25
		MO DEPT OF REVENUE	MISSOURI WITHHOLDING	2,253.86
		FRATERNAL ORDER OF POLICE	EMPLOYEE DEDUCTIONS	336.00
		HAMPEL OIL INC	CJC FUEL	277.00
		AFLAC	AFLAC AFTER TAX	126.59
			AFLAC CRITICAL CARE	24.96
			AFLAC PRETAX	300.98
			AFLAC-W2 DD PRETAX	166.32
		MIDWEST PUBLIC RISK	DENTAL	162.73
			OPEN ACCESS	567.61
			OPEN ACCESS	203.08
			HSA	251.75
			HSA	1,546.15
			HSA	161.08
			VISION	50.80
			VISION	115.28
			VISION	26.26
		HSA BANK	HSA - GRAIN VALLEY, MO	260.05
			HSA - GRAIN VALLEY, MO	372.02
		THE LINCOLN NATIONAL LIFE INSURANCE CO	JUNE 2020 DISABILITY	262.96
		CITY OF GRAIN VALLEY -FLEX	FLEX - DEPENDENT CARE	213.80
		ICMA RC	ICMA 457 %	293.48
			ICMA 457	363.17
			ICMA ROTH IRA	67.50
		MIDWEST PUBLIC RISK OF MO	FY 20-21 PRPERTY AND LIABI	7,477.87
			FY 20-21 PRPERTY AND LIABI	41,173.43
			FY 20-21 WORKERS COMP	57,666.55
		INTERNAL REVENUE SERVICE	FEDERAL WH	6,365.62
			SOCIAL SECURITY	4,372.48
			MEDICARE	1,022.60
			TOTAL:	126,523.23
HR/CITY CLERK	GENERAL FUND	IPMA-HR GREATER KC CHAPTER	HOLLAND: IPMA MEMBERSHIP	100.00
		MISSOURI LAGERS	MONTHLY CONTRIBUTIONS	157.08
		OFFICE DEPOT	COVER	10.49
		WAGEWORKS	MAY 2020 MONTHLY FEES	63.50
		STANDARD INSURANCE CO	JUNE 20 STANDARD LIFE	12.00
		INSIGHT PUBLIC SAFETY AND FORENSIC CON	WELLNESS SCREENING	160.00
		MIDWEST PUBLIC RISK	DENTAL	34.56
			HSA	237.40
			HSA	312.21
		HSA BANK	HSA - GRAIN VALLEY, MO	100.00
		THE LINCOLN NATIONAL LIFE INSURANCE CO	JUNE 2020 DISABILITY	16.58
		CONCENTRA MEDICAL CENTERS	SCREENINGS	179.00
		ST LUKES HOSPITAL	SKINNER TESTING	42.00
		MIDWEST PUBLIC RISK OF MO	FY 20-21 PRPERTY AND LIABI	7,477.88
			FY 20-21 PRPERTY AND LIABI	41,173.42
			FY 20-21 WORKERS COMP	70.65
		INTERNAL REVENUE SERVICE	SOCIAL SECURITY	110.72
			MEDICARE	25.90
			TOTAL:	50,283.39
INFORMATION TECH	GENERAL FUND	NETSTANDARD INC	APR DATASAFE BACKUPS	875.00
			NETSTANDARD CLARITY	3,708.00
			05/12-06/11 OFFICE 365	738.00
		VERIZON WIRELESS	CELLULAR SERVICE 05/19-06/	160.04

DEPARTMENT	FUND	VENDOR NAME	DESCRIPTION	AMOUNT
			CELLULAR SERVICE 05/19-06/	40.01
			TOTAL:	5,521.05
BLDG & GRDS	GENERAL FUND	BATTS COMMUNICATIONS SERVICES INC	JUN 20 MAINTENANCE	125.00
		SAMS CLUB/GECRB	TOILET PAPER	20.98
		COMCAST	CITY HALL PHONE CHARGES	358.33
		EVERGY	GREGG ST	46.29
			600 BUCKNER TARSNEY RD	20.43
			596 BUCKNER TARSNEY RD	14.04
			CAPPELL & FRONT, PH, PUBLI	11.07
			618 JAMES ROLLO CT	95.78
			1608 NW WOODBURY DR	32.15
			6100 S BUCKNER TARSNEY	12.29
			618 JAMES ROLLO CT	17.61
			711 MMAIN ST CITY HALL	808.31
			620 JAMES ROLLO CT	25.04
			517 GREGG	89.20
			1805 NW WILLOW DR	32.06
		AUTOMATIC DOOR SYSTEMS LLC	CONTROLS FOR FRONT DOORS	2,810.72
			TOTAL:	4,519.30
ADMINISTRATION	GENERAL FUND	MISSOURI LAGERS	EMPLOYER CONTRIBUTIONS	4.03
			MONTHLY CONTRIBUTIONS	329.74
		OFFICE DEPOT	PAPER/PEN	33.20
		STANDARD INSURANCE CO	JUNE 20 STANDARD LIFE	15.00
		MIDWEST PUBLIC RISK	DENTAL	23.85
			DENTAL	1.01
			OPEN ACCESS	180.20
			HSA	246.13
			HSA	18.16
		HSA BANK	HSA - GRAIN VALLEY, MO	64.15
			HSA - GRAIN VALLEY, MO	2.91
		THE LINCOLN NATIONAL LIFE INSURANCE CO	JUNE 2020 DISABILITY	30.55
		PITNEY BOWES GLOBAL FINANCIAL SERVICES	QRTLY PYMNT 03/0820-06/07/	140.76
		MIDWEST PUBLIC RISK OF MO	FY 20-21 WORKERS COMP	249.75
		INTERNAL REVENUE SERVICE	SOCIAL SECURITY	263.61
			MEDICARE	61.65
			TOTAL:	1,664.70
ELECTED	GENERAL FUND	VERIZON WIRELESS	CELLULAR SERVICE 05/19-06/	40.01
		MIDWEST PUBLIC RISK OF MO	FY 20-21 WORKERS COMP	49.20
			TOTAL:	89.21
FINANCE	GENERAL FUND	MO DEPT OF REVENUE	MISSOURI WITHHOLDING	0.50
		MISSOURI LAGERS	MONTHLY CONTRIBUTIONS	229.63
		STANDARD INSURANCE CO	JUNE 20 STANDARD LIFE	12.00
		MIDWEST PUBLIC RISK	DENTAL	34.56
			OPEN ACCESS	391.03
			HSA	143.87
		HSA BANK	HSA - GRAIN VALLEY, MO	37.50
		THE LINCOLN NATIONAL LIFE INSURANCE CO	JUNE 2020 DISABILITY	24.23
		MIDWEST PUBLIC RISK OF MO	FY 20-21 WORKERS COMP	135.96
		INTERNAL REVENUE SERVICE	SOCIAL SECURITY	172.12
			MEDICARE	40.26
			TOTAL:	1,221.66

DEPARTMENT	FUND	VENDOR NAME	DESCRIPTION	AMOUNT
COURT	GENERAL FUND	MISSOURI LAGERS	MONTHLY CONTRIBUTIONS	144.32
		STANDARD INSURANCE CO	JUNE 20 STANDARD LIFE	12.00
		MIDWEST PUBLIC RISK	DENTAL	17.59
			HSA	287.74
		HSA BANK	HSA - GRAIN VALLEY, MO	75.00
		THE LINCOLN NATIONAL LIFE INSURANCE CO	JUNE 2020 DISABILITY	15.23
		MIDWEST PUBLIC RISK OF MO	FY 20-21 WORKERS COMP	112.00
		INTERNAL REVENUE SERVICE	SOCIAL SECURITY	170.25
			MEDICARE	39.81
			TOTAL:	873.94
VICTIM SERVICES	GENERAL FUND	MISSOURI LAGERS	MONTHLY CONTRIBUTIONS	127.32
		STANDARD INSURANCE CO	JUNE 20 STANDARD LIFE	12.00
		MIDWEST PUBLIC RISK	DENTAL	34.56
			HSA	624.41
		HSA BANK	HSA - GRAIN VALLEY, MO	100.00
		THE LINCOLN NATIONAL LIFE INSURANCE CO	JUNE 2020 DISABILITY	13.43
		VERIZON WIRELESS	CELLULAR SERVICE 05/19-06/	43.06
		MIDWEST PUBLIC RISK OF MO	FY 20-21 WORKERS COMP	104.44
		INTERNAL REVENUE SERVICE	SOCIAL SECURITY	136.12
			MEDICARE	31.84
			TOTAL:	1,227.18
FLEET	GENERAL FUND	MISSOURI LAGERS	MONTHLY CONTRIBUTIONS	71.03
		STANDARD INSURANCE CO	JUNE 20 STANDARD LIFE	6.00
		OREILLY AUTOMOTIVE INC	FUSE HOLDER	21.02
			XL NITRILE GLOVES	29.98
			WIRE CLIP	10.30
			DISCONNECT	11.96
			FUEL CLIP	4.16
		FASTENAL COMPANY	PPH SMS 6X2 Z AKEG	3.50
		MIDWEST PUBLIC RISK	DENTAL	17.28
			HSA	143.87
		HSA BANK	HSA - GRAIN VALLEY, MO	37.50
		THE LINCOLN NATIONAL LIFE INSURANCE CO	JUNE 2020 DISABILITY	7.50
		CINTAS CORPORATION # 430	PW/WOLTZ UNIFORMS	9.92
			PW/WOLTZ UNIFORMS	9.91
		MIDWEST PUBLIC RISK OF MO	FY 20-21 WORKERS COMP	725.60
		INTERNAL REVENUE SERVICE	SOCIAL SECURITY	55.46
			MEDICARE	12.97
			TOTAL:	1,177.96
POLICE	GENERAL FUND	MISSOURI LAGERS	EMPLOYER CONTRIBUTIONS	3,897.47
			MONTHLY CONTRIBUTIONS	365.35
		ADVANCE AUTO PARTS	AIR FILTER/OIL FILTER	20.28
		STATE BANK OF MISSOURI	05/20 IN-CAR SYSTEM	2,314.61
			VEHICLE LEASE PAYMENT	1,401.65
			VEHICLE LEASE PAYMENT	105.91
		OFFICE DEPOT	PAPER/PEN	34.99
		EAGLE VALLEY AUTOMOTIVE LLC	2016 FORD: 4 WHEEL ALIGNME	69.95
		STANDARD INSURANCE CO	JUNE 20 STANDARD LIFE	312.00
		OREILLY AUTOMOTIVE INC	BRAKE ROTOR/DOSC PAD SET	314.71
			FUEL FILTER/AIR FILTER	16.91
		INTERSTATE ALL BATTERY CENTER	3V 1.55AH LIT CR 123NB1 10	195.00
		HAMPEL OIL INC	BULK GASOHOL/DIESEL	1,081.38
			BULK GASOHOL/DIESEL	152.38

DEPARTMENT	FUND	VENDOR NAME	DESCRIPTION	AMOUNT
		COMCAST	HIGH SPEED INTERNET	149.85
		GOODYEAR COMMERCIAL TIRE	3) GY 245/55R18 EAG RSA VS	406.50
		MIDWEST PUBLIC RISK	DENTAL	210.57
			DENTAL	483.84
			ROUNDING	0.09-
			OPEN ACCESS	720.78
			OPEN ACCESS	1,564.10
			OPEN ACCESS	688.35
			HSA	949.58
			HSA	3,156.84
			HSA	4,370.87
			HSA	549.59
		HSA BANK	HSA - GRAIN VALLEY, MO	822.84
			HSA - GRAIN VALLEY, MO	1,000.00
		THE LINCOLN NATIONAL LIFE INSURANCE CO	JUNE 2020 DISABILITY	424.04
		MIDWAY AUTO INC	2016 EXPLORER STEERING GEA	390.00
			CORE	100.00-
		VERIZON WIRELESS	CELLULAR SERVICE 05/19-06/	80.02
			CELLULAR SERVICE 05/19-06/	129.18
			CELLULAR SERVICE 05/19-06/	1,178.86
		MIDWEST PUBLIC RISK OF MO	FY 20-21 WORKERS COMP	52,213.88
		INTERNAL REVENUE SERVICE	SOCIAL SECURITY	2,992.42
			MEDICARE	699.84
		REJIS COMMISSION	LOG TAPE SEARCH	25.00
			MAY 20 LEWEB SUBSCRIPTION	312.95
			TOTAL:	83,702.40
ANIMAL CONTROL	GENERAL FUND	MISSOURI LAGERS	MONTHLY CONTRIBUTIONS	98.50
		STANDARD INSURANCE CO	JUNE 20 STANDARD LIFE	12.00
		HAMPEL OIL INC	BULK GASOHOL/DIESEL	37.75
		MIDWEST PUBLIC RISK	OPEN ACCESS	360.39
		THE LINCOLN NATIONAL LIFE INSURANCE CO	JUNE 2020 DISABILITY	10.40
		VERIZON WIRELESS	CELLULAR SERVICE 05/19-06/	43.06
		MIDWEST PUBLIC RISK OF MO	FY 20-21 WORKERS COMP	588.93
		INTERNAL REVENUE SERVICE	SOCIAL SECURITY	77.30
			MEDICARE	18.08
			TOTAL:	1,246.41
PLANNING & ENGINEERING	GENERAL FUND	MISSOURI LAGERS	MONTHLY CONTRIBUTIONS	514.02
		STANDARD INSURANCE CO	JUNE 20 STANDARD LIFE	35.97
		HAMPEL OIL INC	BULK GASOHOL/DIESEL	7.10
		MIDWEST PUBLIC RISK	DENTAL	48.24
			DENTAL	10.10
			OPEN ACCESS	103.25
			HSA	789.12
			HSA	78.24
		HSA BANK	HSA - GRAIN VALLEY, MO	205.68
			HSA - GRAIN VALLEY, MO	14.24
		THE LINCOLN NATIONAL LIFE INSURANCE CO	JUNE 2020 DISABILITY	54.25
		VERIZON WIRELESS	CELLULAR SERVICE 05/19-06/	6.46
		MIDWEST PUBLIC RISK OF MO	FY 20-21 WORKERS COMP	3,416.17
		INTERNAL REVENUE SERVICE	SOCIAL SECURITY	394.50
			MEDICARE	92.27
			TOTAL:	5,769.61
NON-DEPARTMENTAL	PARK FUND	KCMO CITY TREASURER	KC EARNINGS TAX WH	21.36

DEPARTMENT	FUND	VENDOR NAME	DESCRIPTION	AMOUNT
		MO DEPT OF REVENUE	MISSOURI WITHHOLDING	412.17
		FAMILY SUPPORT PAYMENT CENTER	SMITH CASE 91316387	92.31
		AFLAC	AFLAC CRITICAL CARE	6.78
			AFLAC PRETAX	54.53
			AFLAC-W2 DD PRETAX	71.41
		MISCELLANEOUS	MELISSA STRADER:	80.00
			JARED OLIVAREZ:	180.00
			JARED OLIVAREZ:	80.00
			THERESA OSENBAUGH:	80.00
			JAMIE MCCAIN:	80.00
			MAGGIE NGAR:	70.00
			SANDY REICHERT:	140.46
			JEREMY JAYNES:	1,100.00
		MIDWEST PUBLIC RISK	DENTAL	31.03
			OPEN ACCESS	22.70
			HSA	312.17
			HSA	18.13
			VISION	15.48
			VISION	12.12
			VISION	1.10
		HSA BANK	HSA - GRAIN VALLEY, MO	75.00
			HSA - GRAIN VALLEY, MO	47.00
		THE LINCOLN NATIONAL LIFE INSURANCE CO	JUNE 2020 DISABILITY	8.27
		CITY OF GRAIN VALLEY -FLEX	FLEX - DEPENDENT CARE	195.57
		ICMA RC	ICMA 457 %	172.28
			ICMA 457	536.85
			ICMA ROTH IRA	46.88
			ICMA ROTH IRA	3.50
		MIDWEST PUBLIC RISK OF MO	FY 20-21 PRPERTY AND LIABI	1,518.35
			FY 20-21 PRPERTY AND LIABI	8,360.09
			FY 20-21 WORKERS COMP	7,273.98
		INTERNAL REVENUE SERVICE	FEDERAL WH	1,112.82
			SOCIAL SECURITY	768.28
			MEDICARE	179.69
			TOTAL:	23,180.31
PARK ADMIN	PARK FUND	NETSTANDARD INC	NETSTANDARD CLARITY	618.00
		MISSOURI LAGERS	MONTHLY CONTRIBUTIONS	529.30
		AT&T	U-VERSE PARK MAINTENANCE	69.55
		STANDARD INSURANCE CO	JUNE 20 STANDARD LIFE	31.20
		HAMPEL OIL INC	BULK GASOHOL/DIESEL	245.50
		COMCAST	CITY HALL PHONE CHARGES	59.72
		MIDWEST PUBLIC RISK	DENTAL	3.43
			DENTAL	82.96
			OPEN ACCESS	36.04
			OPEN ACCESS	78.21
			HSA	997.06
			HSA	56.04
			HSA	62.44
		HSA BANK	HSA - GRAIN VALLEY, MO	14.61
			HSA - GRAIN VALLEY, MO	220.00
		THE LINCOLN NATIONAL LIFE INSURANCE CO	JUNE 2020 DISABILITY	55.81
		VERIZON WIRELESS	CELLULAR SERVICE 05/19-06/	83.07
		COOK FLATT & STROBEL ENGINEERS PA	Ped Bridge Des/Eng	1,029.00
		MIDWEST PUBLIC RISK OF MO	FY 20-21 PRPERTY AND LIABI	1,518.35
			FY 20-21 PRPERTY AND LIABI	8,360.08

DEPARTMENT	FUND	VENDOR NAME	DESCRIPTION	AMOUNT
			FY 20-21 WORKERS COMP	300.81
		INTERNAL REVENUE SERVICE	SOCIAL SECURITY	381.30
			MEDICARE	89.18
			TOTAL:	14,921.66
PARKS STAFF	PARK FUND	MISSOURI LAGERS	MONTHLY CONTRIBUTIONS	375.92
		STANDARD INSURANCE CO	JUNE 20 STANDARD LIFE	36.00
		FASTENAL COMPANY	8" UVBLACK CBL TIES	12.22
		MENARDS - INDEPENDENCE	SHELTER 3 WIRE MESH FOR CO	208.36
		MIDWEST PUBLIC RISK	DENTAL	35.18
			DENTAL	34.56
			HSA	474.79
			HSA	575.48
		HSA BANK	HSA - GRAIN VALLEY, MO	150.00
			HSA - GRAIN VALLEY, MO	100.00
		THE LINCOLN NATIONAL LIFE INSURANCE CO	JUNE 2020 DISABILITY	39.63
		EVERGY	701 SW EAGLES PKWY	117.06
			ARMSTRONG PARK 041503	99.09
			ARMSTRONG PARK DR	30.15
			ARMSTRONG PARK 098095	30.81
			ARMSTRONG PARK 017576	134.08
			28605 E HWY AA	38.48
			JAMES ROLLO SHELTER #2	46.02
			MAIN - ARMSTRONG SHETLER 1	23.15
			618 JAMES ROLLO CT	47.89
			ARMSTRONG PARK	33.69
			6100 S BUCKNER TARSNEY RD	75.36
			28605 E HWY AA	129.37
			618 JAMES ROLLO CT	8.81
		AUTOMATIC DOOR SYSTEMS LLC	CONTROLS FOR FRONT DOORS	468.45
		MIDWEST PUBLIC RISK OF MO	FY 20-21 WORKERS COMP	4,944.04
		INTERNAL REVENUE SERVICE	SOCIAL SECURITY	279.36
			MEDICARE	65.34
			TOTAL:	8,613.29
RECREATION	PARK FUND	MIDWEST PUBLIC RISK OF MO	FY 20-21 WORKERS COMP	879.65
			TOTAL:	879.65
COMMUNITY CENTER	PARK FUND	BATTS COMMUNICATIONS SERVICES INC	JUN 20 MAINTENANCE	12.50
		MISSOURI LAGERS	MONTHLY CONTRIBUTIONS	138.38
		STANDARD INSURANCE CO	JUNE 20 STANDARD LIFE	12.00
		HOME DEPOT CREDIT SERVICES	MEETING ROOM PAINTING SUPP	101.83
			CC SNEEZE GUARD	16.53
		MIDWEST PUBLIC RISK	DENTAL	17.59
			HSA	287.74
		HSA BANK	HSA - GRAIN VALLEY, MO	75.00
		REGAL PLASTIC SUPPLY CO	LARGE SNEEZEGUARD SHIELD	197.95
		THE LINCOLN NATIONAL LIFE INSURANCE CO	JUNE 2020 DISABILITY	14.60
		MEYER LABORATORY INC	GLOVES	60.00
			SURFACE SANITIZING WIPES	100.00
		VERIZON WIRELESS	CELLULAR SERVICE 05/19-06/	43.06
		EVERGY	713 MAIN ST	721.71
			713 MAIN #A	134.80
		MIDWEST PUBLIC RISK OF MO	FY 20-21 WORKERS COMP	1,019.78
		INTERNAL REVENUE SERVICE	SOCIAL SECURITY	107.62
			MEDICARE	25.17

DEPARTMENT	FUND	VENDOR NAME	DESCRIPTION	AMOUNT
			TOTAL:	3,086.26
POOL	PARK FUND	TNEMEC COMPANY INC	Repaint Pool Areas	768.72
		MIDWEST PUBLIC RISK OF MO	FY 20-21 WORKERS COMP	129.70
			TOTAL:	898.42
NON-DEPARTMENTAL	TRANSPORTATION	MO DEPT OF REVENUE	MISSOURI WITHHOLDING	147.76
		FAMILY SUPPORT PAYMENT CENTER	DZEKUNSKAS CASE 41452523	30.00
		AFLAC	AFLAC PRETAX	4.64
			AFLAC-W2 DD PRETAX	8.05
		MIDWEST PUBLIC RISK	DENTAL	17.25
			OPEN ACCESS	25.23
			OPEN ACCESS	26.49
			HSA	60.42
			HSA	71.46
			HSA	76.47
			VISION	3.10
			VISION	1.34
			VISION	2.13
			VISION	5.54
		HSA BANK	HSA - GRAIN VALLEY, MO	14.96
			HSA - GRAIN VALLEY, MO	79.01
		THE LINCOLN NATIONAL LIFE INSURANCE CO	JUNE 2020 DISABILITY	2.58
		ICMA RC	ICMA 457 %	26.87
			ICMA 457	16.02
			ICMA ROTH IRA	30.00
		MIDWEST PUBLIC RISK OF MO	FY 20-21 PRPERTY AND LIABI	926.19
			FY 20-21 PRPERTY AND LIABI	5,099.65
			FY 20-21 WORKERS COMP	6,024.77
		INTERNAL REVENUE SERVICE	FEDERAL WH	417.31
			SOCIAL SECURITY	291.66
			MEDICARE	68.21
			TOTAL:	13,477.11
TRANSPORTATION	TRANSPORTATION	NETSTANDARD INC	APR DATASAFE BACKUPS	175.00
			NETSTANDARD CLARITY	370.80
			05/12-06/11 OFFICE 365	147.60
		BATTS COMMUNICATIONS SERVICES INC	JUN 20 MAINTENANCE	12.50
		FELDMANS FARM & HOME	2"X50" DISCHARGE ASSEMBLY	17.20
		MISSOURI LAGERS	MONTHLY CONTRIBUTIONS	401.70
		VALLEY OUTDOOR EQUIPMENT	KIT/KEY SWITCH	9.96
		CUES	STRAIN RELIEF, CBL, PLATIN	81.68
			SEWER CAMERA REPAIR	198.21
			SEWER CAMERA REPAIR	19.45
		STANDARD INSURANCE CO	JUNE 20 STANDARD LIFE	31.77
		ASP ENTERPRISES INC	FLEXAMAT ROLLS	4,053.00
		LOWES	MAGNETIC BOWL SET/COMM TR	3.85
		VANCE BROTHERS INC	FINE MIX	210.00
			FINE MIX	210.00
			FINE MIX	140.00
			FINE MIX	140.00
		HAMPEL OIL INC	BULK GASOHOL/DIESEL	99.81
		HOME DEPOT CREDIT SERVICES	RADAR SQ EDGE CEILING/HDX	8.27
			RADAR SQ EDGE CEILING/HDX	7.32
		GOODYEAR COMMERCIAL TIRE	GY 235/85R16 ENDURANCE ST	23.77
		COMCAST	CITY HALL PHONE CHARGES	35.83

DEPARTMENT	FUND	VENDOR NAME		DESCRIPTION	AMOUNT
		MIDWEST PUBLIC RISK		DENTAL	13.95
				DENTAL	65.18
				OPEN ACCESS	118.93
				OPEN ACCESS	72.08
				OPEN ACCESS	103.25
				HSA	284.88
				HSA	170.48
				HSA	246.13
				HSA	298.07
		HSA BANK		HSA - GRAIN VALLEY, MO	29.43
				HSA - GRAIN VALLEY, MO	153.66
		THE LINCOLN NATIONAL LIFE INSURANCE CO		JUNE 2020 DISABILITY	41.80
		JOHN DEERE FINANCIAL		WRENCH COMBO	3.99
		VERIZON WIRELESS		CELLULAR SERVICE 05/19-06/	72.63
				CELLULAR SERVICE 05/19-06/	6.45
		CINTAS CORPORATION # 430		PW/WOLTZ UNIFORMS	26.19
				PW/WOLTZ UNIFORMS	26.20
		EVERGY		655 SW EAGLES PKWY	37.07
				618 JAMES ROLLO CT	95.78
				AA HWY & SNI-A-BAR BLVD	32.10
				702 SW EAGLES PKWY	36.59
				GRAIN VALLEY ST LIGHTS	12,082.10
				618 JAMES ROLLO CT	17.61
				711 MMAIN ST CITY HALL	69.29
		INFRASTRUCTURE MANAGEMENT SERVICES LLC		PAVEMENT CONDITION ASSESS	4,819.20
		AUTOMATIC DOOR SYSTEMS LLC		CONTROLS FOR FRONT DOORS	281.07
		ARVEST BANK		TAKEUCHI LEASE/PURCHASE	3,052.78
		OAK GROVE RENTAL INC		DEMO HAMMER RENTAL	34.46
		MIDWEST PUBLIC RISK OF MO		FY 20-21 PRPERTY AND LIABI	926.20
				FY 20-21 PRPERTY AND LIABI	5,099.66
				FY 20-21 WORKERS COMP	6,024.77
		SCHULTE SUPPLY INC		42" X 12" X .080 BARE ALUM	461.22
				12" X 56" X .080 BARE ALUM	440.76
		INTERNAL REVENUE SERVICE		SOCIAL SECURITY	291.66
				MEDICARE	68.21
				TOTAL:	42,001.55
NON-DEPARTMENTAL	MKTPL TIF-PR#2 SPE	UMB BANK		PRO #2 CITY SALES	2,565.26
				TOTAL:	2,565.26
NON-DEPARTMENTAL	MKT PL CID-PR2 SAL	UMB BANK		CID/USE	1,394.68
				CID/USE UNCAPTURED	1,352.83
				TOTAL:	2,747.51
NON-DEPARTMENTAL	WATER/SEWER FUND	KCMO CITY TREASURER		KC EARNINGS TAX WH	8.71
		MO DEPT OF REVENUE		MISSOURI WITHHOLDING	1,025.27
		FAMILY SUPPORT PAYMENT CENTER		DZEKUNSKAS CASE 41452523	120.00
		MO DEPT OF REVENUE		MAY 20 SALES TAX	3,495.22
				MAY 20 SALES TAX	69.90-
		AFLAC		AFLAC PRETAX	36.54
				AFLAC-W2 DD PRETAX	88.33
		MISCELLANEOUS	WENGER, AMY	20-102200-06	15.54
			KANSAS CITY REAL EST	20-111600-02	15.54
			STEGEMAN, BRADLEY	20-260660-04	15.54
			BUTHERUS, THOMAS D	20-561940-04	28.27
			SHARPLES, KAJSA	20-562070-10	57.24

DEPARTMENT	FUND	VENDOR NAME	DESCRIPTION	AMOUNT
		CLARK, JOHN	20-567620-01	65.54
		DAVE RICHARDS HOME B	20-623707-00	15.54
		DAVE RICHARDS HOMEBU	20-623735-00	11.46
		PELZEL, SHANE	20-680791-02	29.16
		TUMLIN, TRAVIS	20-682795-01	15.54
		ROEGES, RENEE	20-701190-14	65.54
		LADING, KEITH	20-701490-14	23.04
		OBERG, DEVIN	20-701690-10	62.73
		TRUMARK HOMES, LLC	20-713026-00	11.71
		DAVE RICHARDS HOMEBU	20-713041-00	12.34
		Y5 DEVELOPMENT	20-721019-00	15.54
		MIDWEST PUBLIC RISK	DENTAL	108.54
			OPEN ACCESS	100.90
			OPEN ACCESS	90.81
			OPEN ACCESS	123.61
			HSA	281.96
			HSA	539.62
			HSA	467.45
			VISION	12.38
			VISION	10.03
			VISION	12.89
			VISION	24.06
		HSA BANK	HSA - GRAIN VALLEY, MO	109.98
			HSA - GRAIN VALLEY, MO	431.97
		THE LINCOLN NATIONAL LIFE INSURANCE CO	JUNE 2020 DISABILITY	60.03
		CITY OF GRAIN VALLEY -FLEX	FLEX - DEPENDENT CARE	162.29
		ICMA RC	ICMA 457 %	200.82
			ICMA 457	186.46
			ICMA ROTH IRA	144.00
		MIDWEST PUBLIC RISK OF MO	FY 20-21 PRPERTY AND LIABI	1,305.78
			FY 20-21 PRPERTY AND LIABI	1,305.78
			FY 20-21 PRPERTY AND LIABI	7,189.67
			FY 20-21 PRPERTY AND LIABI	7,189.67
			FY 20-21 WORKERS COMP	25,870.71
		INTERNAL REVENUE SERVICE	FEDERAL WH	3,054.93
			SOCIAL SECURITY	1,974.91
			MEDICARE	461.89
			TOTAL:	56,585.58
WATER	WATER/SEWER FUND	NETSTANDARD INC	APR DATASAFE BACKUPS	350.00
			NETSTANDARD CLARITY	741.60
			05/12-06/11 OFFICE 365	295.20
		PEREGRINE CORPORATION	20 BILL PRINT & MAIL	594.60
			20 BILL PRINT & MAIL	113.57
		BATTS COMMUNICATIONS SERVICES INC	JUN 20 MAINTENANCE	50.00
		FELDMANS FARM & HOME	2"X50" DISCHARGE ASSEMBLY	34.39
		MISSOURI LAGERS	MONTHLY CONTRIBUTIONS	1,343.55
		VALLEY OUTDOOR EQUIPMENT	KIT/KEY SWITCH	19.92
		STANDARD INSURANCE CO	JUNE 20 STANDARD LIFE	99.93
		LOWES	MAGNETIC BOWL SET/COMM TR	7.71
		BLUE SPRINGS WINWATER CO	12X3/4 CC BR SADDLE C900	390.00
			12X3/4 CC BR SADDLE C900	390.00
		STEVEN SMITH	1000) #10 REGULAR ENVELOPE	37.50
		HAMPEL OIL INC	BULK GASOHOL/DIESEL	199.60
		HOME DEPOT CREDIT SERVICES	RADAR SQ EDGE CEILING/HDX	16.55
			RADAR SQ EDGE CEILING/HDX	14.63

DEPARTMENT	FUND	VENDOR NAME	DESCRIPTION	AMOUNT
		GOODYEAR COMMERCIAL TIRE	GY 235/85R16 ENDURANCE ST	47.53
		COMCAST	CITY HALL PHONE CHARGES	71.67
		MIDWEST PUBLIC RISK	DENTAL	43.50
			DENTAL	205.46
			OPEN ACCESS	237.86
			OPEN ACCESS	216.24
			OPEN ACCESS	156.41
			OPEN ACCESS	240.92
			HSA	664.72
			HSA	668.12
			HSA	929.34
			HSA	911.03
		HSA BANK	HSA - GRAIN VALLEY, MO	144.14
			HSA - GRAIN VALLEY, MO	454.61
		THE LINCOLN NATIONAL LIFE INSURANCE CO	JUNE 2020 DISABILITY	139.72
		JOHN DEERE FINANCIAL	WRENCH COMBO	8.00
		VERIZON WIRELESS	CELLULAR SERVICE 05/19-06/	145.26
			CELLULAR SERVICE 05/19-06/	15.07
		CINTAS CORPORATION # 430	PW/WOLTZ UNIFORMS	52.39
			PW/WOLTZ UNIFORMS	52.39
		PITNEY BOWES GLOBAL FINANCIAL SERVICES	QRTLY PYMNT 03/0820-06/07/	70.38
		EVERGY	825 STONEBROOK DR	32.84
			1301 TYER RD UNIT A	64.69
			618 JAMES ROLLO CT	119.73
			110 SNI-A-BAR BLVD	63.26
			1301 TYER RD UNIT B	172.90
			618 JAMES ROLLO CT UNIT B	1,806.11
			618 JAMES ROLLO CT	22.02
			711 MMAIN ST CITY HALL	138.56
			1012 STONEBROOK LN	35.48
		AUTOMATIC DOOR SYSTEMS LLC	CONTROLS FOR FRONT DOORS	562.15
		ARVEST BANK	TAKEUCHI LEASE/PURCHASE	6,105.54
		OAK GROVE RENTAL INC	DEMO HAMMER RENTAL	68.94
		NEPTUNE TECHNOLOGY GROUP INC	MEASUR CHMBR ASY/CONTROL B	116.65
		MIDWEST PUBLIC RISK OF MO	FY 20-21 PRPERTY AND LIABI	1,305.78
			FY 20-21 PRPERTY AND LIABI	7,189.68
			FY 20-21 WORKERS COMP	12,935.37
		CATHERINE V. BOWDEN	APR 2020 CONSULTING	75.00
		INTERNAL REVENUE SERVICE	SOCIAL SECURITY	987.44
			MEDICARE	230.95
			TOTAL:	42,206.60
SEWER	WATER/SEWER FUND	NETSTANDARD INC	APR DATASAFE BACKUPS	350.00
			NETSTANDARD CLARITY	741.60
			05/12-06/11 OFFICE 365	295.20
		PEREGRINE CORPORATION	20 BILL PRINT & MAIL	594.60
			20 BILL PRINT & MAIL	113.57
		BATTS COMMUNICATIONS SERVICES INC	JUN 20 MAINTENANCE	50.00
		FELDMANS FARM & HOME	2"X50" DISCHARGE ASSEMBLY	34.39
		MISSOURI LAGERS	MONTHLY CONTRIBUTIONS	1,343.51
		VALLEY OUTDOOR EQUIPMENT	KIT/KEY SWITCH	19.92
		CUES	STRAIN RELIEF, CBL, PLATIN	245.03
			SEWER CAMERA REPAIR	594.61
		STANDARD INSURANCE CO	JUNE 20 STANDARD LIFE	99.93
		LOWES	MAGNETIC BOWL SET/COMM TR	7.71
		STEVEN SMITH	1000) #10 REGULAR ENVELOPE	37.50

DEPARTMENT	FUND	VENDOR NAME	DESCRIPTION	AMOUNT
		HAMPEL OIL INC	BULK GASOHOL/DIESEL	199.60
		HOME DEPOT CREDIT SERVICES	RADAR SQ EDGE CEILING/HDX	16.55
			RADAR SQ EDGE CEILING/HDX	14.63
		GOODYEAR COMMERCIAL TIRE	GY 235/85R16 ENDURANCE ST	47.53
		COMCAST	CITY HALL PHONE CHARGES	71.67
		MIDWEST PUBLIC RISK	DENTAL	43.44
			DENTAL	205.53
			OPEN ACCESS	237.85
			OPEN ACCESS	216.22
			OPEN ACCESS	156.40
			OPEN ACCESS	240.93
			HSA	664.68
			HSA	668.07
			HSA	929.36
			HSA	911.02
		HSA BANK	HSA - GRAIN VALLEY, MO	144.15
			HSA - GRAIN VALLEY, MO	454.58
		THE LINCOLN NATIONAL LIFE INSURANCE CO	JUNE 2020 DISABILITY	139.72
		JOHN DEERE FINANCIAL	WRENCH COMBO	8.00
		VERIZON WIRELESS	CELLULAR SERVICE 05/19-06/	145.26
			CELLULAR SERVICE 05/19-06/	15.07
		CINTAS CORPORATION # 430	PW/WOLTZ UNIFORMS	52.39
			PW/WOLTZ UNIFORMS	52.39
		PITNEY BOWES GLOBAL FINANCIAL SERVICES	QRTLY PYMNT 03/0820-06/07/	70.38
		EVERGY	925 STONE BROOK DR	23.14
			WOODLAND DR	150.87
			405 JAMES ROLLO DR	217.95
			1326 GOLFVIEW DR SEWER	100.02
			618 JAMES ROLLO CT	119.73
			WINDING CREEK SEWER	23.18
			618 JAMES ROLLO CT	22.02
			711 MMAIN ST CITY HALL	138.56
			1201 SEYMOUR RD	23.14
			110 NW SNI-A-BAR BLVD	23.14
			1017 ROCK CREEK LN	23.14
		AUTOMATIC DOOR SYSTEMS LLC	CONTROLS FOR FRONT DOORS	562.15
		ARVEST BANK	TAKEUCHI LEASE/PURCHASE	6,105.54
		OAK GROVE RENTAL INC	DEMO HAMMER RENTAL	68.94
		MIDWEST PUBLIC RISK OF MO	FY 20-21 PRPERTY AND LIABI	1,305.78
			FY 20-21 PRPERTY AND LIABI	7,189.68
			FY 20-21 WORKERS COMP	12,935.37
		CATHERINE V. BOWDEN	APR 2020 CONSULTING	75.00
		INTERNAL REVENUE SERVICE	SOCIAL SECURITY	987.45
			MEDICARE	230.92
			TOTAL:	40,558.71

DEPARTMENT	FUND	VENDOR NAME	DESCRIPTION	AMOUNT

========== FUND TOTALS ==========

100	GENERAL FUND	283,820.04
200	PARK FUND	51,579.59
210	TRANSPORTATION	55,478.66
302	MKTPL TIF-PR#2 SPEC ALLOC	2,565.26
321	MKT PL CID-PR2 SALES/USE	2,747.51
600	WATER/SEWER FUND	139,350.89
	GRAND TOTAL:	535,541.95

TOTAL PAGES: 12

SELECTION CRITERIA

SELECTION OPTIONS

VENDOR SET: 01-CITY OF GRAIN VALLEY
VENDOR: All
CLASSIFICATION: All
BANK CODE: All
ITEM DATE: 5/16/2020 THRU 5/29/2020
ITEM AMOUNT: 99,999,999.00CR THRU 99,999,999.00
GL POST DATE: 0/00/0000 THRU 99/99/9999
CHECK DATE: 0/00/0000 THRU 99/99/9999

PAYROLL SELECTION

PAYROLL EXPENSES: NO
EXPENSE TYPE: N/A
CHECK DATE: 0/00/0000 THRU 99/99/9999

PRINT OPTIONS

PRINT DATE: None
SEQUENCE: By Department
DESCRIPTION: Distribution
GL ACCTS: NO
REPORT TITLE: C O U N C I L R E P O R T
SIGNATURE LINES: 0

PACKET OPTIONS

INCLUDE REFUNDS: YES
INCLUDE OPEN ITEM:YES

INTENTIONALLY LEFT BLANK

Presentations

INTENTIONALLY LEFT BLANK

Public Hearing

INTENTIONALLY LEFT BLANK

Ordinances

INTENTIONALLY LEFT BLANK

CITY OF GRAIN VALLEY BOARD OF ALDERMEN AGENDA ITEM		
MEETING DATE	5/27/2020, 6/8/2020	
BILL NUMBER	B20-12	
AGENDA TITLE	**AN ORDINANCE APPROVING THE FINAL DEVELOPMENT PLAN FOR THE LOFTS AT OLD TOWNE MARKET PLACE AND THE FINAL PLAT OF OLD TOWNE MARKET PLACE 12TH PLAT**	
REQUESTING DEPARTMENT	COMMUNITY DEVELOPMENT	
PRESENTER	MARK TROSEN, DIRECTOR	
FISCAL INFORMATION	Cost as recommended:	N/A
	Budget Line Item:	N/A
	Balance Available	N/A
	New Appropriation Required:	[] Yes [X] No
PURPOSE	To gain final development plan and final plat approval for the Lofts at Old Towne Market Place	
BACKGROUND	The BOA approved Ordinance 2496 on March 23, 2020 that changed the zoning on approximately 1.2 acres from Downtown Transition Zone to R-3p (Multi-Family Residential District-Planned Overlay District) and approximately 1.9 acres from C-1 (Central Business District) to R-3p (Multi-Family Residential District-Planned Overlay District. The BOA also approved the preliminary development plan.	
SPECIAL NOTES	None	
ANALYSIS	The final development plan is like the approved preliminary development plan and complies with the requirements of the City's land use regulations. The final plat meets all the requirements of the City's subdivision regulations. The City Engineer has approved the civil engineering plans.	

PUBLIC INFORMATION PROCESS	N/A
BOARD OR COMMISSION RECOMMENDATION	The Planning and Zoning Commission recommended approval at their May 13, 2020 meeting
DEPARTMENT RECOMMENDATION	Staff Recommends Approval
REFERENCE DOCUMENTS ATTACHED	Ordinance, Final Plat, Final Development Plan, Building Elevations, Application and Staff Report

CITY OF GRAIN VALLEY | **STATE OF MISSOURI**

BILL NO. *B20-12*

ORDINANCE NO. _____
SECOND READING _____
FIRST READING *May 27, 2020 (6-0)*

AN ORDINANCE APPROVING THE FINAL DEVELOPMENT PLAN FOR THE LOFTS AT OLD TOWNE MARKET PLACE AND THE FINAL PLAT OF OLD TOWNE MARKET PLACE 12TH PLAT

WHEREAS, the Mayor and the Board of Aldermen are committed to the development of the City; and

WHEREAS, a meeting was held on May 13, 2020 in which the Planning and Zoning Commission recommended that the Board of Aldermen approve the final development plan and final plat: and

WHEREAS, the Board of Aldermen is in acceptance of the final development plan and final plat, easements and right-of-way that are dedicated for public purposes.

NOW THEREFORE, BE IT ORDAINED by the Board of Aldermen of the City of Grain Valley, Missouri as follows:

SECTION 1: The Final Development Plan for the Lofts at Old Towne Market Place and the Final Plat of Old Towne Market Place 12th Plat are approved

SECTION 2: The property legally described below as Old Towne Market Place 12th plat:

Part of Lot 1, Old Towne Marketplace, a subdivision in the City of Grain Valley and that part of the Southwest quarter of the Southwest quarter of Section 35, Township 49, Range 30 and that part of the Southeast quarter of the Southeast quarter of Section 34, Township 49, Range 30, all in the City of Grain Valley, Jackson County, Missouri, more particularly described as; Commencing at the Northwest corner of the Southwest quarter of the Southwest quarter of said Section 35; thence South 01 degrees 45 minutes 46 seconds West, along the West line of said quarter quarter section, a distance of 239.67 feet, to a point on the South line of Lot 1, Old Town Marketplace-11th Plat, a subdivision of record, said point also being the Point of Beginning; thence South 88 degrees 02 minutes 31 seconds East, along the South line of Old Towne Marketplace-11th Plat, Old Towne Marketplace-9th Plat and Old Towne Marketplace-8th Plat, all subdivisions of record in said city, a distance of 332.60 feet, to the Southeast corner of Old Towne Marketplace-8th Plat, thence South 01 degrees 57 minutes 10 seconds West, a distance of 243.49 feet, to a point on the South line of Lot 1, Old Towne Marketplace, said point also being on the North line of Old Towne Marketplace-6th Plat; thence North 88 degrees 02 minutes 50 seconds West, along the North line of said Old Towne Marketplace-6th Plat, a distance of 447.48

feet, to the Northwest corner thereof, said point also being on the East Right-of-Way line of Garden Street; thence North 01 degrees 50 minutes 34 seconds East, along said East Right-of-Way line, a distance of 243.53 feet, to the Southwest corner of Old Towne Marketplace-11th Plat; thence South 88 degrees 02 minutes 31 seconds East, along the South line of said Old Towne Marketplace-11th Plat, a distance of 115.35 feet, to the Point of Beginning. Containing 109,021.87 sq.ft.

Read two times and PASSED by the Board of Aldermen this ___day of_____, *2020*, the aye and nay votes being recorded as follows:

ALDERMAN BASS	_____	ALDERMAN CLEAVER	_____
ALDERMAN HEADLEY	_____	ALDERMAN STRATTON	_____
ALDERMAN TOTTON	_____	ALDERMAN WEST	_____

Mayor _____ (in the event of a tie only)

Approved as to form:

_____
Lauber Municipal Law
City Attorney

_____
Mike Todd
Mayor

ATTEST:

_____
Jamie Logan
City Clerk

MINOR PLAT
OLD TOWNE MARKETPLACE-12TH PLAT, LOT 1
A Replat of part of Lot 1, Old Town Marketplace and Part of the SW 1/4 of the SW 1/4, of Sec. 35, Twn. 49, Rng. 30 and Part of the SE 1/4 of the SE 1/4, of Sec. 34, Twn. 49, Rng. 30
Grain Valley, Jackson County, Missouri

SURVEY NOTES:

1. △ Denotes Found Monumentation as noted.
2. Set 5/8" Iron Bar with Aluminum Cap at each "break point" of the plat boundary.
3. All rear lot corners to be set with 1/2" Iron Bars with plastic cap unless otherwise noted.
4. Curbs to be marked at extension of lot lines.
5. Street C/L to be marked with semi permanent monumentation.
6. The Parent Tract for this Survey is Document No. 2002100055576.
7. This Survey meets or exceeds the accuracy standards of an "Urban Property" Survey.
8. Bearings are based on Missouri State Plane Grid.
9. Title Report by First American Title, Guarantee No. TG 1535705, Dated Dec. 5, 2019, was used in in the preparation of this survey.
10. According the the U.S. Federal Emergency Management Agency's Flood Insurance Rate Map, Community Panel No. 29095C0339G, Effective January 20, 2017, this property lies within Zone "X", areas determined to be outside the 0.2% Annual Chance Floodplain, as shown thereon.

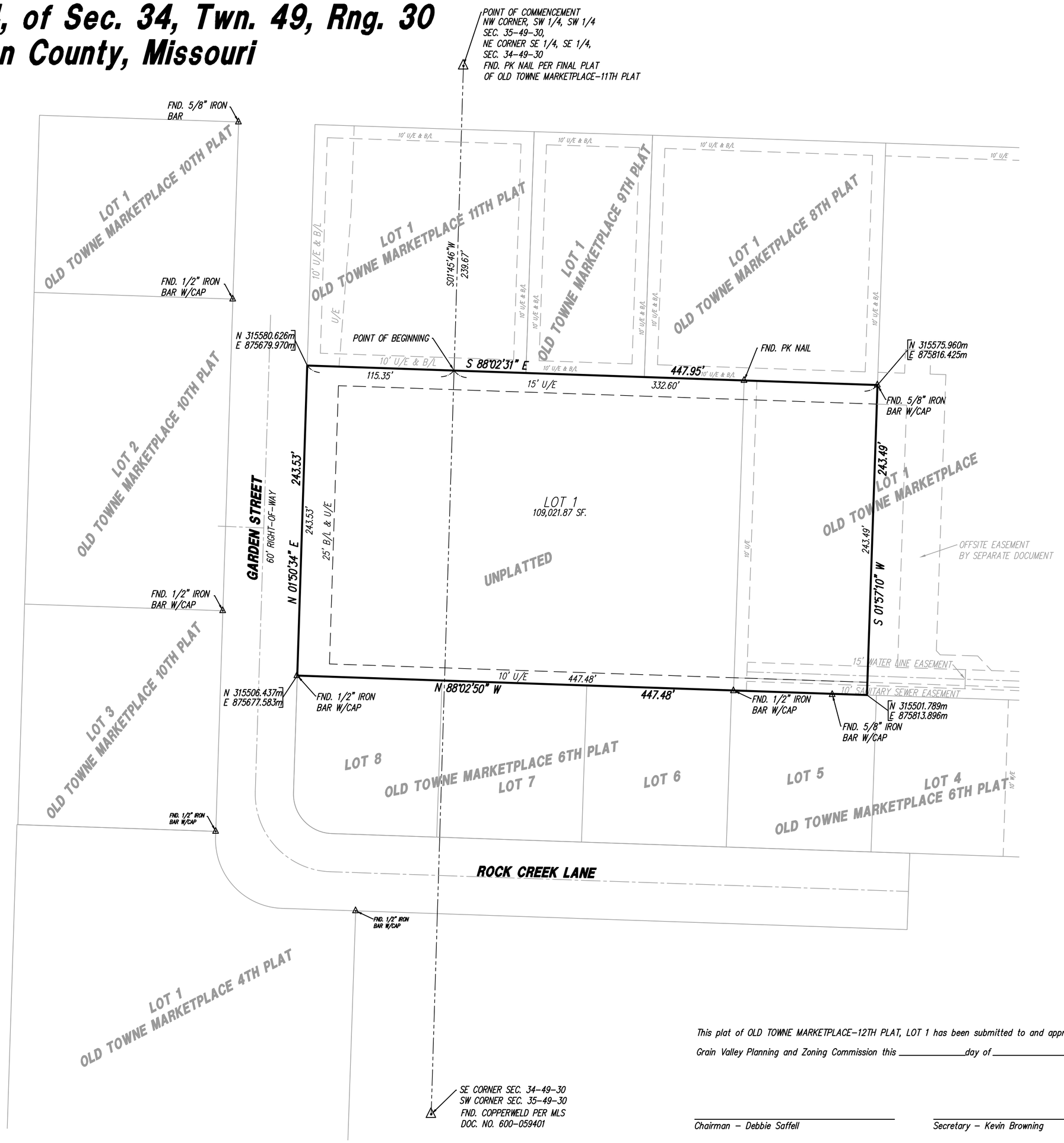

PROPERTY DESCRIPTION:

Part of Lot 1, Old Towne Marketplace, a subdivision in the City of Grain Valley and that part of the Southwest quarter of the Southwest quarter of Section 35, Township 49, Range 30 and that part of the Southeast quarter of the Southeast quarter of Section 34, Township 49, Range 30, all in the City of Grain Valley, Jackson County, Missouri, more particularly described as;

Commencing at the Northwest corner of the Southwest quarter of the Southwest quarter of said Section 35; thence South 01 degrees 45 minutes 46 seconds West, along the West line of said quarter quarter section, a distance of 239.67 feet, to a point on the South line of Lot 1, Old Town Marketplace-11th Plat, a subdivision of record, said point also being the Point of Beginning; thence South 88 degrees 02 minutes 31 seconds East, along the South line of Old Towne Marketplace-11th Plat, Old Towne Marketplace-9th Plat and Old Towne Marketplace-8th Plat, all subdivisions of record in said city, a distance of 332.60 feet, to the Southeast corner of Old Towne Marketplace-8th Plat, thence South 01 degrees 57 minutes 10 seconds West, a distance of 243.49 feet, to a point on the South line of Lot 1, Old Towne Marketplace, said point also being on the North line of Old Towne Marketplace-6th Plat; thence North 88 degrees 02 minutes 50 seconds West, along the North line of said Old Towne Marketplace-6th Plat, a distance of 447.48 feet, to the Northwest corner thereof, said point also being on the East Right-of-Way line of Garden Street; thence North 01 degrees 50 minutes 34 seconds East, along said East Right-of-Way line, a distance of 243.53 feet, to the Southwest corner of Old Towne Marketplace-11th Plat; thence South 88 degrees 02 minutes 31 seconds East, along the South line of said Old Towne Marketplace-11th Plat, a distance of 115.35 feet, to the Point of Beginning. Containing 109,021.87 sq.ft.

EASEMENTS:

An easement or license is hereby granted to the City of Grain Valley to locate, construct and maintain or to authorize the location, construction and maintenance of conduits, gas, water, sewer lines, poles, wires, anchors and surface drainage and all or any of them over, under and along the strips of land designated as "Utility Easement" or by the abbreviation of "U/E" on the accompanying plat. Areas designated as "Grading Easement" and "Drainage Easement" or by the abbreviation "G/E" and "D/E" shall be reserved exclusively for the purpose of storm water drainageway, grading, or for the purpose of constructing, maintaining, operating, removing and replacing storm water drainage facilities in accordance with plans and specifications approved by the City Engineer of the City of Grain Valley. No fence, wall, planting, building or other obstruction may be placed or maintained in said easement hereby dedicated and there shall be no alteration of the grades or contours in said easement without the approval of the City of Grain Valley. No obstruction may be placed in said drainageway which would prevent vehicles from travelling on said drainageway for maintenance purposes.
The Developer, Builder or Property Owner is prohibited from constructing or placing any structure, amenity, fence, retaining wall or landscape feature; or grading, altering, clearing or grubbing, improving the terrain or other natural features; or dumping any materials in the areas of land designated as "Conservation Easement" or by the abbreviation "C/E" on the accompanying plat unless prior written approval is provided by the City of Grain Valley.

STREETS:

Street right-of-way shown on the accompanying plat not heretofore dedicated to public use is hereby dedicated.

DEDICATION:

The undersigned proprietors of the above described tract of land have caused the same to be subdivided in the manner shown on the accompanying plat, which subdivision shall hereafter be known as "OLD TOWNE MARKETPLACE-12TH PLAT, LOT 1".

In testimony whereof: Old Towne Marketplace LLC.., a Missouri Limited Liability Company, has caused these presents to be signed by its members this _____ day of _____, _____.

_____
Member – David Ward

State of Missouri }
County of Jackson } SS

On this _____ day of _____, _____, before me personally appeared David Ward who being by me sworn did say that he is a Member of Old Towne Marketplace, LLC., a Missouri Limited Liability Company, and that said instrument was signed in behalf of said LLC by authority of its Members and to be the free act and deed of said LLC.

In witness whereof: I have hereunto set my hand and affixed my Notarial Seal at my office the day and year last above written.

_____
Notary Public in and for Jackson County, Missouri

N

50 0 50
SCALE IN FEET

KEY:

U/E = UTILITY EASEMENT
B/L = BUILDING LINE
G, D & U/E = GRADING, DRAINAGE & UTILITY EASEMENT
△ INDICATES FOUND 1/2" OR 5/8" IRON BAR, PLS 2006016633

N 317352.392m
E 874798.225m = MISSOURI STATE PLANE COORDINATES

MISSOURI STATE PLANE COORDINATES:

Missouri State Plane Coordinates, were obtained using KC Metro Control Monument, JA-11 Reset
Monument Coordinates = N 312,590.916 m
E 876,029.753 m
Grid Factor 0.9999089, Date 2003.

VICINITY MAP

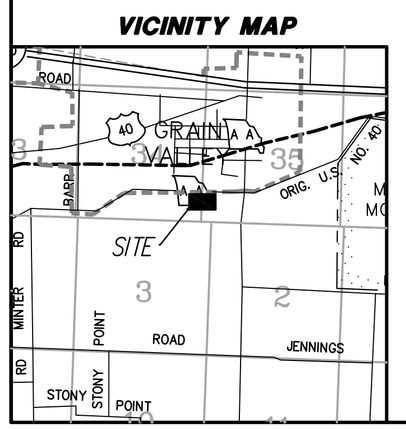

This plat of OLD TOWNE MARKETPLACE-12TH PLAT, LOT 1 has been submitted to and approved by the Grain Valley Planning and Zoning Commission this _____ day of _____, _____.

_____ Chairman – Debbie Saffell

_____ Secretary – Kevin Browning

These easements and rights-of-way accepted by the Governing Body of Grain Valley, Missouri this _____ day of _____, _____.

_____ Mayor – Mike Todd

Attest: _____ City Clerk – Theresa Osenbaugh

I hereby certify that the within plat of **OLD TOWNE MARKETPLACE-12TH PLAT, LOT 1** is based on an actual survey made by me or under my direct supervision and that said survey meets or exceeds the current MINIMUM STANDARDS FOR PROPERTY BOUNDARY SURVEYS as adopted by the Missouri Board for Architects, Professional Engineers, and Land Surveyors and the Missouri Department of Natural Resources further certify that the Section and Sectional Subdivision corner monuments and survey boundary corner monuments were either found or set as indicated on this plat; that I have with all State and City of GRAIN VALLEY statutes, ordinances and regulations governing the practice of surveying and platting of subdivisions to the best of my knowledge and belief.

Branton E. Ladwig, LS-2006016633
APRIL 21, 2020
IF THIS IS NOT A BLUE INK SEAL AND THE SIGNATURE IN BLUE INK, THIS PLAN IS A COPY AND MAY CONTAIN UNAUTHORIZED ALTERATIONS. THE CERTIFICATION CONTAINED ON THIS DOCUMENT SHALL NOT APPLY TO ANY COPIES.

LADWIG & ASSOCIATES, LLC.
LAND SURVEYORS
33604 E. 235th Street
Pleasant Hill, Missouri 64080
816-309-6621

Missouri Certificate of Authority
Land Surveying - LS-2012028511

OWNER
Ward Development
1120 NW Eagle Ridge Blvd.
Grain Valley, MO. 64029
Contact: Bryan Rahn
816-229-8115

APPROVED BY JACKSON COUNTY ASSESSOR:

By _____

Date _____

INTENTIONALLY LEFT BLANK

THE LOFTS AT OLD TOWNE MARKET PLACE

GRAIN VALLEY, JACKSON COUNTY, MISSOURI

FINAL DEVELOPMENT PLAN

GENERAL NOTES

1. See architectural submittal for all building dimensions, monument signs and lighting details.
2. See architectural/structural/mechanical/electrical drawings for miscellaneous site equipment and pads.
3. There shall be two way traffic movement.
4. All curb shall be CG-1 unless otherwise noted.
5. All sidewalk shall be ADA compliant
6. Handicap parking signs, 5' above finish grade, shall be placed at the head of the designated parking spaces.
7. ADA accessible ramp to have detectable surface on public handicap ramps only. Detectable surfaces do not need to be installed on the ramps at commercial drives. See KCAPWA web site for details.

CITY OF GRAIN VALLEY GENERAL NOTES

1. The contractor shall have one (1) signed copy of the plans (approved by the City of Grain Valley) and one (1) copy of the approved Construction Standards and Specifications at the job site at all times.
2. Construction of the improvements shown or implied by this set of drawings shall not be initiated or any part thereof undertaken until the City is notified of such intent, and all required and properly executed bonds and permit fees are received and approved by the City.
3. The City of Grain Valley plan review is only for general conformance with City of Grain Valley Criteria and the City Code. The City is not responsible for the accuracy and adequacy of the design, or dimensions and elevations, which shall be confirmed and correlated at the job site. The City of Grain Valley through approval of this document assumes no responsibility other than that as stated above for the completeness and/or accuracy of this document.
4. Development plans are approved initially for one (1) year after which they automatically become void and must be updated and re-approved by the City Engineer before any construction will be permitted.
5. All construction materials and methods used shall comply with the current City of Grain Valley standards and construction specifications.
6. All materials and workmanship associated with this project shall be subject to inspection by the City of Grain Valley. The City of Grain Valley reserves the right to accept or reject any such materials and workmanship that does not conform to the City Standards and Technical Specifications.
7. The Contractor shall satisfy himself as to the accuracy of all measurements prior to construction of any permanent structure.
8. The contractor shall notify the City of Grain Valley Engineering Services Department forty-eight (48) hours prior to beginning construction.
9. All existing utilities indicated on the drawings are according to the best information available to the Engineer; however, all utilities actually existing may not be shown. Utilities damaged through the negligence of the contractor to obtain the location of same shall be repaired or replaced by the contractor at his expense and with immediate notice to the City prior to repair or replacement.
10. Contractor shall not be allowed to work on Saturdays, Sundays or Holidays without prior approval by the City.
11. By use of these plans the Contractor agrees that he shall be solely responsible for the safety of the construction workers and the public.
12. The Contractor shall notify the engineer immediately of any discrepancies in the plans.
13. All fill areas indicated shall be compacted to 95% Standard Proctor Density at +/-2% optimum moisture content. Documentation shall be provided and approved by the City.
14. All ditch lines within the Street right of way shall be compacted to 95% Standard Proctor Density at +/- 2% optimum moisture content. Documentation shall be provided and approved by the City.
15. Excavation and the removal of existing paving and curbs may not be wasted on site and is to be hauled off by the contractor. Contractor to be responsible for the disposal of excess materials.
16. It shall be the responsibility of the Contractor to control erosion and siltation during all phases of construction. All areas disturbed by the contractor shall be sodded or seeded if approved by City unless otherwise noted on the plans.
17. Relocation of any water line, sewer line or service line thereof required for the construction of this project shall be the responsibility of the contractor at his expense and with prior notice to the City.
18. The Contractor shall be responsible for the removal and/or temporary mounting and replacement of all existing street marker signs, stop signs, speed limit and other traffic control signs affected by construction with prior notice to the City.
19. Storm sewer pipe under streets shall be reinforced concrete pipe with HDPE as a potential alternative at the discretion of the City.
20. All proposed and existing street crossings shall be tamped granular backfill (Type 3) from the bottom of the trench to a point that is 15" below the finished grade of the street. All existing street crossings shall be filled with flowable fill per detail STR-011.
21. Pipes that are to be encased and or anchored with concrete, the trench line is to remain open until the concrete has reached 2000 PSI or 7 days, whichever comes first.
22. The location of existing utilities as shown are approximate. It shall be the responsibility of the Contractor to verify the locations of all exiting utilities.
23. Contractor shall submit all Asphaltic Concrete and PCC mix designs to the City of Grain Valley for approval prior to the start of construction.

APPROVAL BLOCK. A signature block shall be required on the cover sheet of all plans and reports submitted for review and approval. All plans require the signature of the City Engineer and the date of such signing for formal approval by the City.

The general form of the approval block shall be as follows:

APPROVED

_____ _____

City of Grain Valley Date

APPROVED FOR ONE YEAR FROM THIS DATE

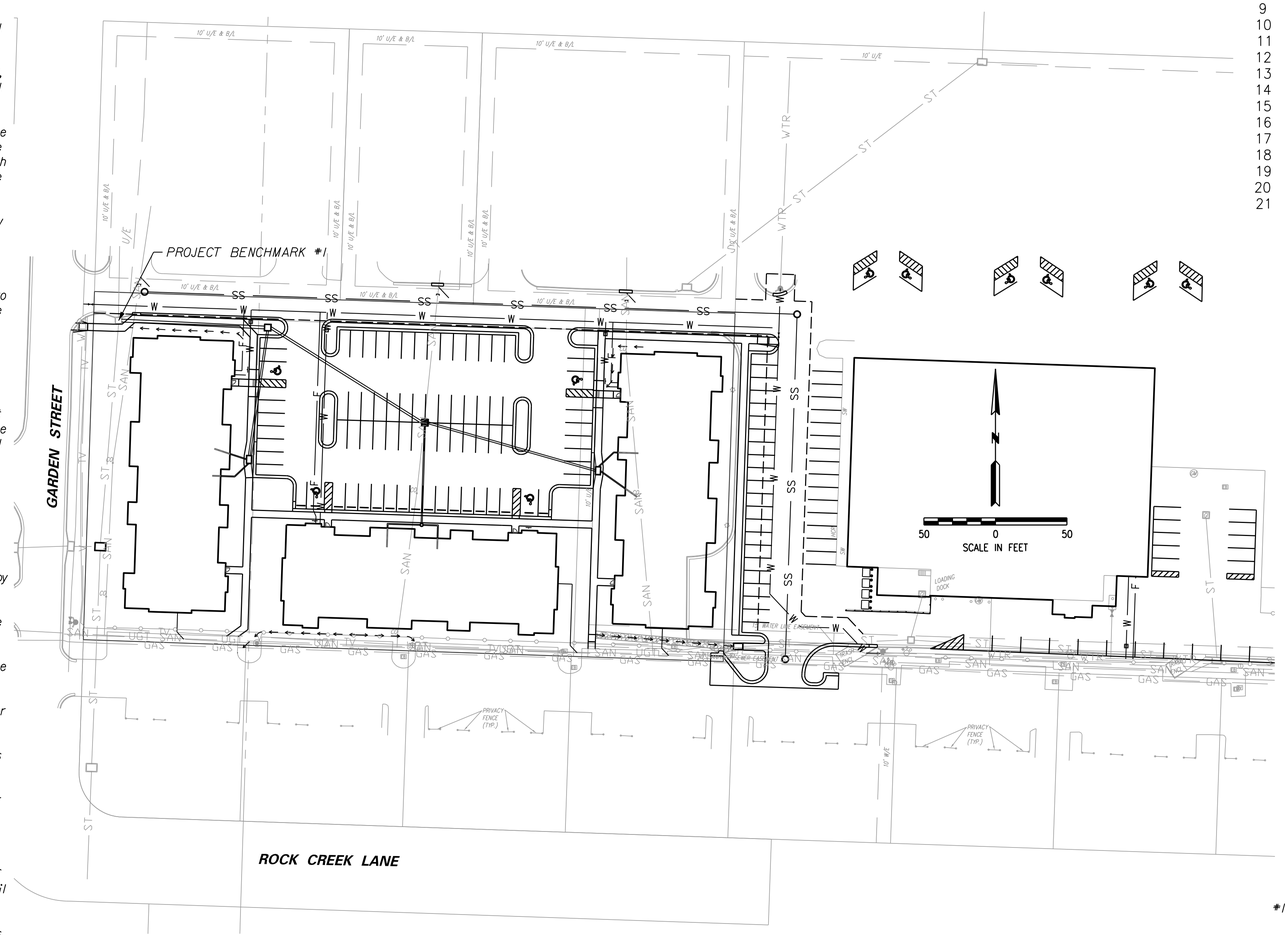

PLANS PREPARED FOR

WARD DEVELOPMENT
1120 NW EAGLE RIDGE BLVD
GRAIN VALLEY, MO 64029
CONTACT – BRYAN RAHN
816–985–2641

PLANS PREPARED BY

HG CONSULT
11010 HASKELL ST. STE. #210
KANSAS CITY, KS 66109
CONTACT – KEVIN STERRETT
816–703–7098

INDEX

FINAL DEVELOPMENT PLANS

1 COVER SHEET
2 DEMOLITION PLAN
3 DIMENSION PLAN
4 GRADING PLAN
5 SIDEWALK RAMP, CONCRETE FLUME, AND CURB CUT DETAILS
6 STORM SEWER PLAN AND PROFILE
7 DRAINAGE AREA MAP & STORM SEWER CALCS.
8 SANITARY SEWER AND WATER LINE GENERAL NOTES
9 SANITARY SEWER PLAN AND PROFILE
10 WATER LINE PLAN AND PROFILE
11 EROSION CONTROL PLAN
12 LANDSCAPE PLAN
13 SITE DETAIL SHEET
14 SANITARY SEWER DETAILS
15 SANITARY SEWER DETAILS
16 SANITARY SEWER DETAILS
17 WATER LINE DETAILS
18 WATER LINE DETAILS
19 WATER LINE DETAILS
20 WATER LINE DETAILS
21 PARKING STALL ANALYSIS

UTILITIES

City of Grain Valley
Department of Public Works
711 Main Street
Grain Valley, Mo.
816-847-6220

EVERGY
130 SE Hamblen Road
Lee's Summit, Mo.
816-347-4320

Missouri Gas Energy
3025 SE Clover Road
Lee's Summit, Mo.
816-537-4681

Tri-County Water Authority
28405 E. Blue Valley Road
Independence, Mo.
816-796-4160

AT&T
215 N. Spring
Independence, Mo.
816-325-5610

Time Warner
6550 Winchester Avenue
Kansas City, Mo.
913-643-1901

Comcast
New Construction Hotline
866-771-2281

Missouri One Call
1-800-344-7483

PROJECT BENCHMARK

#1 Top of Existing Curb Inlet near Northwest Corner of Property Corner
N: 1035349.15
E: 2872982.59
Top Elev. 783.4

VICINITY MAP

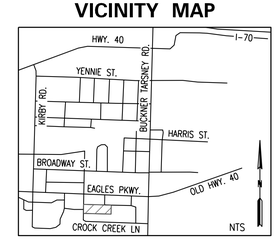

DATE	REVISION	NO.	BY	CK/APP

IF THIS IS NOT A BLUE INK SEAL AND THE SIGNATURE IS NOT IN BLUE INK, THE PLAN IS A COPY AND MAY CONTAIN UNAUTHORIZED ALTERATIONS. THE CERTIFICATION CONTAINED ON THIS DOCUMENT SHALL NOT APPLY TO ANY COPIES

STATE OF MISSOURI
R. KEVIN STERRETT
NO. E-26440
PROFESSIONAL ENGINEER

4/30/20

R. KEVIN STERRETT, MO E-26440

Consult Inc engineers planners

11010 Haskell St. Ste 210 Kansas City, KS 66109 816-759-2285 CORPORATE LICENSE No. E2010005873

COVER SHEET

THE LOFTS AT OLD TOWNE MARKET PLACE
GRAIN VALLEY - JACKSON COUNTY - MISSOURI

DATE
April 30, 2020

JOB NO.
19.068

SHEET 1 OF 21

4/30/2020
CoverSheet.dgn

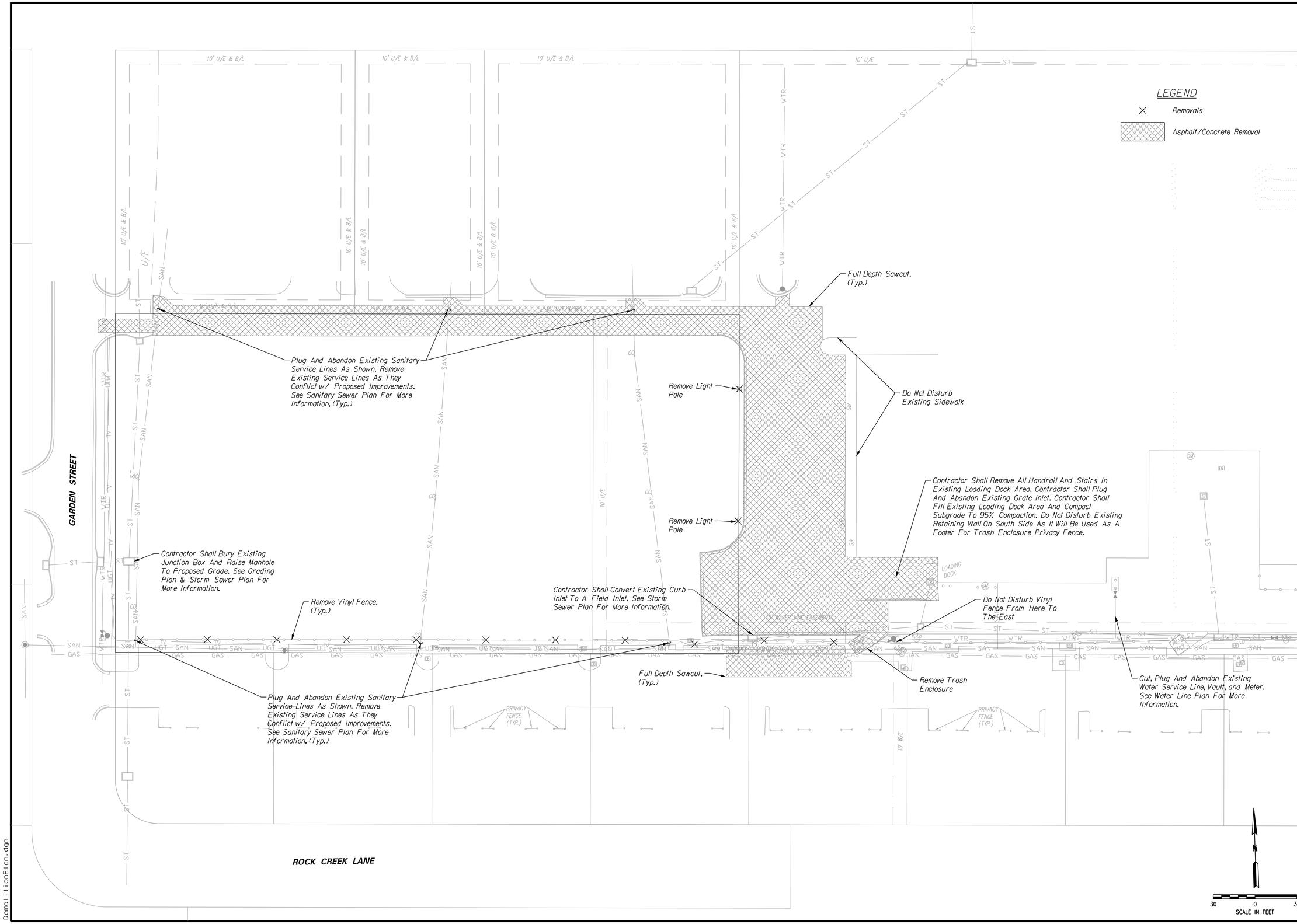

DATE	REVISION	NO.	BY	CK/APP

IF THIS IS NOT A BLUE INK SEAL AND THE SIGNATURE IS NOT IN BLUE INK, THE PLAN IS A COPY AND MAY CONTAIN UNAUTHORIZED ALTERATIONS. THE CERTIFICATION CONTAINED ON THIS DOCUMENT SHALL NOT APPLY TO ANY COPIES

STATE OF MISSOURI
R. KEVIN STERRETT
NO. E-26440
PROFESSIONAL ENGINEER

4/30/20

R. KEVIN STERRETT, NO E-26440

Consult Inc engineers planners
11010 Haskell St. Ste 210 Kansas City, KS 66109 816-759-2285 CORPORATE LICENSE No. E2010005873

DEMOLITION PLAN

THE LOFTS AT
OLD TOWNE MARKET PLACE
GRAIN VALLEY - JACKSON COUNTY - MISSOURI

DATE
April 30, 2020

JOB NO.
19.068

4/30/2020
DemolitionPlan.dgn

GENERAL NOTES:

1. All dimensions are to back of curb unless otherwise noted.
2. All curb radii within parking lot are 5' unless otherwise noted.
3. All sidewalks are 5' wide unless otherwise noted.
4. See Sidewalk Ramp, Concrete Flume, and Curb Cut Detail Sheet for dimensions and spot elevations for sidewalk ramps, concrete flumes, and curb cuts.
5. Contractor shall install wheel stops adjacent to building #1 where ribbon curb is installed. Coordinate w/ Owner for material and style.

SITE INFORMATION:

Site Address: TBD from City of Grain Valley
Zoning: R-3P
Lot Area: 109,022 SF (2.50 AC)
Building Area (GFA): +/- 37,200 SF
FAR: .34 to 1
Impervious Coverage: 81,920 SF, 75%
Parking Space Required:
See Parking Stall Analysis Sheet

PLAN LEGEND

- (1) # Of Parking Stalls
- CG-1 Curb & Gutter (See Detail Sheet)
- CG-1 "Dry" Curb & Gutter (See Detail Sheet)
- "Dry" Ribbon Curb (See Detail Sheet)
- Curb Transition Between Different Curb Types
- 5" PCC
- Light Duty Pavement (See Detail Sheet)
- Heavy Duty Pavement (See Detail Sheet)

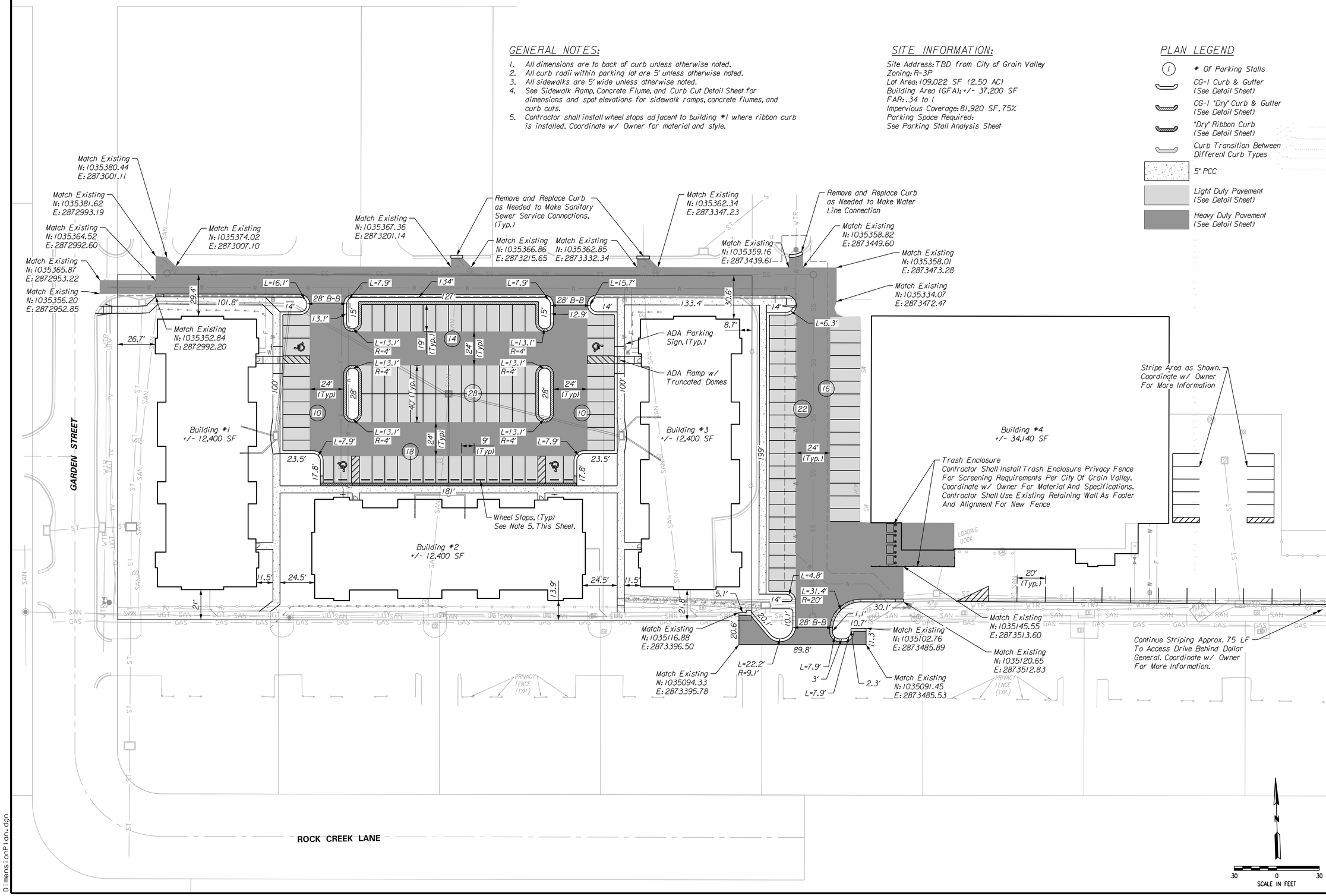

DATE	REVISION	NO.	BY	CK/APP

IF THIS IS NOT A BLUE INK SEAL AND THE SIGNATURE IS NOT IN BLUE INK, THE PLAN IS A COPY AND MAY CONTAIN UNAUTHORIZED ALTERATIONS. THE CERTIFICATION CONTAINED ON THIS DOCUMENT SHALL NOT APPLY TO ANY COPIES

STATE OF MISSOURI — R. KEVIN STERRETT — PROFESSIONAL ENGINEER

4/30/20

R. KEVIN STERRETT, MO E-26440

Consult inc engineers planners
11010 Haskell St. Ste 210 Kansas City, KS 66109 816-759-2285 CORPORATE LICENSE No. E2010005873

DIMENSION PLAN

THE LOFTS AT OLD TOWNE MARKET PLACE
GRAIN VALLEY - JACKSON COUNTY - MISSOURI

DATE: April 30, 2020
JOB NO.: 19.068

4/30/2020
DimensionPlan.dgn

GENERAL NOTES:

1. See detail sheet for pavement sections and details.
2. All slopes to be 3:1 max.
3. All dimensions are to back of curb unless otherwise noted.
4. See Sidewalk Ramp, Concrete Flume, and Curb Cut Detail Sheet for dimensions and spot elevations for sidewalk ramps, concrete flumes, and curb cuts.
5. Contractor shall grade a series of shallow "V" ditches to divert water away from buildings. See spot elevations below.

PLAN LEGEND

Spot Elevations

- TC Top Of Curb
- PV Top Of Pavement
- EG Existing Grade
- PG Proposed Grade
- SW Sidewalk
- HP High Point
- LP Low Point

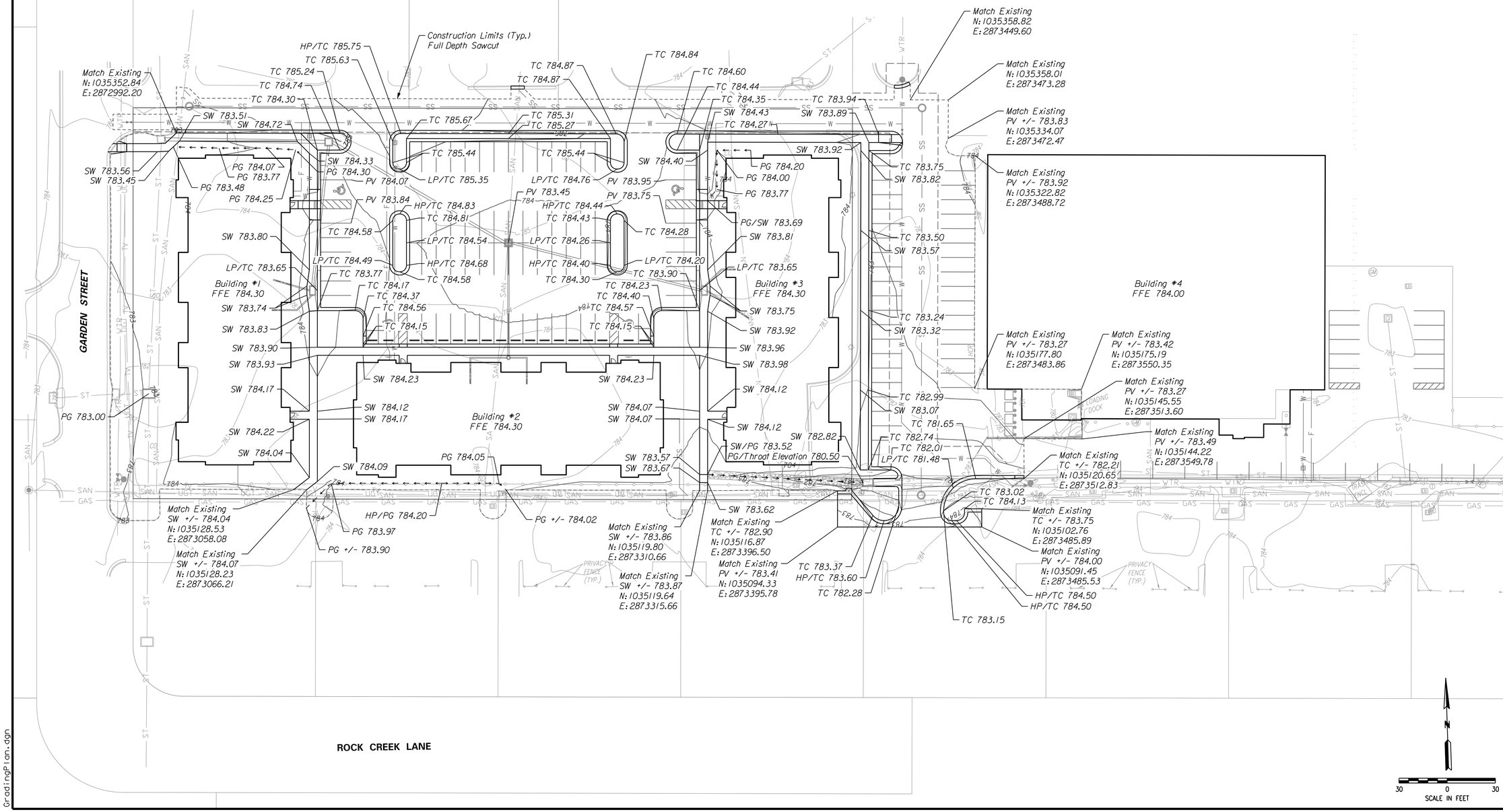

NO.	BY	CK/APP

DATE	REVISION

IF THIS IS NOT A BLUE INK SEAL AND THE SIGNATURE IS NOT IN BLUE INK, THE PLAN IS A COPY AND MAY CONTAIN UNAUTHORIZED ALTERATIONS. THE CERTIFICATION CONTAINED ON THIS DOCUMENT SHALL NOT APPLY TO ANY COPIES

STATE OF MISSOURI
REGISTERED PROFESSIONAL ENGINEER
4/30/20

R. KEVIN STERRETT, MO E-26440

Consult Inc engineers planners
11010 Haskell St. Ste 210 Kansas City, KS 66109 816-759-2285 CORPORATE LICENSE No. E2010005873

GRADING PLAN

THE LOFTS AT OLD TOWNE MARKET PLACE

GRAIN VALLEY - JACKSON COUNTY - MISSOURI

DATE April 30, 2020
JOB NO. 19.068

4/30/2020
GradingPlan.dgn

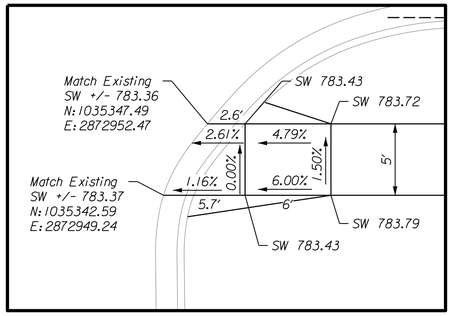

Detail 01

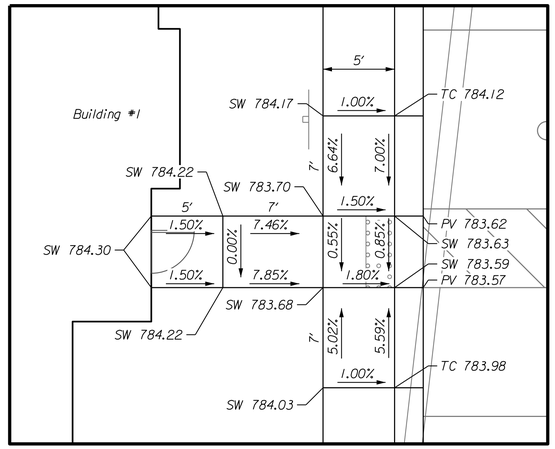

Detail 03

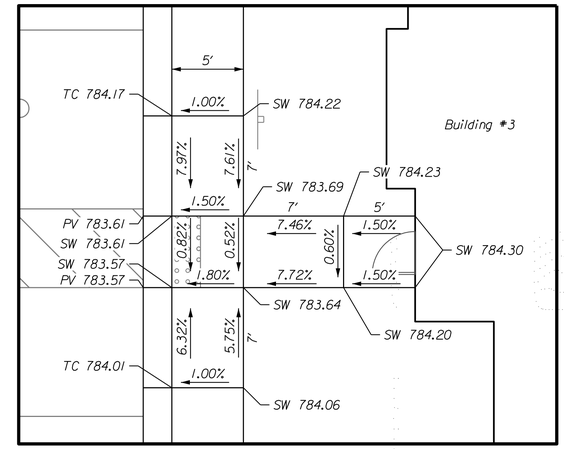

Detail 04

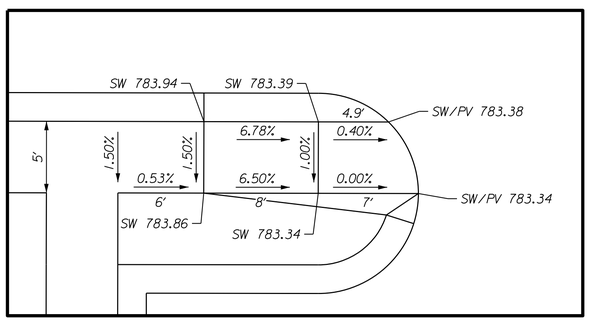

Detail 02

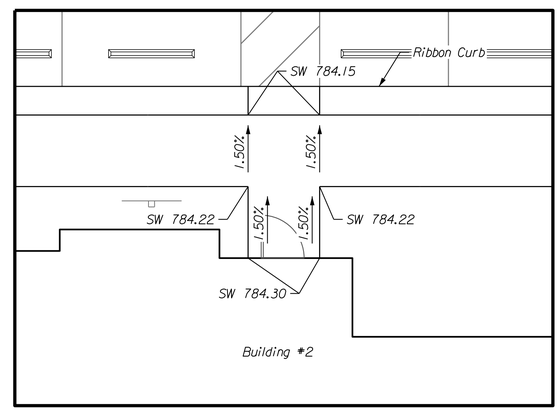

Detail 05

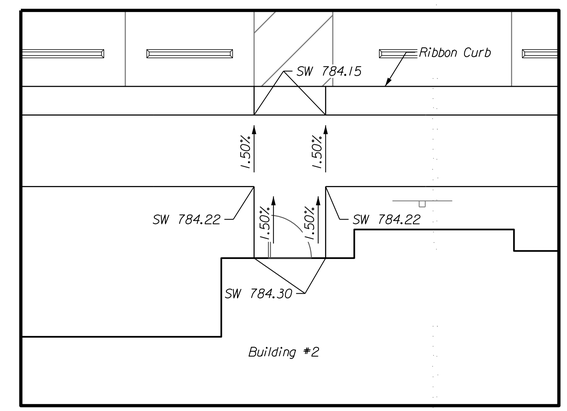

Detail 06

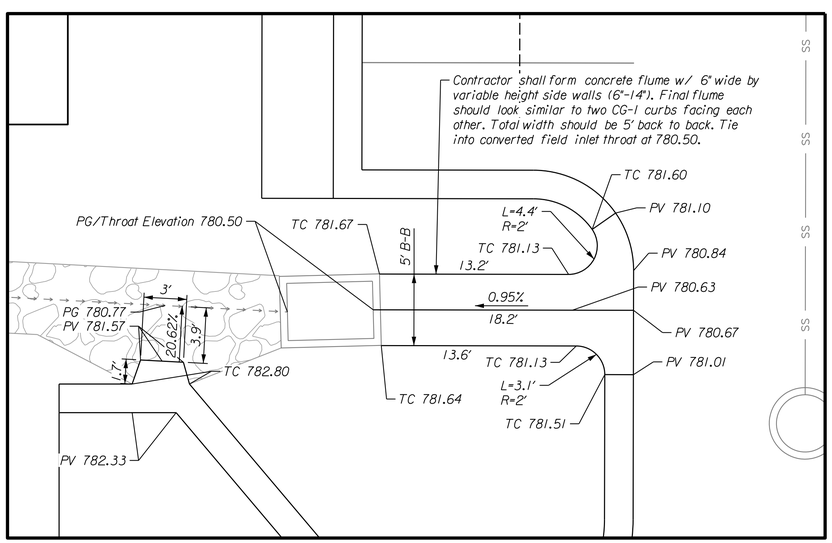

Detail 07

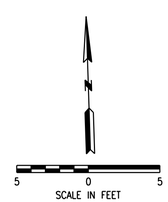

For all Detail Views

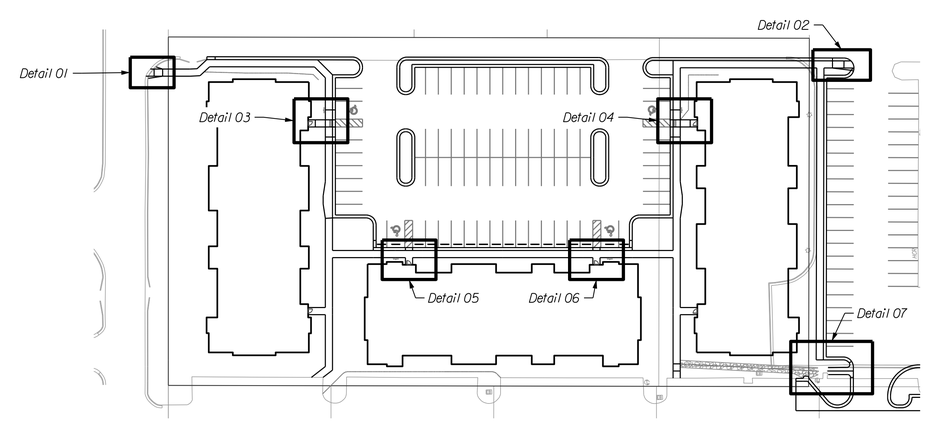

KEY MAP

Not to Scale

DATE	REVISION	NO.	BY	CK/APP

IF THIS IS NOT A BLUE INK SEAL AND THE SIGNATURE IS NOT A BLUE INK, THE PLAN IS A COPY AND MAY CONTAIN UNAUTHORIZED ALTERATIONS. THE CERTIFICATION CONTAINED ON THIS DOCUMENT SHALL NOT APPLY TO ANY COPIES

STATE OF MISSOURI
R. KEVIN STERRETT
NO. E-26440
PROFESSIONAL ENGINEER

4/30/20

R. KEVIN STERRETT, MO E-26440

Consult inc engineers planners
11010 Haskell St. Ste 210 Kansas City, KS 66109 816-759-2285 CORPORATE LICENSE No. E2010005873

SIDEWALK RAMP, CONCRETE FLUME, AND CURB CUT DETAILS

THE LOFTS AT OLD TOWNE MARKET PLACE

GRAIN VALLEY - JACKSON COUNTY - MISSOURI

DATE: April 30, 2020

JOB NO.: 19.068

SHEET 5 OF 21

4/30/2020
05-SiteDetails.dgn

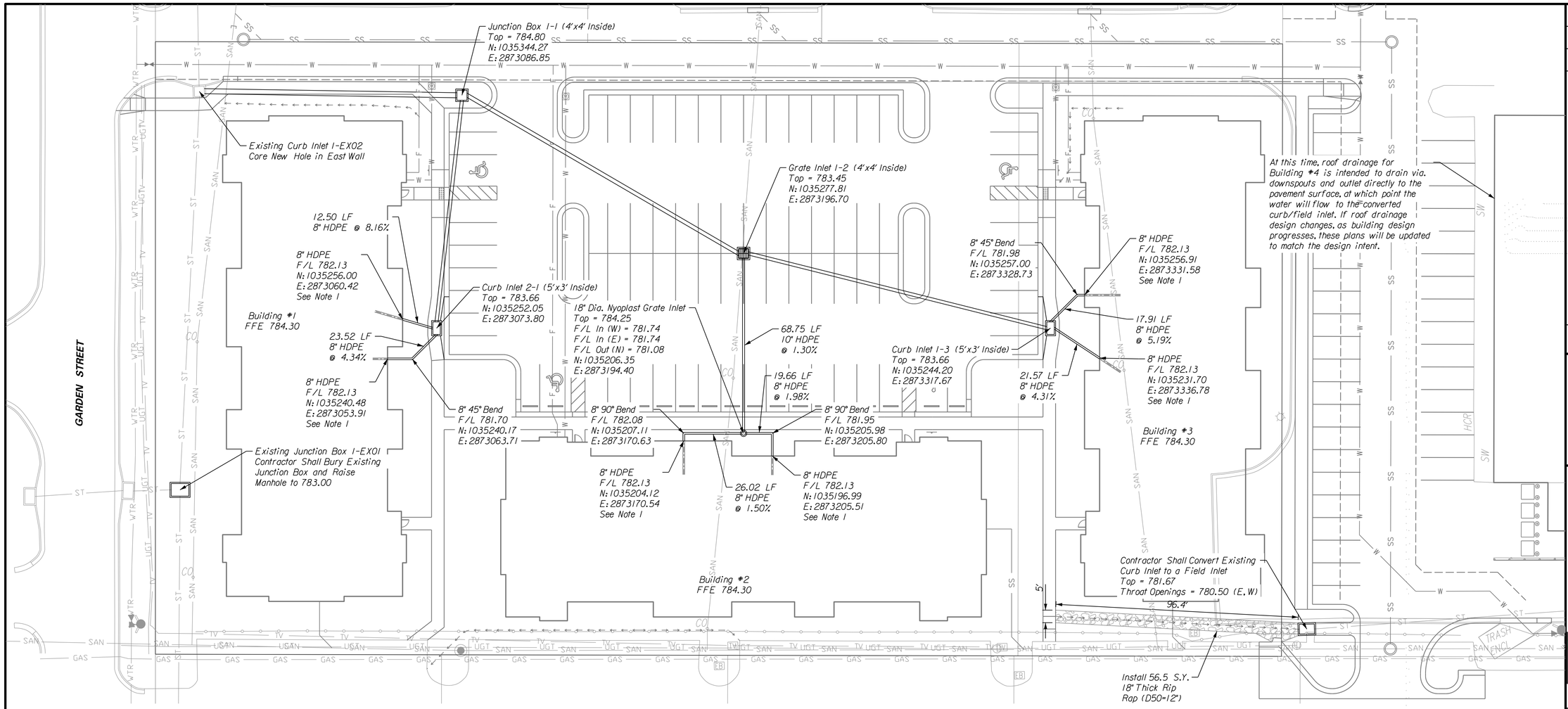

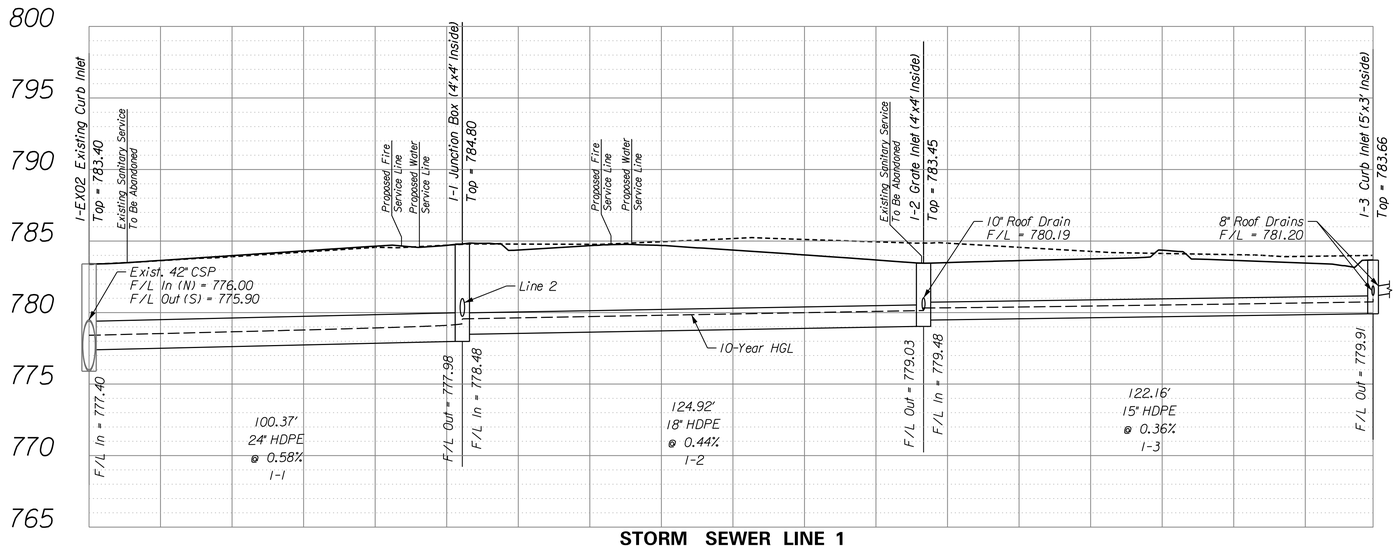

STORM SEWER LINE 1

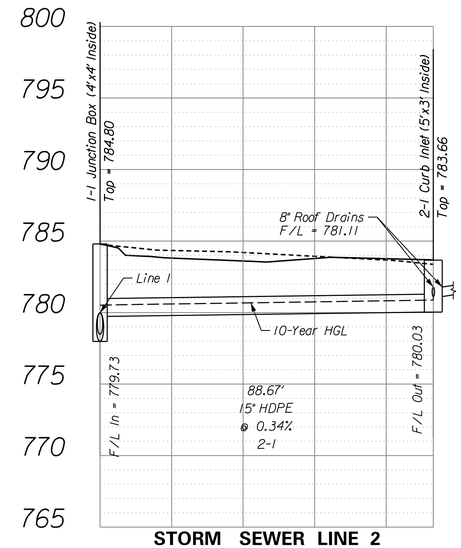

STORM SEWER LINE 2

GENERAL NOTES:

1. See MEP plans for 8" HDPE roof drain locations.
2. All HDPE pipe to be smooth interior unless otherwise noted.
3. There is no storm detention on this project. The storm design outlets into an existing 42" pipe that outlets into a regional detention pond just South of Rock Creek Lane.

SCALE IN FEET

20 0 20 40

PLAN: Lat. & Long.

PROFILE: Horiz. same as above

Vert.

5 0

DATE	REVISION	NO.	BY	CK/APP

IF THIS IS NOT A BLUE INK SEAL AND THE SIGNATURE IS NOT IN BLUE INK, THE PLAN IS A COPY AND MAY CONTAIN UNAUTHORIZED ALTERATIONS. THE CERTIFICATION CONTAINED ON THIS DOCUMENT SHALL NOT APPLY TO ANY COPIES

STATE OF MISSOURI
R. KEVIN STERRETT
NO. E-26440
PROFESSIONAL ENGINEER

4/30/20

R. KEVIN STERRETT, MO E-26440

Consult Inc
engineers
planners

CORPORATE LICENSE No. E2010005873

11010 Haskell St. Ste 210 Kansas City, KS 66109 816-759-2285

STORM SEWER PLAN AND PROFILE

THE LOFTS AT
OLD TOWNE MARKET PLACE

GRAIN VALLEY - JACKSON COUNTY - MISSOURI

DATE
April 30, 2020

JOB NO.
19.068

SHEET 6 OF 21

4/30/2020
StormSewerPlanProf.dgn

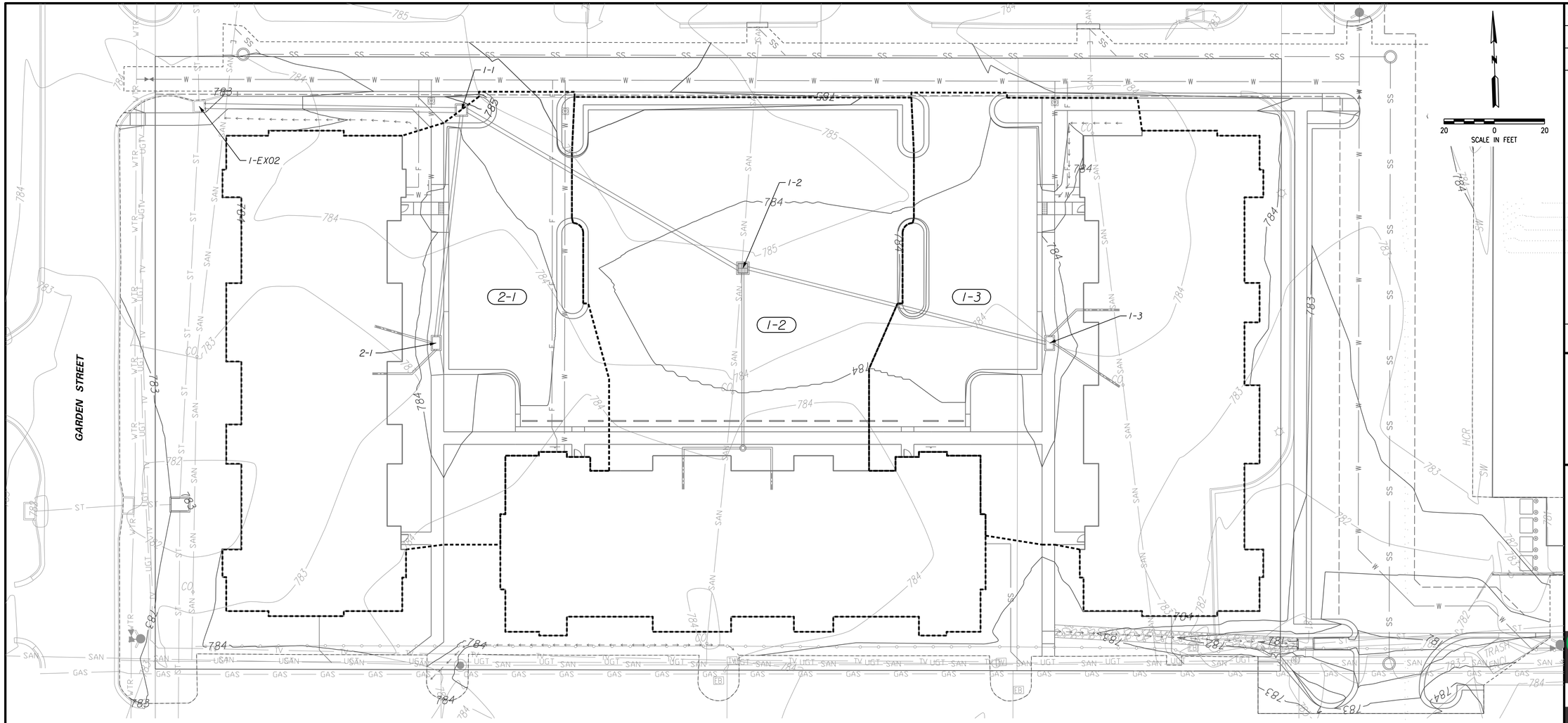

STORM SEWER CALCULATIONS

TYBROOK ESTATES PHASE 1A

STORM SEWER NO.	SEWER LOCATION		TRIBUTARY AREA (AC.)			COMPOSITE RUNOFF COEFFIEIENT	TIME OF CONCEN-TRATION	10-YEAR DESIGN (k = 1)										100-YEAR DESIGN (k = 1.25)									CURB INLET			PIPE DESIGN					
									RUNOFF [cfs]										RUNOFF [cfs]																
	FROM STRUCTURE NO.	TO STRUCTURE NO.	AREA DESIGNATION ACRES		TOTAL			INTENSITY [in/hr] i[10]	Q[10]	IN PIPE UPSTREAM [CFS]	BY PASS IN [CFS]	TOTAL Q[10]	IN PIPE DOWN-STREAM [CFS]	BY PASS OUT [CFS]	10-YR INLET CAPACITY [CFS]	10-YR SPREAD [FT]	10-YEAR HGL	INTENSITY [in/hr] i[10]	Q[100]	IN PIPE UPSTREAM [CFS]	BY PASS IN [CFS]	TOTAL Q[100]	IN PIPE DOWN-STREAM [CFS]	BY PASS OUT [CFS]	100-YR INLET CAPACITY [CFS]	100-YEAR HGL	GUTTER SLOPE [%]	GUTTER CAPACITY [CFS]	INLET LENGTH [FT]	PIPE SIZE [in]	PIPE SLOPE [%]	PIPE TYPE	ROUGH. COEFF. [MANN-INGS]	FULL VELOCITY [FPS]	FULL FLOW [CFS]
Line 1	1-3	1-2	1-3	0.58	0.58	0.88	5.00	7.38	3.77	0.00	0.00	3.77	3.77	0.00	19.55	1.92	781.11	10.20	6.51	0.00	0.00	6.51	6.51	0.00	19.55	782.63	N/A	N/A	4.00	15.00	0.36	HDPE	0.01	4.5	5.02
	1-2	1-1	1-2	0.69	1.27	0.81	5.00	7.38	4.12	3.77	0.00	7.89	7.89	0.00	24.70	15.18	780.32	10.20	7.13	6.51	0.00	13.63	13.63	0.00	24.70	781.43	N/A	N/A	4.00	18.00	0.44	HDPE	0.01	5.71	9.04
	1-1	1-EX02	N/A	N/A	1.84	N/A	N/A	N/A	N/A	11.59	0.00	11.59	11.59	0.00	N/A	N/A	779.49	N/A	N/A	20.03	0.00	20.03	20.03	0.00	N/A	779.95	N/A	N/A	4.00	24.00	0.58	HDPE	0.01	7.15	22.36
Line 2	2-1	1-1	2-1	0.57	0.57	0.88	5.00	7.38	3.70	0.00	0.00	3.70	3.70	0.00	19.55	1.90	781.59	10.20	6.40	0.00	0.00	6.40	6.40	0.00	19.55	782.29	N/A	N/A	4.00	15.00	0.34	HDPE	0.01	4.38	4.92

DATE	REVISION	NO.	BY	CK/APP

IF THIS IS NOT A BLUE INK SEAL AND THE SIGNATURE IS NOT IN BLUE INK, THE PLAN IS A COPY AND MAY CONTAIN UNAUTHORIZED ALTERATIONS. THE CERTIFICATION CONTAINED ON THIS DOCUMENT SHALL NOT APPLY TO ANY COPIES

STATE OF MISSOURI
R. KEVIN STERRETT
NUMBER E-26440
PROFESSIONAL ENGINEER

4/30/20

R. KEVIN STERRETT, MO E-26440

Consult Inc
engineers
planners

1010 Haskell St. Ste 210 Kansas City, KS 66109 816-759-2285 CORPORATE LICENSE No. E2010005873

DRAINAGE AREA MAP AND
STORM SEWER CALCULATIONS

THE LOFTS AT
OLD TOWNE MARKET PLACE
GRAIN VALLEY - JACKSON COUNTY - MISSOURI

DATE
April 30, 2020

JOB NO.
19.068

SHEET 7 OF 21

4/30/2020
StormSewerDrainageAreaMap.dgn

SANITARY SEWER GENERAL NOTES:

1. All sanitary stub lines shall be laid on 2.00% grade unless approved otherwise.
2. The Contractor shall install and properly maintain a mechanical plug at all connection points with existing lines until such time that the new line is tested and approved.
3. Where sanitary sewer lines are to be installed over and across water lines, a minimum of 24 inches of clearance shall be provided. Where clearance is not provided, construct sanitary sewer line of ductile iron pipe for a distance of at least 10 feet in each direction from crossing, with no joint within 6 feet of crossing.
4. Performance testing in accordance with APWA Section 2508. Witness and acceptance by City is required before placing in service.
5. All service lines shall be schedule 40 PVC.
6. All pre-cast manholes shall meet or exceed standards and specifications as set forth in ASTM C-478.
7. All PVC pipe shall meet or exceed standards and specifications as set forth in ASTM D-3034.
8. All proposed and existing street crossings shall be tamped granular backfill (Type 3) from the bottom of the trench to a point that is 15" below the finished grade of the street. All existing street crossings shall be filled with flowable fill per detail STR-011.
9. Mandrel testing is required and shall be performed in accordance with APWA 2508.5, at a minimum of 30 days after installation.
10. All inspection of sanitary sewer construction shall be performed by the City of Grain Valley.
11. It is the responsibility of the contractor to have sanitary sewer lines air tested and sanitary sewer manholes vacuum tested for new construction and modifications to existing. Contractor shall provide city with test results upon completion of construction.
12. Areas with less than three (3) feet of depth from existing grade to proposed top of pipe shall be filled to an elevation of three (3) feet above the proposed top of pipe, compacted to 95% density +/-2% prior to trenching or laying of any pipe.
13. Sanitary sewer piping material shall be as follows:

    0 to 15' depth; SDR-35 PVC
    15' to 22' depth; SDR-26 PVC
    22' to 30' depth; SDR-21 PVC
    greater than 30' depth; D.I.P.
    6" service laterals; SDR-35 PVC at 2.0% minimum.

14. All manholes, catch basins, utility valves, and meter pits shall be adjusted or rebuilt to grade as required.
15. Service lines shall be extended a minimum of 1 foot past the house side of all utility easements.
16. Insert Tee's or Saddles for service lines are not allowed except in special cases with prior City approval and City observation of installation.

WATER LINE GENERAL NOTES:

1. All ductile iron pipe shall be class 50 ductile iron pipe complete with all accessories conforming to ASA specifications A21.8. The joints shall be the bolted, gasketed joint type "U.S. Pipe & Foundry Tyton" or "American Cast Iron Pipe Company Fastite" or approved equal.
2. All PVC pipe shall comply with AWWA C-900 class DR 14 only, for 200 PSI service.
3. All water lines shall have a minimum of 42 inches of cover.
4. Fire hydrants shall be Waterous Pacer WB67 or Mueller A243 with nonrising stem. Hydrants shall have a 5 1/4" valve with a 4 1/2" pumper nozzle, and 2, 2 1/2" hose nozzles, left hand opening, or approved equal by the City of Grain Valley.
5. Gate valves shall be resilient type conforming to AWWA C-509 with mechanical joint end connections.
6. Valve boxes shall be approved by the City of Grain Valley, Missouri. All boxes to be installed out of the roadway.
7. Water line to be installed five feet back of curb unless noted.
8. All construction of water lines on this project shall be in accordance with Specifications and Procedural Requirements of the City of Grain Valley, Missouri and with the requirements of the Missouri Department of Health and Missouri Department of Natural Resources.
9. All bends in water lines shall have thrust blocking or field loc gaskets as required.
10. Restrained type joints utilized in place of backing and thrust blocks shall require manufacturing computations for number of restrained joints required for 150 PSI testing.
11. Water lines shall be hydrostatically tested for backing and leakage at 150 PSI per AWWA C-600. Disinfection (Chlorination) shall be done in accordance with AWWA C-651. City shall witness the above and shall receive acceptable results of bacteriologic tests before the line is placed in service. Hydrostatic testing requires 150 PSI for 2 hours.
12. The Contractor shall furnish and install all fittings required to provide proper horizontal and vertical alignment for new water mains, connections to existing water mains and installation of fire hydrants at the proper location and elevation.
13. The Contractor shall furnish and install all temporary blow-off assemblies, fittings, thrust blocking, and restraining devices required for temporary connections for flushing, pressure testing, chlorination, and de-chlorination of the new water mains. Prior to placing new mains into service the Contractor shall remove any corporation cocks used for testing or chlorination and replace them with tapered brass plugs.
14. Scheduling of water main shut offs and connection to existing mains shall be at the discretion of the City Public Works Department.
15. All fire hydrant branches shall be restrained using approved restraining devices. Hydrants shall be installed so that the centerline of the outlet nozzle is between eighteen and twenty-one inches (18"-21") above finished grade, or curb were applicable.
16. Sections of water main requiring multiple bends, such as cul-de-sacs, shall be restrained with approved joint restraining devices and straddle blocks.
17. Covers, lids, and standpipes on all abandoned valves shall be removed to at least two feet (2') below grade and the area shall be properly backfilled. In paved areas removal of valve lid and filling of valve box with concrete may be allowed at Public Works Department discretion.
18. The Contractor shall verify the outside diameter (O.D.) of the existing water main prior to scheduling connection. Provide transition couplings as required.
19. All existing water services being disconnected shall be disconnected at the corporation stop.
20. All proposed and existing street crossings shall be tamped granular backfill (Type 3) from the bottom of the trench to a point that is 15" below the finished grade of the street. All existing street crossings shall be filled with flowable fill per detail STR-011.

DATE	REVISION	NO.	BY	CK/APP

IF THIS IS NOT A BLUE INK SEAL AND THE SIGNATURE IS NOT IN BLUE INK, THE PLAN IS A COPY AND MAY CONTAIN UNAUTHORIZED ALTERATIONS. THE CERTIFICATION CONTAINED ON THIS DOCUMENT SHALL NOT APPLY TO ANY COPIES

STATE OF MISSOURI
R. KEVIN STERRETT
NUMBER E-26440
PROFESSIONAL ENGINEER

4/30/20

R. KEVIN STERRETT, MO E-26440

Consult Inc engineers planners
11010 Haskell St. Ste 210 Kansas City, KS 66109 816-759-2285 CORPORATE LICENSE No. E2010005873

SANITARY SEWER AND
WATER LINE GENERAL NOTES

THE LOFTS AT
OLD TOWNE MARKET PLACE
GRAIN VALLEY - JACKSON COUNTY - MISSOURI

DATE
April 30, 2020

JOB NO.
19.068

4/30/2020
Utility-Sanitary-Water-Notes.dgn

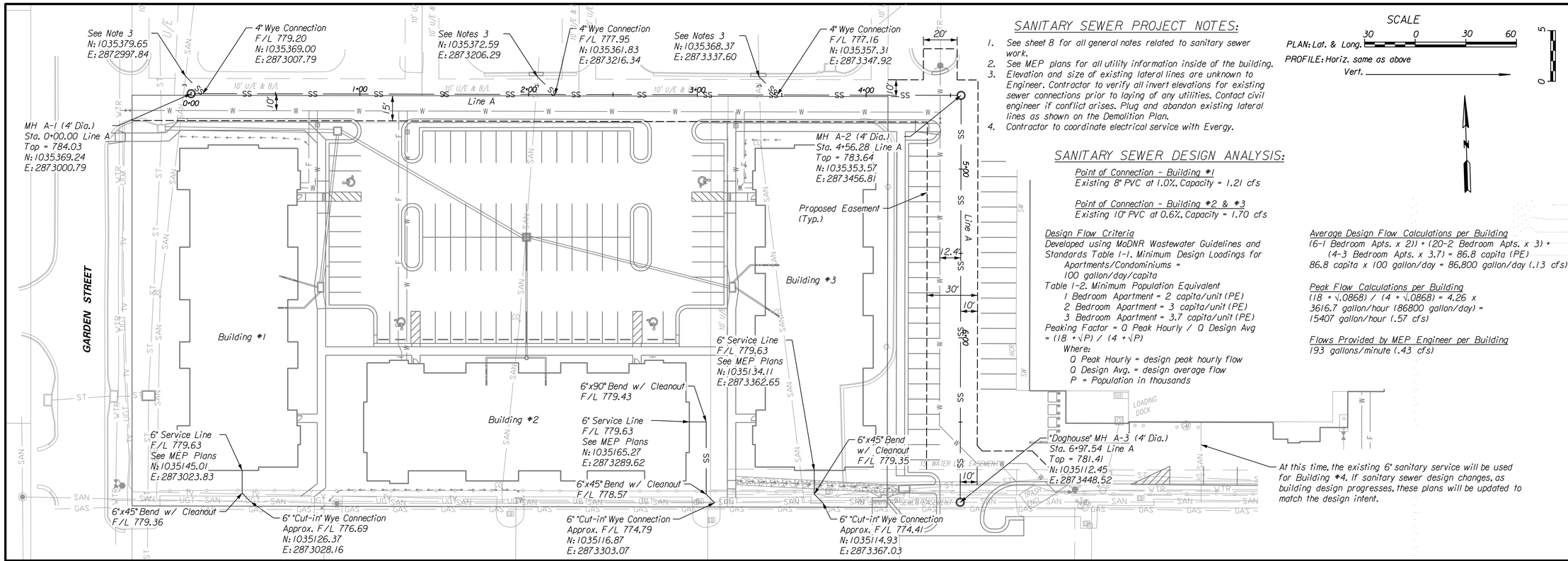

SANITARY SEWER PROJECT NOTES:

1. See sheet 8 for all general notes related to sanitary sewer work.
2. See MEP plans for all utility information inside of the building.
3. Elevation and size of existing lateral lines are unknown to Engineer. Contractor to verify all invert elevations for existing sewer connections prior to laying of any utilities. Contact civil engineer if conflict arises. Plug and abandon existing lateral lines as shown on the Demolition Plan.
4. Contractor to coordinate electrical service with Evergy.

SCALE

PLAN: Lat. & Long. 30 0 30 60

PROFILE: Horiz. same as above

Vert. 5 0

SANITARY SEWER DESIGN ANALYSIS:

Point of Connection - Building #1
Existing 8" PVC at 1.0%. Capacity = 1.21 cfs

Point of Connection - Building #2 & #3
Existing 10" PVC at 0.6%. Capacity = 1.70 cfs

Design Flow Criteria
Developed using MoDNR Wastewater Guidelines and Standards Table 1-1. Minimum Design Loadings for Apartments/Condominiums = 100 gallon/day/capita
Table 1-2. Minimum Population Equivalent
1 Bedroom Apartment = 2 capita/unit (PE)
2 Bedroom Apartment = 3 capita/unit (PE)
3 Bedroom Apartment = 3.7 capita/unit (PE)
Peaking Factor = Q Peak Hourly / Q Design Avg = (18 + √P) / (4 + √P)
Where:
Q Peak Hourly = design peak hourly flow
Q Design Avg. = design average flow
P = Population in thousands

Average Design Flow Calculations per Building
(6-1 Bedroom Apts. x 2)) + (20-2 Bedroom Apts. x 3) + (4-3 Bedroom Apts. x 3.7) = 86.8 capita (PE)
86.8 capita x 100 gallon/day = 86,800 gallon/day (.13 cfs)

Peak Flow Calculations per Building
(18 + √.0868) / (4 + √.0868) = 4.26 x 3616.7 gallon/hour (86800 gallon/day) = 15407 gallon/hour (.57 cfs)

Flows Provided by MEP Engineer per Building
193 gallons/minute (.43 cfs)

At this time, the existing 6" sanitary service will be used for Building #4. If sanitary sewer design changes, as building design progresses, these plans will be updated to match the design intent.

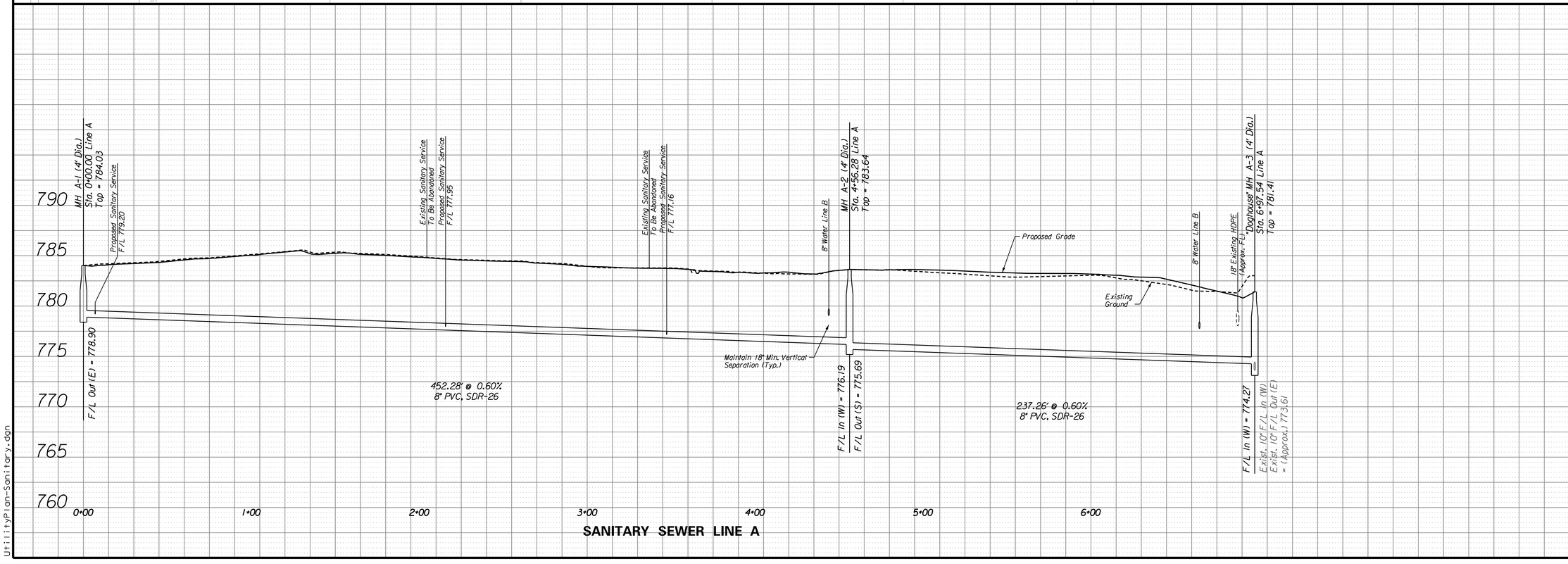

SANITARY SEWER LINE A

DATE	REVISION	NO.	BY	CK/APP

IF THIS IS NOT A BLUE INK SEAL AND THE SIGNATURE IS NOT IN BLUE INK, THE PLAN IS A COPY AND MAY CONTAIN UNAUTHORIZED ALTERATIONS. THE CERTIFICATION CONTAINED ON THIS DOCUMENT SHALL NOT APPLY TO ANY COPIES

STATE OF MISSOURI
R. KEVIN STERRETT
NUMBER E-26440
PROFESSIONAL ENGINEER

4/30/20

R. KEVIN STERRETT, MO E-26440

Consult Inc
engineers
planners

11010 Haskell St. Ste 210 Kansas City, KS 66109 816-759-2285 CORPORATE LICENSE No. E2010005873

SANITARY SEWER PLAN AND PROFILE

THE LOFTS AT
OLD TOWNE MARKET PLACE
GRAIN VALLEY - JACKSON COUNTY - MISSOURI

DATE
April 30, 2020

JOB NO.
19.068

SHEET 9 OF 21

4/30/2020
UtilityPlan-Sanitary.dgn

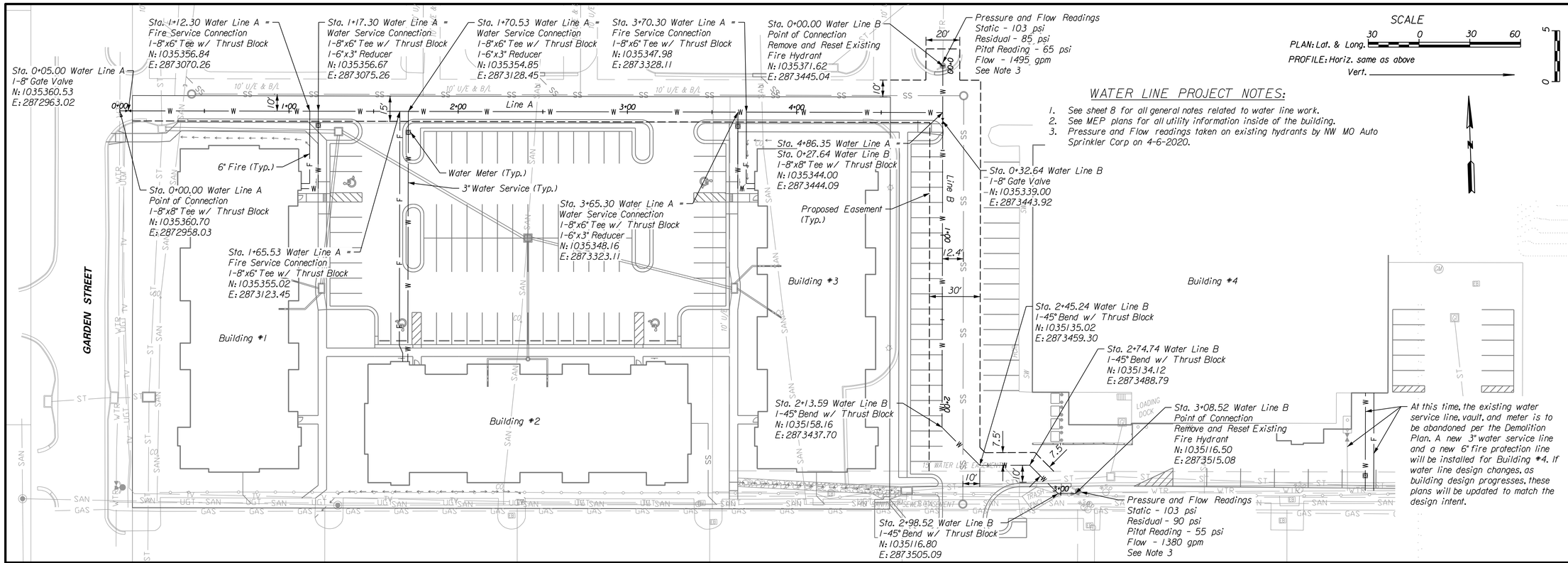

WATER LINE PROJECT NOTES:

1. See sheet 8 for all general notes related to water line work.
2. See MEP plans for all utility information inside of the building.
3. Pressure and Flow readings taken on existing hydrants by NW MO Auto Sprinkler Corp on 4-6-2020.

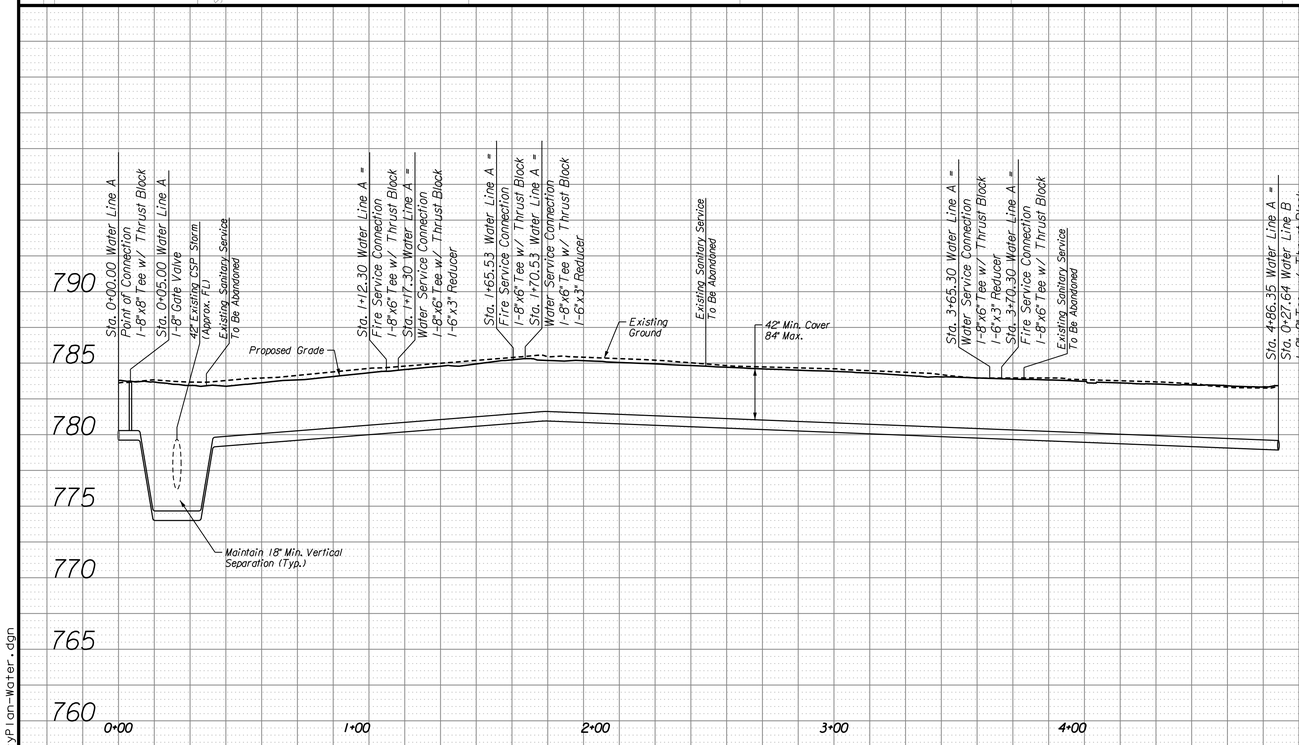

8" WATER LINE A

8" PVC (C-900)

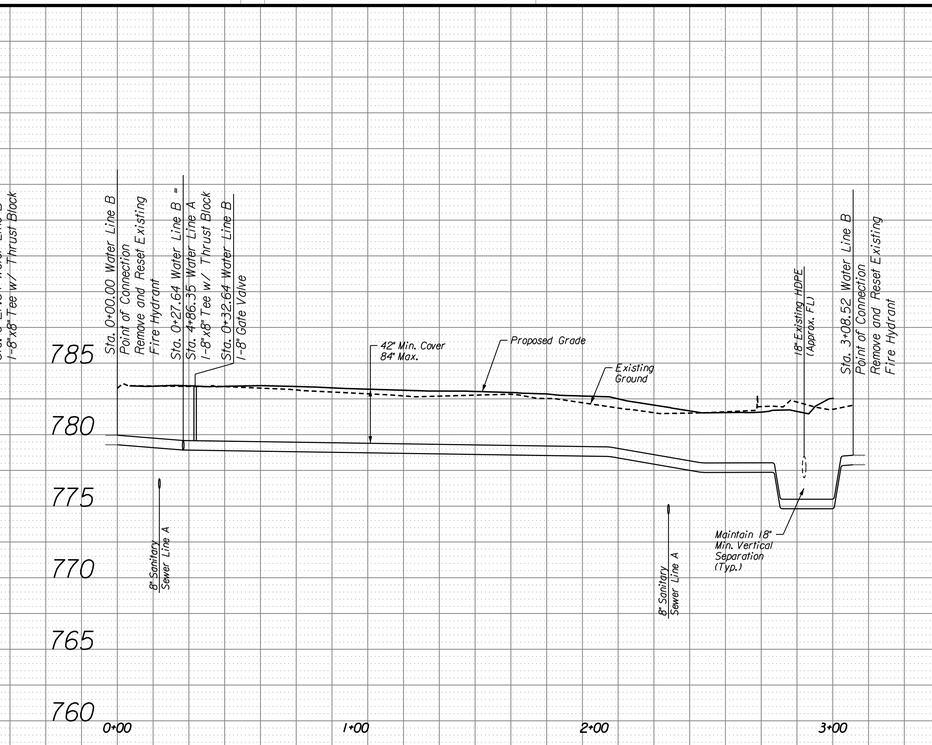

8" WATER LINE B

8" PVC (C-900)

DATE	REVISION	NO.	BY	CK/APP

IF THIS IS NOT A BLUE INK SEAL AND THE SIGNATURE IS NOT IN BLUE INK, THE PLAN IS A COPY AND MAY CONTAIN UNAUTHORIZED ALTERATIONS. THE CERTIFICATION CONTAINED ON THIS DOCUMENT SHALL NOT APPLY TO ANY COPIES

STATE OF MISSOURI
R. KEVIN STERRETT
NUMBER E-26440
PROFESSIONAL ENGINEER

4/30/20

R. KEVIN STERRETT, MO E-26440

Consult Inc engineers planners
11010 Haskell St. Ste 210 Kansas City, KS 66109 816-759-2285 CORPORATE LICENSE No. E2010005873

WATER LINE PLAN AND PROFILE

THE LOFTS AT
OLD TOWNE MARKET PLACE
GRAIN VALLEY - JACKSON COUNTY - MISSOURI

DATE
April 30, 2020
JOB NO.
19.068

4/30/2020
UtilityPlan-Water.dgn

GENERAL NOTES:

1. The contractor shall inspect, repair and add stone to the stone construction entrance when it becomes saturated with mud to ensure it functions as it was intended.
2. Any stockpiled topsoil shall be graded to drain and seeded with a temporary seed mix.
3. All erosion and sediment control devices shall be inspected, cleaned, and repaired in accordance with the Storm Water Pollution Prevention Plan.
4. Temporary sediment control measures (silt fence, construction entrance, etc..) shall be maintained until all contributing areas are graded and stabilized.
5. A complete plan for maintenance of control devices is contained within the Storm Water Pollution Prevention Plan which is part of the site work specifications.
6. Dust control on site shall be minimized by spraying water on dry areas of the site. The us of oils and other petroleum based or toxic liquids for dust suppression is strictly prohibited.
7. If the majority of mud or dirt is not removed from existing traffic, contractor shall establish vehicle wash ares at construction traffic exit points and vehicle operation shall be intercepted and trapped before wash water is allowed to be discharged off site. Rinse-off will not be allowed outside the project construction limits.
8. Repair eroded areas immediately, re-seed as necessary to maintain good vegetative cover. Mow vegetative cover to maintain a maximum height of six inches, and remove trash as needed.
9. Inspect and repair the collection system (i.e. catch basins, piping, swales, riprap, etc..) after significant rainfall to maintain proper function.
10. All existing structures, fencing, trees, etc... within the construction area shall be removed and disposed of off site per stat and local ordinances. Any burning on site shall be subject to local ordinances.
11. All wash water (concrete truck, vehicle cleaning, equipment cleaning, etc..) shall be disposed of in a manner that prevents contact between these materials and storm water that is discharged from the site.
12. All materials spilled, dropped, washed, or tracked from vehicles onto roadways or into storm drains must be removed immediately.
13. Contractor shall remove all temporary erosion control devices and dispose of per local codes once the site has been stabilized. Contractor shall refer to grading plan for final grades.
14. Land disturbing activities shall not commence until approval to do so has been received by governing authorities.
15. The general contractor shall strictly adhere to the SWPPP during construction operations.
16. No land clearing or grading shall begin until all erosion control measures have been installed.
17. All exposed areas shall be seeded as specified within 14 days of final grading. Should construction last for longer than 14 days, the site shall be seeded as specified.
18. After every significant runoff producing rainfall event of 1/2" or greater and at least once a week:
    A. Inspect the detention basin system for sediment accumulation, erosion, trash accumulation, vegetate cover, and general condition.
    B. Check and clear the outfall device of any obstructions.
19. This plan shall not be considered all inclusive as the general contractor shall take all necessary precautions to prevent soil sediment from leaving the site.
20. General contractor shall comply with all Stand and Local ordinances that apply.
21. Additional erosion and sediment control measures will be installed if deemed necessary by on site inspection.
22. If installation of storm drainage system should be interrupted by weather or nightfall, the pipe ends shall be covered with filter fabric.
23. General contractor shall be responsible to take whatever means necessary to establish permanent soil stabilization.
24. Additional erosion and siltation control methods and devices may be required as directed by the City or MoDNR.

PLAN LEGEND

- Temporary Stone Construction Entrance (APWA ESC-01)
- Silt Fence (APWA ESC-03)
- Storm Drain Inlet Protection (APWA ESC-06 & ESC-07 or approved equal)

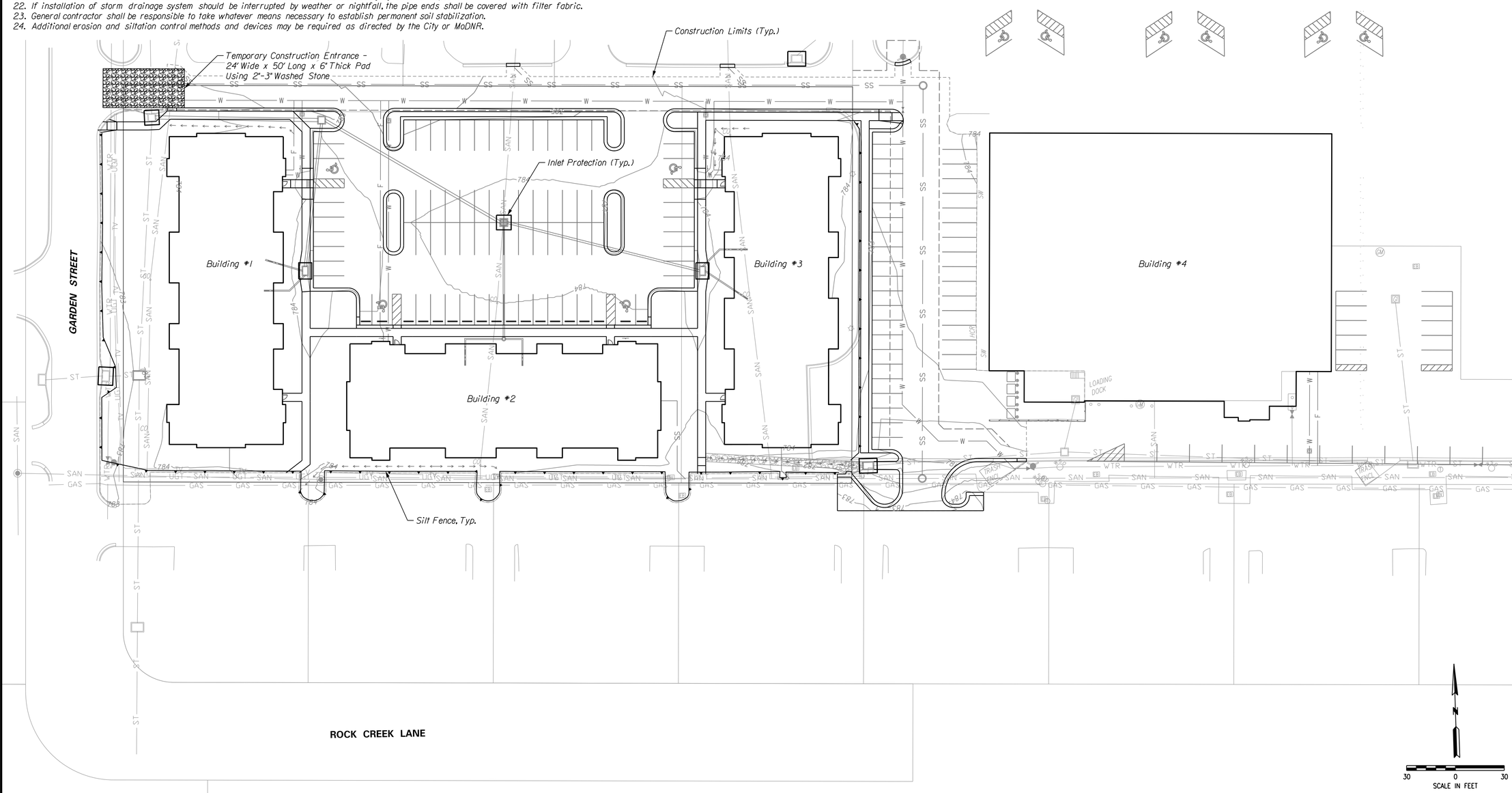

DATE	REVISION	NO.	BY	CK/APP

IF THIS IS NOT A BLUE INK SEAL AND THE SIGNATURE IS NOT IN BLUE INK, THE PLAN IS A COPY AND MAY CONTAIN UNAUTHORIZED ALTERATIONS. THE CERTIFICATION CONTAINED ON THIS DOCUMENT SHALL NOT APPLY TO ANY COPIES

STATE OF MISSOURI
R. KEVIN STERRETT
NO. E-26440
PROFESSIONAL ENGINEER

4/30/20

R. KEVIN STERRETT, MO E-26440

Consult Inc engineers planners
1010 Haskell St. Ste 210 Kansas City, KS 66109 816-759-2285 CORPORATE LICENSE No. E2010005873

EROSION CONTROL PLAN

THE LOFTS AT
OLD TOWNE MARKET PLACE
GRAIN VALLEY - JACKSON COUNTY - MISSOURI

DATE
April 30, 2020
JOB NO.
19.068

4/30/2020
ErosionControlPlan.dgn

GENERAL NOTES:

1. For proposed utility sizes see corresponding utility plans included in this set.

SITE INFORMATION:

Site Address: TBD from City of Grain Valley
Lot Area: 109,022 SF (2.50 AC)
Turf Area: 27,485 SF
Landscaped Area: 6,552 SF

PLANT SCHEDULE

SYMBOL	QTY	COMMON	BOTANICAL	
	13	Hornbeam, Frans Fontaine	Carpinus Betulus	10' wide x 30' tall
	13	Serviceberry, Robin Hill	Amelancher X Grandflora	12-15 wide x 20-25' tall
	140	Boxwood, Green Velvet	Buxus X 'Green Velvet'	2-4 wide x 2-4 tall
	49	Spirea	Spirea X Bumalda	2-10 tall and wide
	75	Karl Foerster Grass	Calamagrostis X Acutiflora	2' wide x 3' tall
	57	Daylily	Hermerocallis	similar to other ground cover

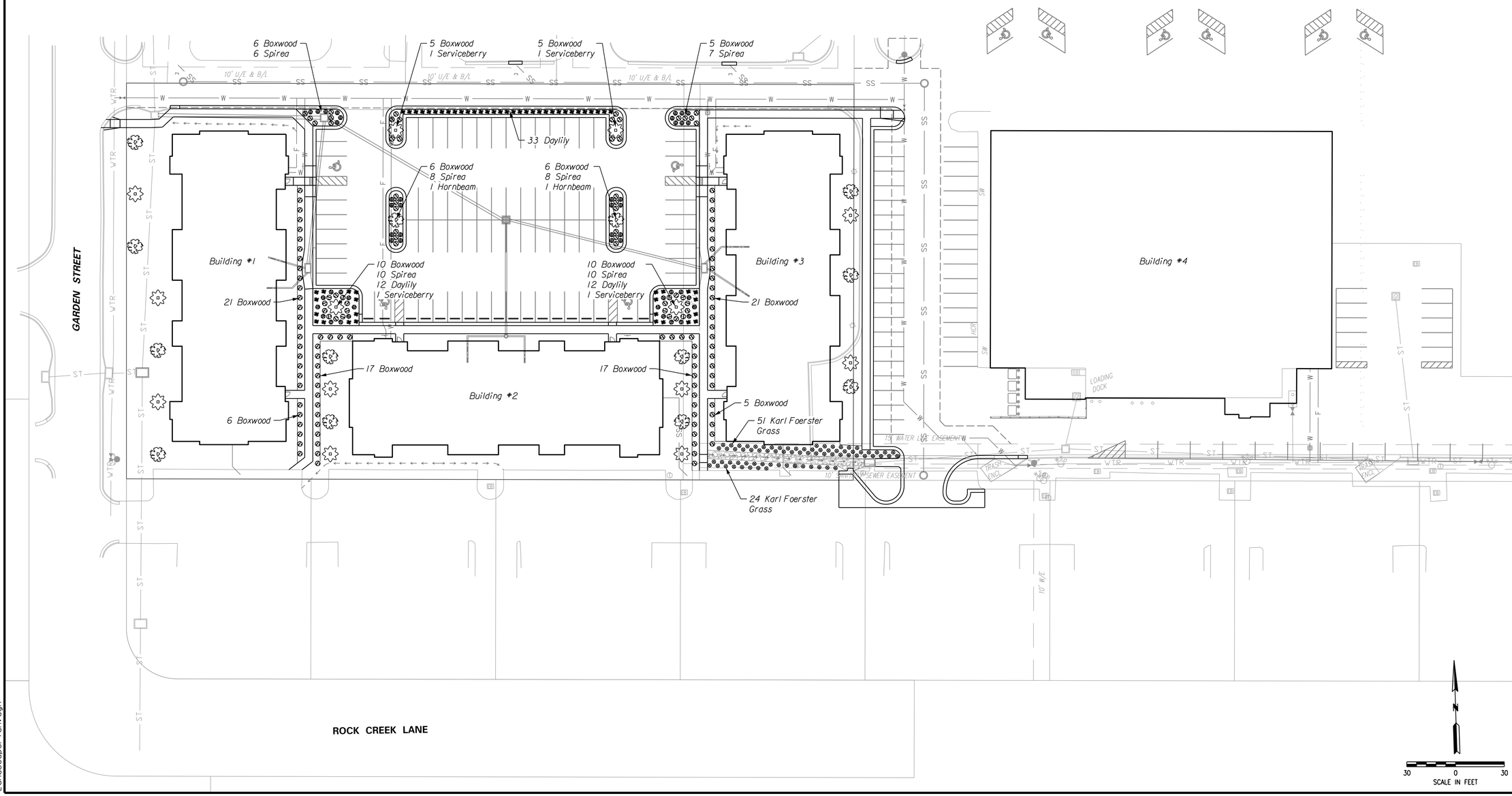

DATE	REVISION	NO.	BY	CK/APP

IF THIS IS NOT A BLUE INK SEAL AND THE SIGNATURE IS NOT IN BLUE INK, THE PLAN IS A COPY AND MAY CONTAIN UNAUTHORIZED ALTERATIONS. THE CERTIFICATION CONTAINED ON THIS DOCUMENT SHALL NOT APPLY TO ANY COPIES

STATE OF MISSOURI
R. KEVIN STERRETT
NO. E-26440
PROFESSIONAL ENGINEER

4/30/20

R. KEVIN STERRETT, MO E-26440

Consult Inc engineers planners
11010 Haskell St. Ste 210 Kansas City, KS 66109 816-759-2285 CORPORATE LICENSE No. E2010005873

LANDSCAPE PLAN

THE LOFTS AT
OLD TOWNE MARKET PLACE
GRAIN VALLEY - JACKSON COUNTY - MISSOURI

DATE
April 30, 2020
JOB NO.
19.068

4/30/2020
LandscapePlan.dgn

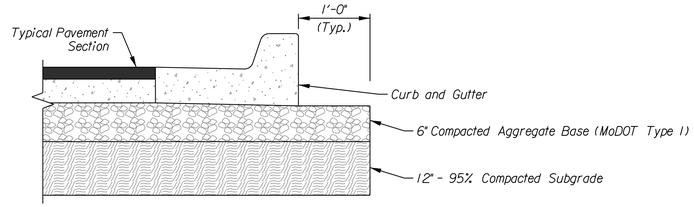

PAVING DETAIL
N.T.S.

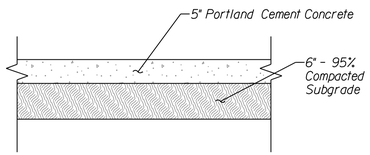

SIDEWALK SECTION
N.T.S.

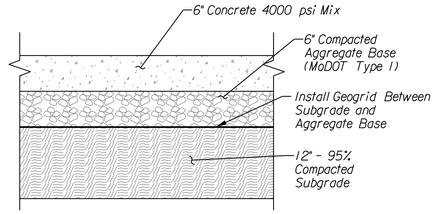

BID ALTERNATIVE #1
HEAVY DUTY CONCRETE
PAVEMENT SECTION
N.T.S.

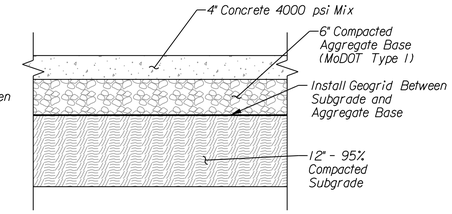

BID ALTERNATIVE #1
LIGHT DUTY CONCRETE
PAVEMENT SECTION
N.T.S.

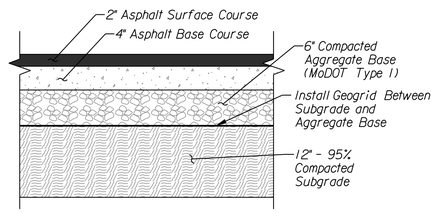

BID ALTERNATIVE #2
HEAVY DUTY ASPHALT
PAVEMENT SECTION
N.T.S.

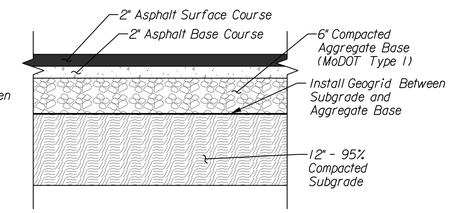

BID ALTERNATIVE #2
LIGHT DUTY ASPHALT
PAVEMENT SECTION
N.T.S.

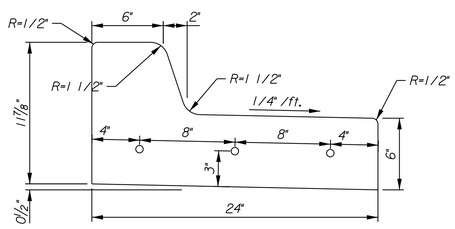

"DRY" STRAIGHT BACK CURB & GUTTER
(TYPE "DRY" CG-1)
N.T.S.

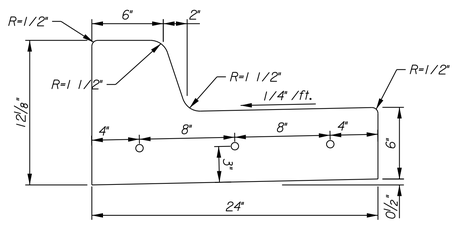

STRAIGHT BACK CURB & GUTTER
(TYPE CG-1)
N.T.S.

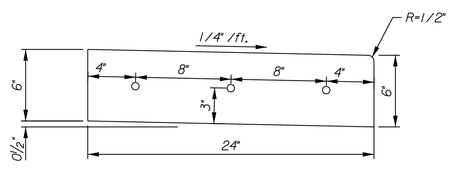

"DRY" RIBBON CURB
(TYPE "DRY" CG-1)
N.T.S.

CURB & GUTTER NOTES:
1. 3/4" Expansion joints with 2' epoxy-coated dowels shall be placed at radius points and at 150' intervals. These dowels shall be greased and wrapped on one end with expansion tubes.
2. 2" deep contraction joints shall be installed at approximately 10' intervals. These joints shall pass across the entire curb sections.
3. Fix dowels with bar chairs or equal.
4. Depth of curb shall be minimum of 8" through the handicap access ramp.

Colors
Legend and Border - Green
White Symbol on Blue Background
Background - White
(R7-8)

6"x12"
ACCESSIBLE SIGN DETAIL
N.T.S.

1. All signs should comply with U.S. Department of Transportation Federal Highway Administration's "Uniform Traffic Control Devices", and local codes as specified. Mount signs in accordance with manufacturer's instructions.

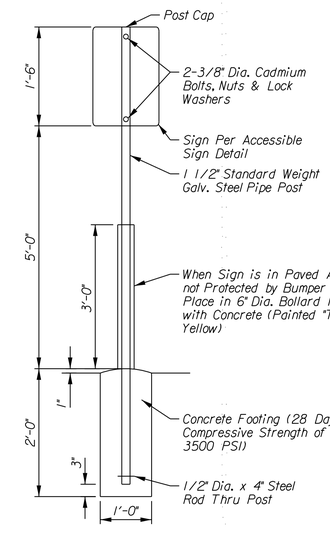

SIGN BASE
N.T.S.

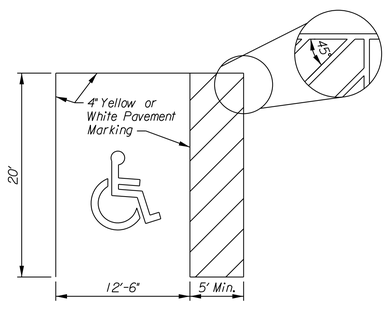

ACCESSIBLE STRIPING DETAIL
N.T.S.

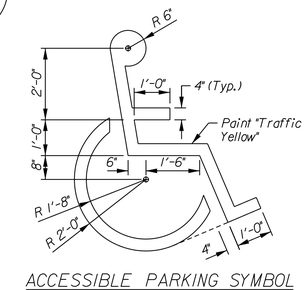

ACCESSIBLE PARKING SYMBOL
N.T.S.

NOTE: Symbol to be centered in parking space and oriented as illustrated on plans.

DATE	REVISION	NO.	BY	CK/APP

IF THIS IS NOT A BLUE INK SEAL AND THE SIGNATURE IS NOT IN BLUE INK, THE PLAN IS A COPY AND MAY CONTAIN UNAUTHORIZED ALTERATIONS. THE CERTIFICATION CONTAINED ON THIS DOCUMENT SHALL NOT APPLY TO ANY COPIES

STATE OF MISSOURI
R. KEVIN STERRETT
NUMBER E-26440
PROFESSIONAL ENGINEER
4/30/20

R. KEVIN STERRETT, MO E-26440

Consult engineers inc planners
1010 Haskell St. Ste 210 Kansas City, KS 66109 816-759-2285 CORPORATE LICENSE No. E2010005873

SITE DETAIL SHEET

THE LOFTS AT
OLD TOWNE MARKET PLACE
GRAIN VALLEY - JACKSON COUNTY - MISSOURI

DATE
April 30, 2020
JOB NO.
19.068

4/30/2020
Details-01.dgn

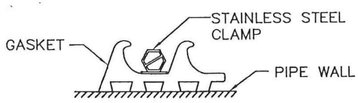

WATERSTOP GASKET

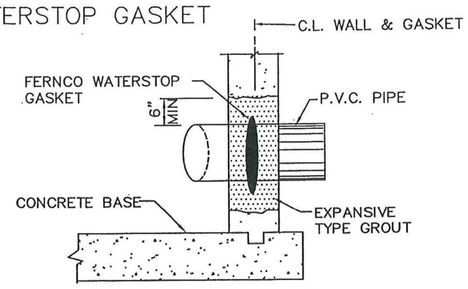

DIMENSION TABLE FOR WATERSTOP GASKET	
NOMINAL PIPE SIZE	GASKET INSIDE DIA.
4	3.8
6	5.7
8	7.8
10	9.9
12	14.7
15	14.7

NOTES:

1. WATERSTOP GASKET – GASKET CROSS SECTION SHALL BE EQUAL TO HAMILTON KENT DIE NO. 2347.
2. CLAMP – CLAMPS SHALL BE WORM DRIVE WITH 3/8" HEX HEAD SLOTTED SCREW WITH 9/16" WIDE BAND WHICH IS CONTINUOUSLY GEAR SLOTTED ALL AROUND. CLAMPS SHALL BE ALL STAINLESS STEEL–BAND AND A HOUSING OF 300 SERIES AND WORM SCREW OF 400 SERIES S.S. CLAMPS SHALL BE EQUAL TO IDEAL, 64 SERIES OR 68 SERIES, 0.024" THICK.
3. INSTALLATION – STRETCH GASKET AND SLIP OVER PIPE INTO POSITION. PLACE CLAMP OVER GASKET AS SHOWN ABOVE AND TIGHTEN WORM DRIVE TO 10'–LBS. TORQUE. ENCASE IN EXPANSIVE TYPE CEMENT GROUT FOR 4" MIN. COVER ALL AROUND. GROUT SHALL BE A METALLIC ADDITIVE NON–SHRINK TYPE EQUAL TO MASTER BUILDERS "EMBECO"

WATERSTOP GASKET DETAIL

The City of Grain Valley

DATE: 1/20/05
SCALE: NO SCALE

SAN–004

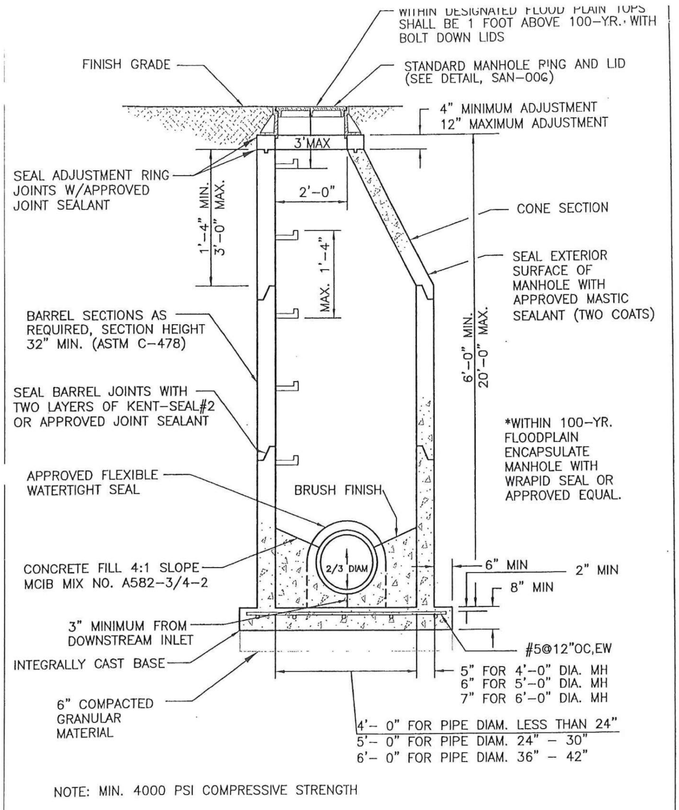

NOTE: MIN. 4000 PSI COMPRESSIVE STRENGTH

STANDARD PRECAST MANHOLE

The City of Grain Valley

DATE: 1/20/05

SAN–001

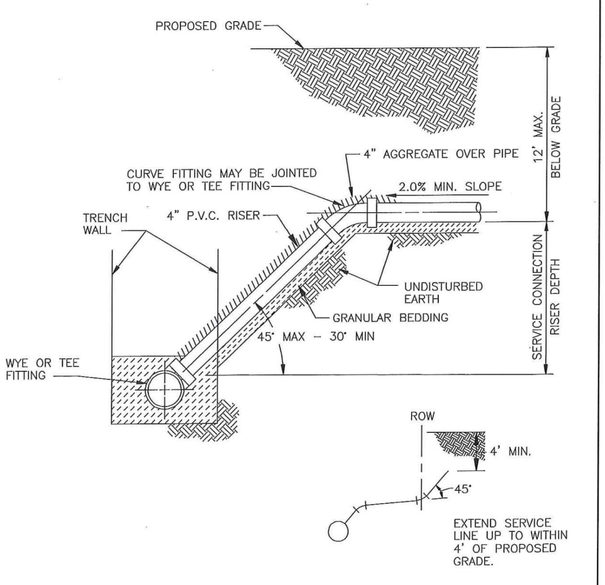

SEWER SERVICE CONNECTION DETAIL

GRAIN VALLEY
what a great place to grow

DATE: 1/31/03
SCALE: NO SCALE

SAN–007

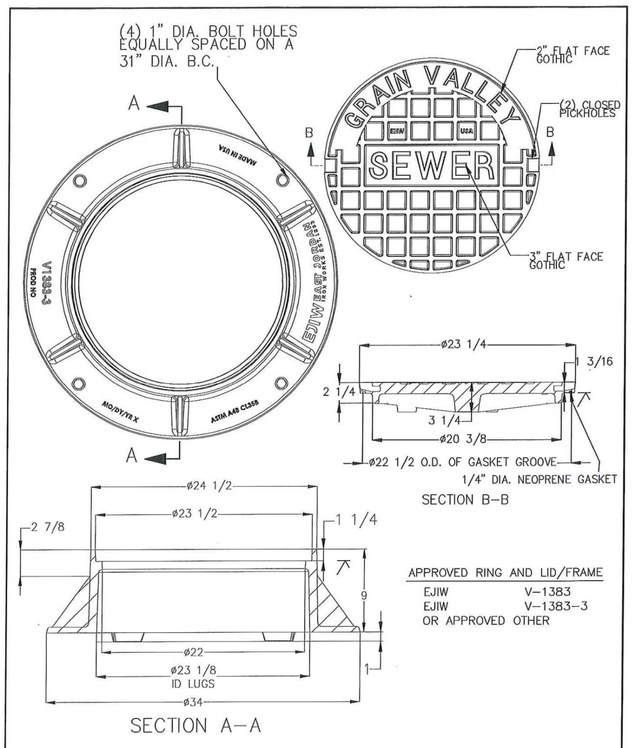

APPROVED RING AND LID/FRAME

EJIW	V–1383
EJIW	V–1383–3
OR APPROVED OTHER	

MANHOLE RING AND LID/FRAME DETAIL

DATE: 7/20/12
SCALE: NO SCALE

SAN–006

SANITARY SEWER DETAILS

THE LOFTS AT
OLD TOWNE MARKET PLACE

GRAIN VALLEY - JACKSON COUNTY - MISSOURI

Hg Consult Inc engineers planners

11010 Haskell St. Ste 210 Kansas City, KS 66109 816-759-2285 CORPORATE LICENSE No. E2010005873

4/30/20

R. KEVIN STERRETT, MO E-26440

DATE	REVISION	NO.	BY	CK/APP

IF THIS IS NOT A BLUE INK SEAL AND THE SIGNATURE IS NOT IN BLUE INK, THE PLAN IS A COPY AND MAY CONTAIN UNAUTHORIZED ALTERATIONS. THE CERTIFICATION CONTAINED ON THIS DOCUMENT SHALL NOT APPLY TO ANY COPIES

DATE April 30, 2020
JOB NO. 19.068

SHEET 14 OF 21

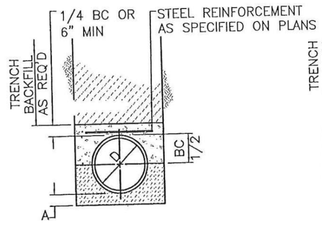

TYPICAL ARCH ENCASEMENT

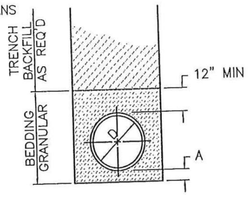

TYPICAL PIPE BEDDING

LEGEND	
BC	OUTSIDE DIA. OF PIPE
D	NOMINAL PIPE SIZE
A	EMBEDMENT BELOW PIPE
	TRENCH BACKFILL
	TAMPED GRANULAR BACKFILL (TYPE 3)
	GRANULAR BEDDING
	CONCRETE
	CLEAN CRUSHED STONE

TABLE OF EMBEDMENT DEPTHS BELOW PIPE		
D	A MIN SOIL	A MIN ROCK
0"–27"	4"	6"
30"–60"	6"	9"
66"–UP	8"	12"

PIPE EMBEDMENT NOTES

1. GRANULAR BEDDING SHALL BE CRUSHED ROCK OR PEA GRAVEL WITH NOT LESS THAN 95% PASSING 3/4" (95% PASSING 1" FOR 30" AND LARGER PIPE) AND NOT LESS THAN 95% RETAINED ON A 3/8"; TO BE PLACED IN NOT MORE THAN 6" LAYERS AND COMPACTED BY SLICING WITH A SHOVEL OR VIBRATING.
2. TAMPED GRANULAR BACKFILL (TYPE 3) SHALL BE GRANULAR MATERIAL CONFORMING TO THE REQUIREMENTS OF SECTION 1007.3 OF THE 1990 MISSOURI STANDARD SPECIFICATIONS FOR HIGHWAY CONSTRUCTION.
3. TRENCH BACKFILL (TYPE 1) SHALL BE FINELY DIVIDED MATERIAL FREE FROM DEBRIS AND STONES, COMPACTED TO 95% MAXIMUM DENSITY.
4. FLOWABLE FILL UNDER EXISTING PAVEMENT
   95% COMPACTION IN R/W OR
   90% COMPACTION OUTSIDE OF R/W

PIPE EMBEDMENT DETAILS

The City of Grain Valley

DATE: 1/20/05

SAN-010

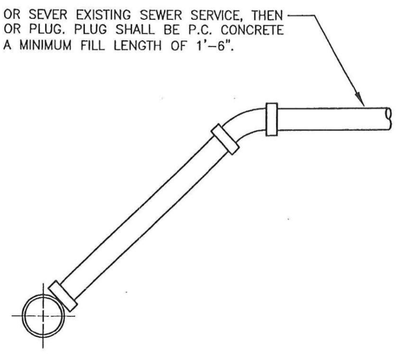

*IF EXISTING IS CLAY TILE MUST REMOVE TO MAIN AS APPROVED BY PUBLIC WORKS DIRECTOR.

SEWER SERVICE DEMOLITION DETAIL

The City of Grain Valley

DATE: 1/20/05
SCALE: NO SCALE

SAN-008

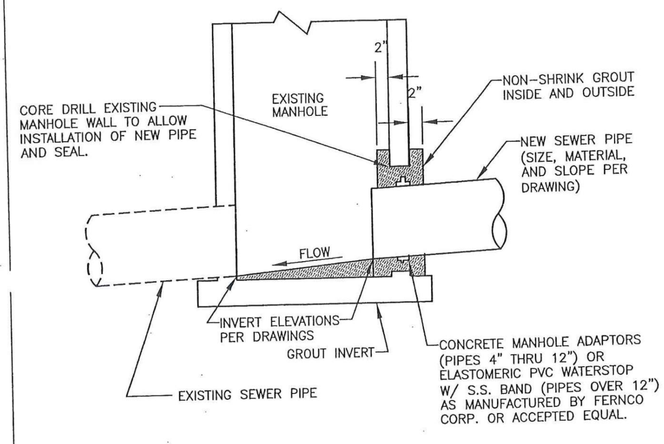

1. DRILL AND BOOT ACCEPTED OPTION
2. MANHOLE MUST BE VACUM TESTED

TYPICAL CONNECTION TO EXISTING MANHOLE

The City of Grain Valley

DATE: 1/20/05

SAN-012

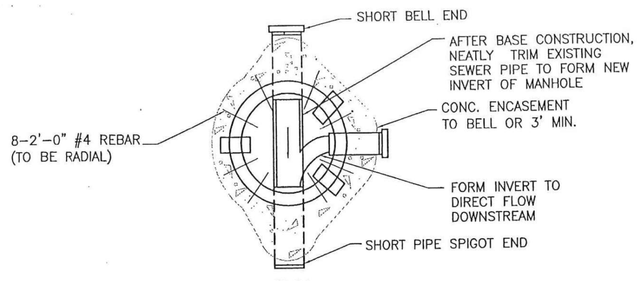

PLAN

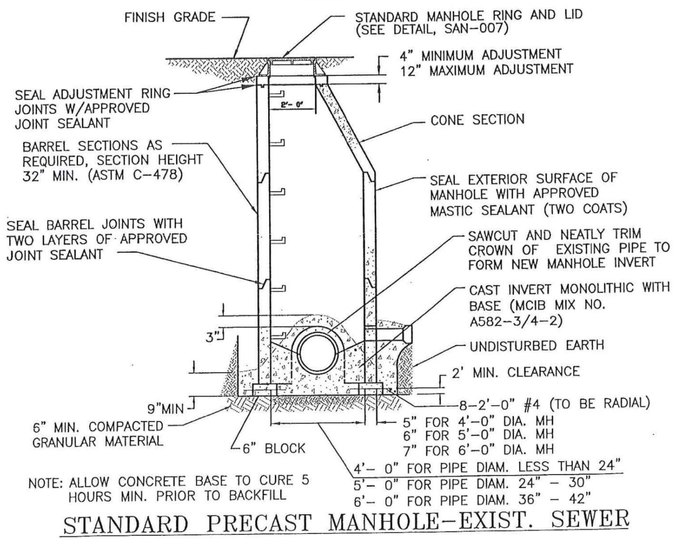

NOTE: ALLOW CONCRETE BASE TO CURE 5 HOURS MIN. PRIOR TO BACKFILL

STANDARD PRECAST MANHOLE–EXIST. SEWER

The City of Grain Valley

DATE: 1/20/05

SAN-011

15 SHEET OF 21

SANITARY SEWER DETAILS

THE LOFTS AT
OLD TOWNE MARKET PLACE
GRAIN VALLEY - JACKSON COUNTY - MISSOURI

DATE April 30, 2020
PROJECT NO. 19.068

Hg Consult Inc engineers planners
11010 Haskell St. Ste 210 Kansas City, KS 66109 816-759-2285 CORPORATE LICENSE No. E2010005873

STATE OF MISSOURI
R. KEVIN STERRETT
NUMBER E-26440
PROFESSIONAL ENGINEER
4/30/20
R. KEVIN STERRETT, MO E-26440

DATE	REVISION	NO.	BY	CK/APP

IF THIS IS NOT A BLUE INK SEAL AND THE SIGNATURE IS NOT IN BLUE INK, THE PLAN IS A COPY AND MAY CONTAIN UNAUTHORIZED ALTERATIONS. THE CERTIFICATION CONTAINED ON THIS DOCUMENT SHALL NOT APPLY TO ANY COPIES

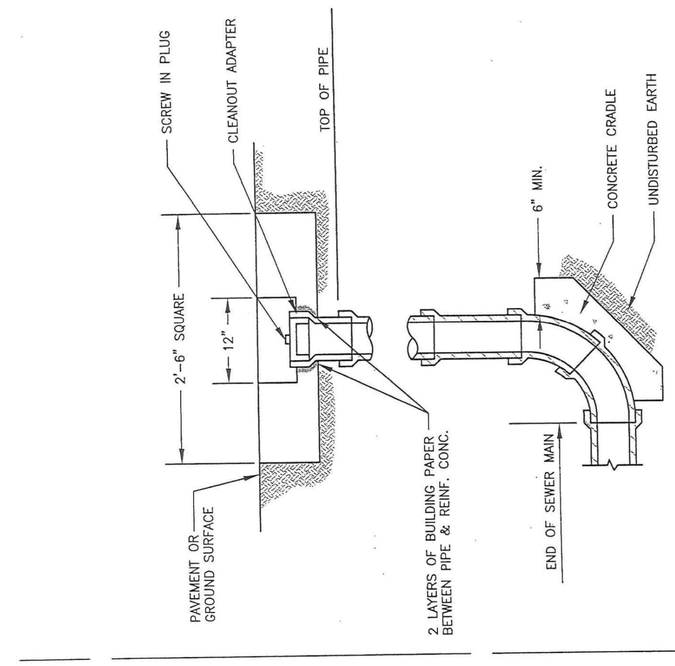

STANDARD CLEANOUT DETAIL (LAMP)

The City of Grain Valley

SAN-018

DATE: 1/20/05
SCALE: NO SCALE

SPECIFICATION TIME REQUIRED FOR A 1.0 PSIG PRESSURE DROP
FOR SIZE AND LENGTH OF PIPE INDICATED FOR Q=0.0015*

PIPE DIAMETER (IN)	MINIMUM TIME (MIN:SEC)	LENGTH FOR MINIMUM TIME (FT)	TIME FOR LONGER LENGTHS	SPECIFIED MINIMUM FOR LENGTH (L) SHOWN (MIN:SEC:MLSEC)						
				100 FT	150 FT	200 FT	250 FT	300 FT	350 FT	400 FT
4	3:46	597	.380L	3:46	3:46	3:46	3:46	3:46	3:46	3:46
6	5:40	398	.854L	5:40	5:40	5:40	5:40	5:40	5:40	5:42
8	7:34	298	1.520L	7:34	7:34	7:34	7:34	7:36	8:52	10:08
10	9:26	239	2.374L	9:26	9:26	9:26	9:53	11:52	13:51	15:49
12	11:20	199	3.418L	11:20	11:20	11:24	14:15	17:05	19:56	22:47
15	14:10	159	5.342L	14:10	14:10	17:48	22:15	26:42	31:09	35:36
18	17:00	133	7.692L	17:00	19:13	25:38	32:03	38:27	44:52	51:16
21	19:50	114	10.470L	19:50	26:10	34:54	43:37	52:21	61:00	69:48
24	22:40	99	13.674L	22:47	34:11	45:34	56:58	68:22	79:46	91:10
27	25:30	88	17.306L	28:51	43:16	57:41	72:07	86:32	100:57	115:22
30	28:20	80	21.366L	35:37	53:25	71:13	89:02	106:50	124:38	142:26
33	31:10	72	25.852L	43:05	64:38	86:10	107:43	129:16	150:43	172:21
36	34:00	66	30.768L	51:17	76:55	102:34	128:12	153:50	179:29	205:07
42	39:48	57	41.883L	69:48	104:42	139:37	174:30	209:24	244:19	279:13
48	45:34	50	54.705L	91:10	136:45	182:21	227:55	273:31	319:06	364:42
54	51:02	44	69.236L	115:24	173:05	230:47	288:29	346:11	403:53	461:34
60	56:40	40	85.476L	142:28	213:41	284:55	356:09	427:23	498:37	569:50

TESTING FOR PVC

The City of Grain Valley

SAN-019

DATE	REVISION	NO.	BY	CK/APP

IF THIS IS NOT A BLUE INK SEAL AND THE SIGNATURE IS NOT IN BLUE INK, THE PLAN IS A COPY AND MAY CONTAIN UNAUTHORIZED ALTERATIONS. THE CERTIFICATION CONTAINED ON THIS DOCUMENT SHALL NOT APPLY TO ANY COPIES

STATE OF MISSOURI
R. KEVIN STERRETT
NUMBER E-26440
PROFESSIONAL ENGINEER

4/30/20

R. KEVIN STERRETT, MO E-26440

Consult Inc
engineers
planners

11010 Haskell St. Ste 210 Kansas City, KS 66109 816-759-2285 CORPORATE LICENSE No. E2010005873

SANITARY SEWER DETAILS

THE LOFTS AT
OLD TOWNE MARKET PLACE
GRAIN VALLEY - JACKSON COUNTY - MISSOURI

DATE
April 30, 2020

JOB NO.
19.068

4/30/2020
UtilityDetails-Sanitary-03.dgn

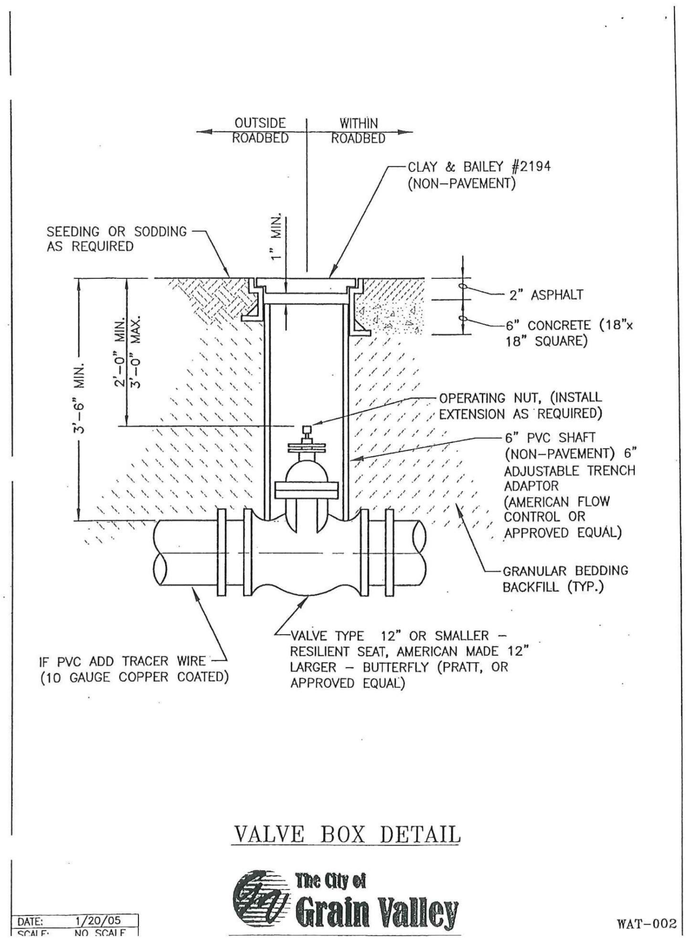

VALVE BOX DETAIL

The City of Grain Valley

DATE: 1/20/05
SCALE: NO SCALE

WAT-002

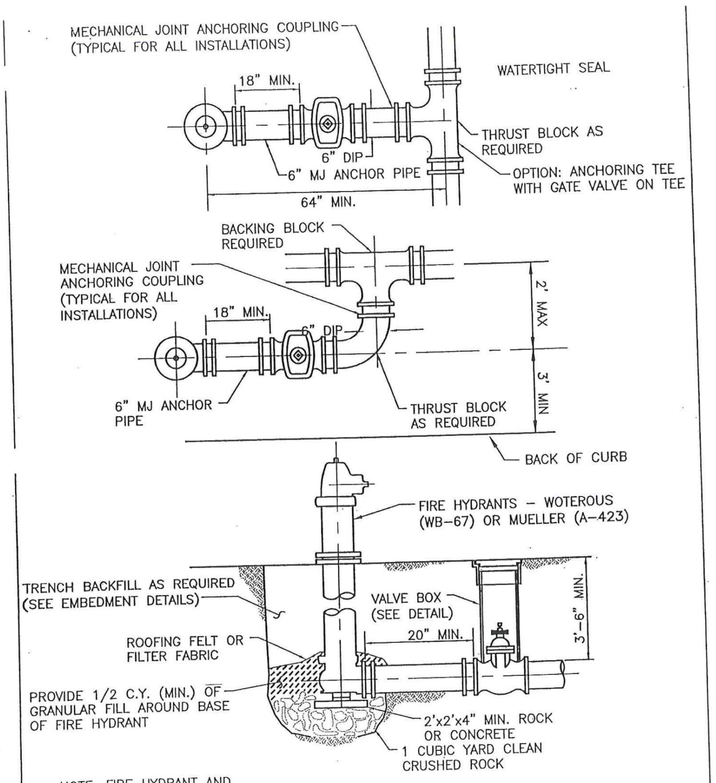

NOTE: FIRE HYDRANT AND VALVE ASSEMBLY SHALL BE CLEAR OF SIDEWALK PLACEMENT.

FIRE HYDRANT DETAIL

The City of Grain Valley

DATE: 1/20/05
SCALE: NO SCALE

WAT-001

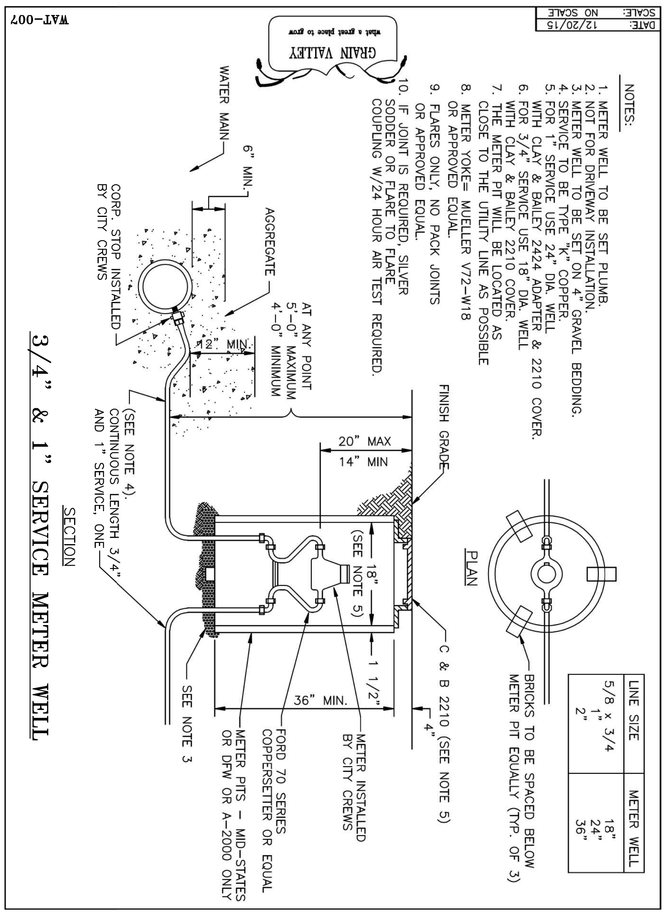

662 & 663 OR EQUAL

FLANGE SIZE	STANDARD A	B	C	D	SIZE ON SIZE C	D	NUMBER OF BOLTS
4"	15"	5"	5-1/16"	4-11/16"	NONE	NONE	8
6"	15"	5"	7-1/16"	6-11/16"	7-1/16"	6.00	8
8"	20"	5"	9-1/16"	8-11/16"	9-1/16"	8.00	10

* AVAILABLE IN 6" – 12" NOMINAL PIPE SIZES.

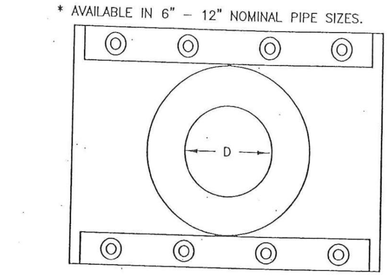

PLAN

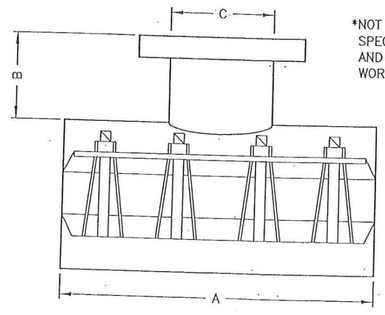

SECTION

*NOT ALLOWED UNLESS SPECIFICALLY IDENTIFIED AND APPROVED BY PUBLIC WORKS DIRECTOR

STAINLESS STEEL TAPPING SLEEVES

The City of Grain Valley

DATE: 1/20/05
SCALE: NO SCALE

WAT-00

WATER LINE DETAILS

THE LOFTS AT
OLD TOWNE MARKET PLACE

GRAIN VALLEY - JACKSON COUNTY - MISSOURI

Hg Consult Inc engineers planners

11010 Haskell St. Ste 210 Kansas City, KS 66109 816-759-2285 CORPORATE LICENSE No. E2010005873

4/30/20

R. KEVIN STERRETT, MO E-26440

DATE	REVISION	NO.	BY	CK/APP

IF THIS IS NOT A BLUE INK SEAL AND THE SIGNATURE IS NOT IN BLUE INK, THE PLAN IS A COPY AND MAY CONTAIN UNAUTHORIZED ALTERATIONS. THE CERTIFICATION CONTAINED ON THIS DOCUMENT SHALL NOT APPLY TO ANY COPIES

DATE April 30, 2020
PROJECT NO. 19.068

SHEET 17 OF 21

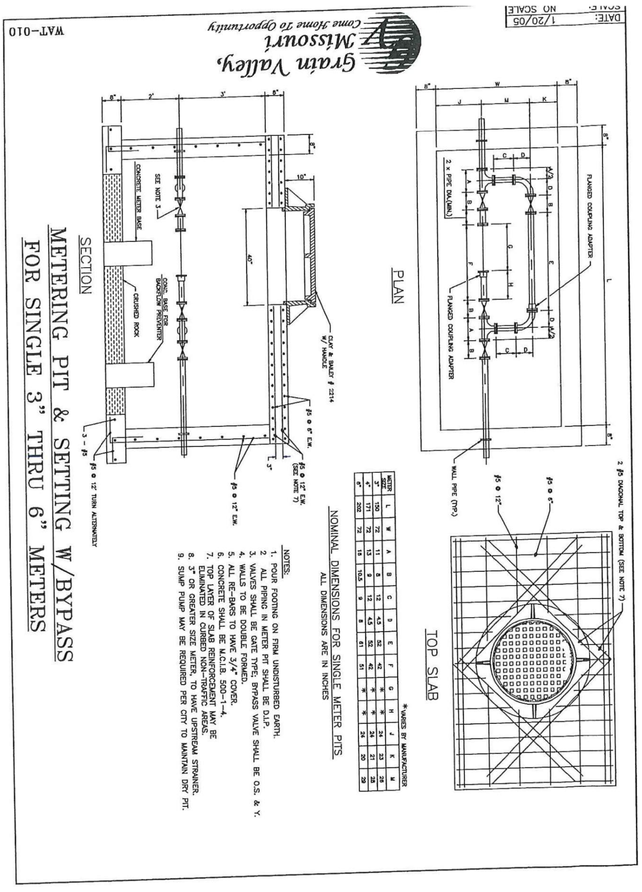

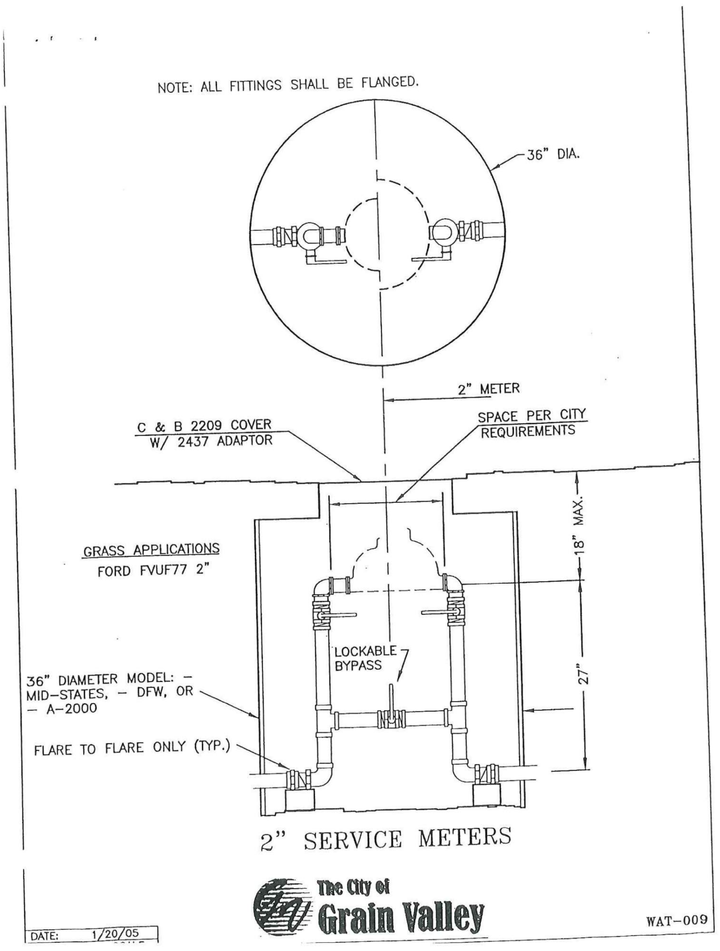

BENDS LESS THAN 45°	B	C	D	E	F	BENDS 45° THRU 90°	B	C	D	E	F
6"	8"	18"	12"	24"	12"	6"	8"	30"	12"	24"	30"
8"	8"	24"	12"	24"	18"	8"	8"	36"	12"	24"	36"
10"	8"	24"	12"	24"	18"	10"	8"	42"	12"	24"	42"
12"	8"	36"	18"	24"	24"	12"	12"	54"	18"	30"	48"
16"	12"	36"	18"	24"	30"	16"	18"	60"	18"	30"	48"
24"	18	42	30	30	36	24"	24"	72"	30"	36"	54"

TEES	G	H	I	J	TEES	G	H	I	J
6"x 6"x 6"	12"	24"	24"	18"	16"x 16"x 6"	12"	24"	24"	18"
8"x 8"x 6"	12"	24"	24"	18"	16"x 16"x 8"	12"	24"	24"	24"
8"x 8"x 8"	12"	24"	24"	24"	16"x 16"x 12"	12"	36"	24"	36"
10"x 10"x 6"	12"	24"	24"	18"	16"x 16"x 16"	18"	48"	30"	48"
10"x 10"x 8"	12"	24"	24"	24"	24"x 24"x 8"	12"	24"	24"	24"
10"x 10"x 10"	12"	24"	24"	30"	24"x 24"x 10"	12"	30"	24"	30"
12"x 12"x 6"	12"	24"	24"	18"	24"x 24"x 12"	18"	36"	24"	36"
12"x 12"x 8"	12"	24"	24"	24"	24"x 24"x 16"	18"	48"	30"	48"
12"x 12"x 12"	12"	36"	24"	36"	24"x 24"x 24"	24"	60"	36"	60"

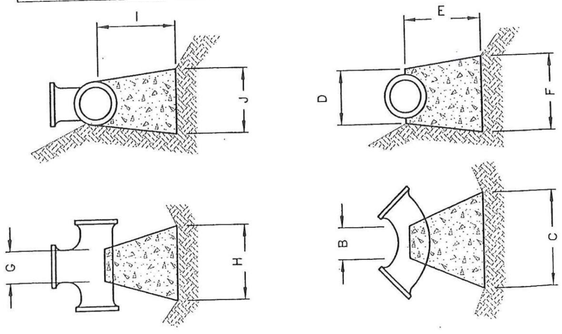

NOTE: ALL MECHANICAL FITTINGS SHALL BE ANCHORED TO PIPE.

THRUST BLOCK DETAIL

The City of Grain Valley

DATE: 1/20/05
SCALE: NO SCALE
WAT-012

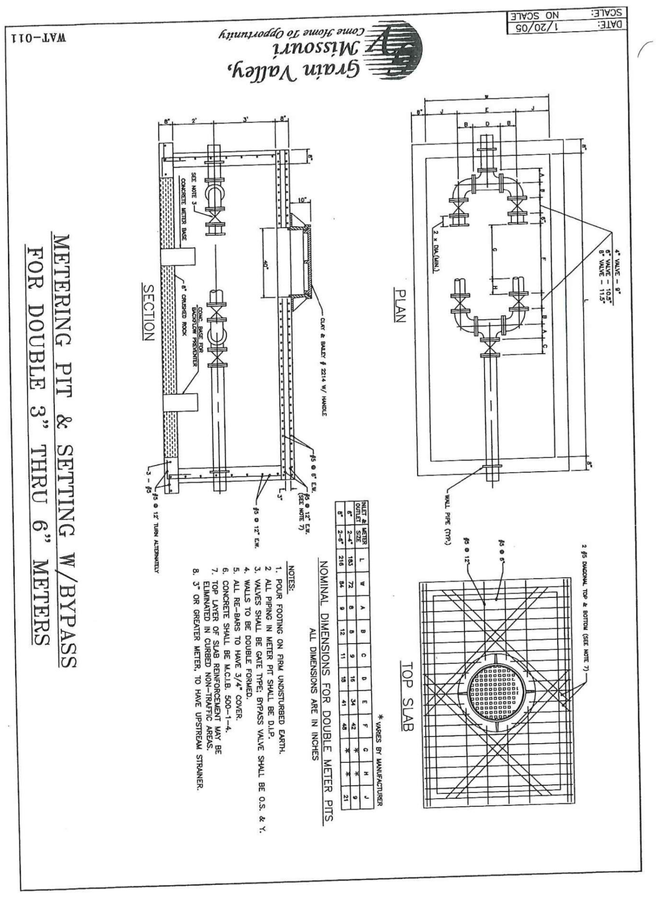

WATER LINE DETAILS

THE LOFTS AT
OLD TOWNE MARKET PLACE

GRAIN VALLEY - JACKSON COUNTY - MISSOURI

Hg Consult Inc engineers planners

11010 Haskell St. Ste 210 Kansas City, KS 66109 816-759-2285 CORPORATE LICENSE No. E2010005873

R. KEVIN STERRETT, MO E-26440

4/30/20

DATE	REVISION	NO.	BY	CK/APP

IF THIS IS NOT A BLUE INK SEAL AND THE SIGNATURE IS NOT IN BLUE INK, THE PLAN IS A COPY AND MAY CONTAIN UNAUTHORIZED ALTERATIONS. THE CERTIFICATION CONTAINED ON THIS DOCUMENT SHALL NOT APPLY TO ANY COPIES

DATE April 30, 2020
JOB NO. 19-068

SHEET 18 OF 21

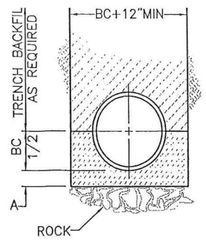

WATERLINE PIPE EMBEDMENT (IN ROCK)

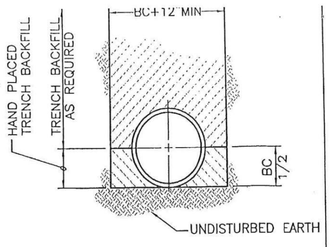

WATERLINE PIPE EMBEDMENT (IN SOIL)

LEGEND	
BC	OUTSIDE DIA. OF PIPE
D	NOMINAL PIPE SIZE
A	EMBEDMENT BELOW PIPE
	TRENCH BACKFILL
	TAMPED GRANULAR BACKFILL (TYPE 3)
	GRANULAR BEDDING
	CONCRETE
	CLEAN CRUSHED STONE

TABLE OF EMBEDMENT DEPTHS BELOW PIPE		
D	A MIN SOIL	A MIN ROCK
0"–27"	0"	6"
30"–60"	0"	9"
66"–UP	0"	12"

TRENCH EMBEDMENT NOTES:

1. GRANULAR BEDDING SHALL BE CRUSHED ROCK OR PEA GRAVEL WITH NOT LESS THAN 95% PASSING 3/4" (95% PASSING 1" FOR 30" AND LARGER PIPE) AND NOT LESS THAN 95% RETAINED ON A 3/8"; TO BE PLACED IN NOT MORE THAN 6" LAYERS AND COMPACTED BY SLICING WITH A SHOVEL OR VIBRATING.
2. TAMPED GRANULAR BACKFILL (TYPE 3) SHALL BE GRANULAR MATERIAL CONFORMING TO THE REQUIREMENTS OF SECTION 1007.3 OF THE 1990 MISSOURI STANDARD SPECIFICATIONS FOR HIGHWAY CONSTRUCTION.
3. TRENCH BACKFILL (TYPE 1) SHALL BE FINELY DIVIDED MATERIAL FREE FROM DEBRIS AND STONES, COMPACTED TO 95% MAXIMUM DENSITY.

WATERLINE PIPE EMBEDMENT DETAILS

The City of Grain Valley

DATE: 1/20/05
SCALE: NO SCALE

WAT-014

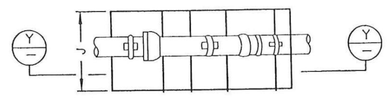

PLAN

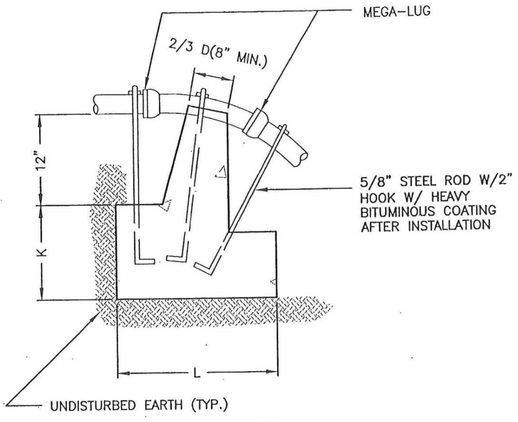

SECTION Y–Y

PIPE SIZE	J	K	L
6" & SMALLER	2'–6"	2'–6"	3'–0"
8"	3–0"	2'–9"	4'–0"

VERTICAL BEND THRUST BLOCK DETAIL

The City of Grain Valley

DATE: 1/20/05
SCALE: NO SCALE

WAT-013

ALLOWABLE LEAKAGE FOR WATERLINES

ALLOWABLE LEAKAGE PER 1,000 FEET OF PIPELINE* – gph

AVERAGE TEST PRESSURE (psi)	NOMINAL PIPE DIAMETER (INCHES) 4	6	8	10	12	14	16	18	20	24
300	0.52	0.78	1.04	1.30	1.56	1.82	2.08	2.34	2.60	3.12
275	0.50	0.75	1.00	1.24	1.49	1.74	1.99	2.24	2.49	2.99
250	0.47	0.71	.095	1.19	1.42	1.66	1.90	2.14	2.37	2.85
225	0.45	0.68	0.90	1.13	1.35	1.58	1.80	2.03	2.25	2.70
200	0.43	0.64	0.85	1.06	1.28	1.48	1.70	1.91	2.12	2.55
175	0.40	0.59	0.80	0.99	1.19	1.39	1.59	1.79	1.98	2.38
150	0.37	0.55	0.74	0.92	1.10	1.29	1.47	1.66	1.84	2.21
125	0.34	0.50	0.67	0.84	1.01	1.18	1.34	1.51	1.68	2.01
100	0.30	0.45	0.60	0.75	0.90	1.05	1.20	1.35	1.50	1.80

* FOR PIPE WITH 18–FOOT NOMINAL LENGTHS. TO OBTAIN THE RECOMMENDED ALLOWABLE LEAKAGE FOR PIPE WITH 20–FOOT LENGTHS, MULTIPLY THE LEAKAGE CALCULATED FROM THE TABLE BY 0.9. IF THE PIPELINE UNDER TEST CONTAINS SECTIONS OF VARIOUS DIAMETERS, THE ALLOWABLE LEAKAGE WILL BE THE SUM OF THE COMPUTED LEAKAGE FOR EACH SIZE.

The City of Grain Valley

DATE: 1/20/05

WAT-017

CORPORATION TAPS

NOTE: A CORPORATION TAP SHALL NOT BE CLOSER THAN 18" TO A BELL FITTING OR ANOTHER TAP.

TAPPING VALVES

NOTE: TAPS SHALL NOT BE LESS THAN 3' FROM SPIGOT END & 18" FROM BELL OF PIPE.

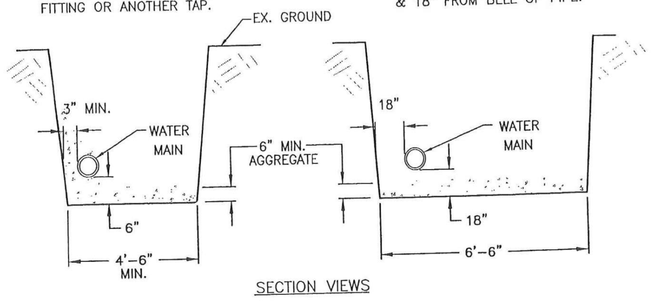

SECTION VIEWS

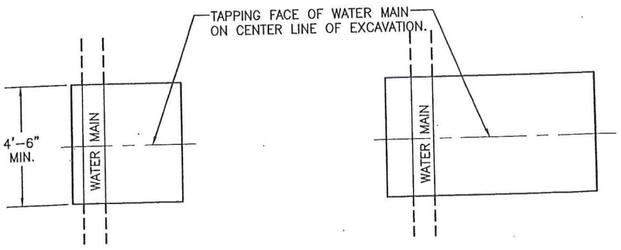

NOTES:

1. EXCAVATIONS EXCEEDING 5' IN DEPTH MUST BE SHORED, BY CONTRACTOR.
2. ALL MATERIAL FOR SERVICE MUST BE INSTALLED PRIOR TO TAP BEING MADE.

PLAN VIEWS

EXCAVATION DETAILS

The City of Grain Valley

DATE: 1/20/05
SCALE: NO SCALE

WAT-015

WATER LINE DETAILS

THE LOFTS AT
OLD TOWNE MARKET PLACE

GRAIN VALLEY - JACKSON COUNTY - MISSOURI

DATE April 30, 2020
PROJECT 19.068

SHEET 19 OF 21

Hg Consult Inc engineers planners

11010 Haskell St. Ste 210 Kansas City, KS 66109 816-759-2285 CORPORATE LICENSE No. E2010005873

STATE OF MISSOURI R. KEVIN STERRETT NUMBER E-26440 MISSOURI PROFESSIONAL ENGINEER

4/30/20

R. KEVIN STERRETT, MO E-26440

DATE	REVISION	NO.	BY	CK/APP

IF THIS IS NOT A BLUE INK SEAL AND THE SIGNATURE IS NOT IN BLUE INK, THE PLAN IS A COPY AND MAY CONTAIN UNAUTHORIZED ALTERATIONS. THE CERTIFICATION CONTAINED ON THIS DOCUMENT SHALL NOT APPLY TO ANY COPIES

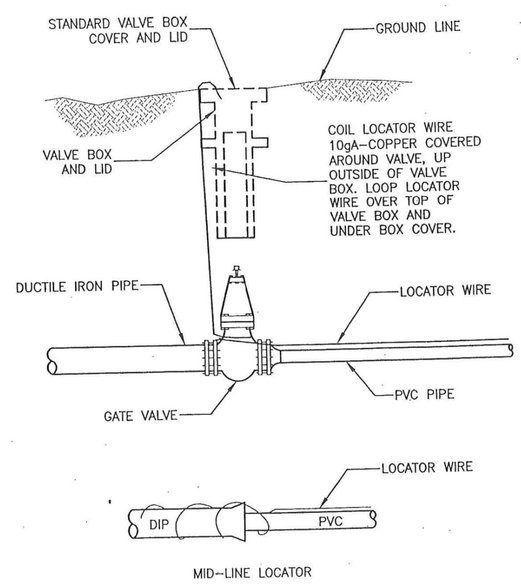

MID-LINE LOCATOR

LOCATOR WIRE DETAIL

The City of Grain Valley

WAT-018

WATER LINE DETAILS

THE LOFTS AT
OLD TOWNE MARKET PLACE

GRAIN VALLEY - JACKSON COUNTY - MISSOURI

DATE April 30, 2020
PROJECT NO. 19.068

SHEET 20 OF 21

Hg Consult Inc engineers planners

11010 Haskell St. Ste 210 Kansas City, KS 66109 816-759-2285 CORPORATE LICENSE No. E2010005873

4/30/20

R. KEVIN STERRETT, MO E-26440

DATE	REVISION	NO.	BY	CK/APP

IF THIS IS NOT A BLUE INK SEAL AND THE SIGNATURE IS NOT IN BLUE INK, THE PLAN IS A COPY AND MAY CONTAIN UNAUTHORIZED ALTERATIONS. THE CERTIFICATION CONTAINED ON THIS DOCUMENT SHALL NOT APPLY TO ANY COPIES

PARKING STALL SUMMARY

3 Bedroom 4-plex Stall Counts (South of Development)
Stalls Required = 96
Stalls Provided = 169
Stalls Remaining After Northern Stalls are Shared to New Development = 107

Estimated Stall Count Required
Existing two buildings to remain = 219
Proposed Development based on dwelling unit total = 318

Grand Total Required = 537

Estimated Stall Count Provided
Existing stalls for Old Towne Market = 351
New stalls from development = 102
New stalls striped on existing development = 25
Existing stalls from Northern half of duplexes = 62

Grand Total Provided = 540

SCALE IN FEET: 50 0 50

DATE	REVISION	NO.	BY	CK/APP

IF THIS IS NOT A BLUE INK SEAL AND THE SIGNATURE IS NOT IN BLUE INK, THE PLAN IS A COPY AND MAY CONTAIN UNAUTHORIZED ALTERATIONS. THE CERTIFICATION CONTAINED ON THIS DOCUMENT SHALL NOT APPLY TO ANY COPIES

STATE OF MISSOURI
R. KEVIN STERRETT
NO. E-26440
PROFESSIONAL ENGINEER

4/30/20

R. KEVIN STERRETT, NO E-26440

Consult Inc engineers planners
11010 Haskell St. Ste 210 Kansas City, KS 66109 816-759-2285 CORPORATE LICENSE No. E2010005873

PARKING STALL ANALYSIS

THE LOFTS AT OLD TOWNE MARKET PLACE
GRAIN VALLEY - JACKSON COUNTY - MISSOURI

DATE: April 30, 2020
JOB NO.: 19.068

4/30/2020
ParkingStallAnalysis.dgn

INTENTIONALLY LEFT BLANK

4 Front Elevation
scale: 1/8"=1'-0"

3 Left Side Elevation
scale: 1/8"=1'-0"

2 Right Side Elevation
scale: 1/8"=1'-0"

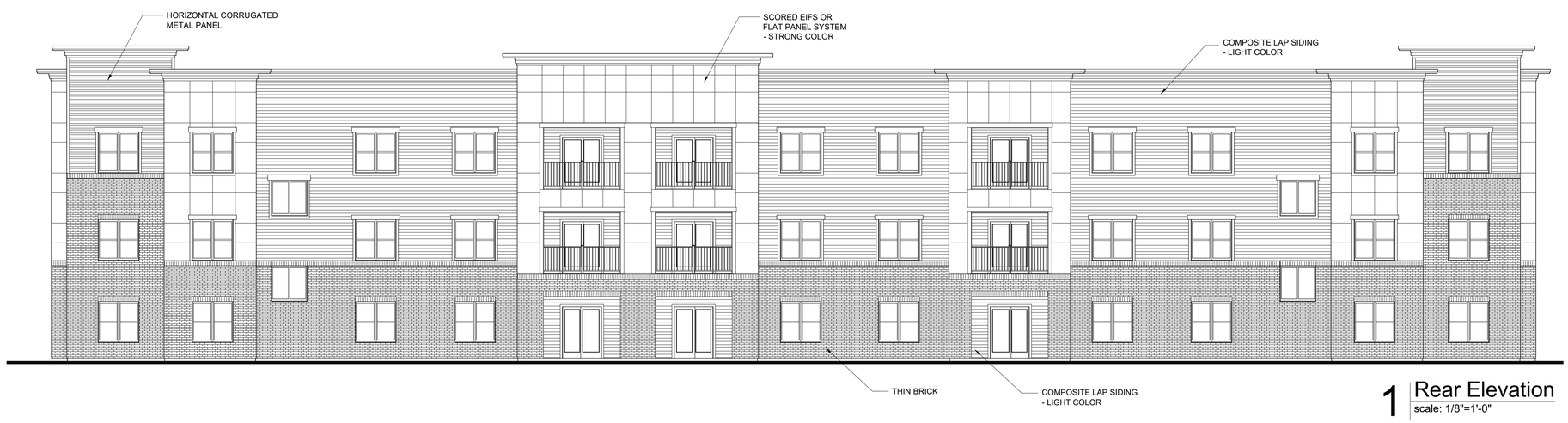

1 Rear Elevation
scale: 1/8"=1'-0"

BUILDINGS 1-2-3

WARD DEVELOPMENT

THE LOFTS AT OLD TOWNE

AT

ROUTE AA & N. GARDEN ST. GRAIN VALLEY, MISSOURI

DATE: 4/17/2020

REVISIONS:
1
2
3
4
5

NOT FOR CONSTRUCTION

FOR APPROVAL ONLY

SHEET NO.
A201

© 2020

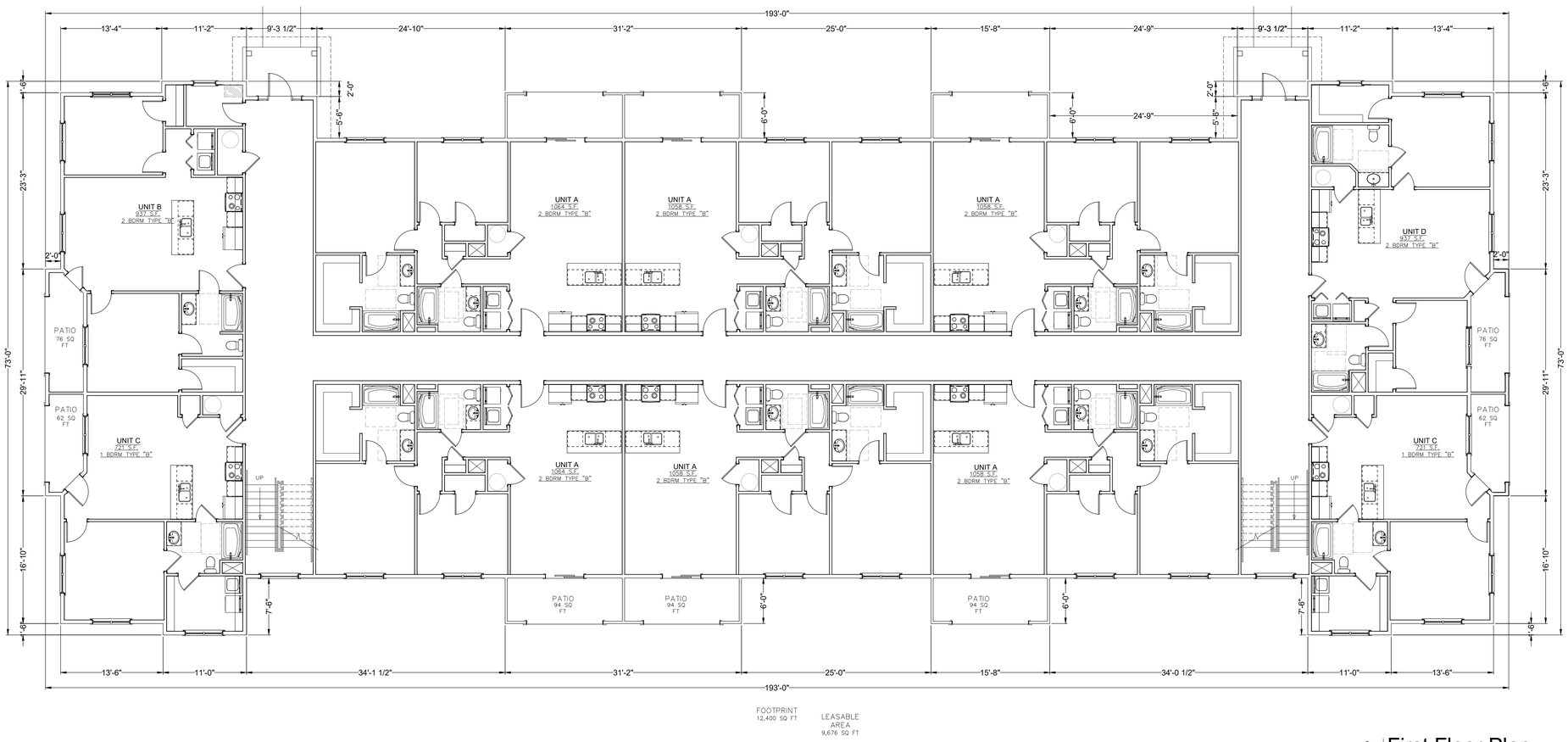

1 First Floor Plan
scale: 1/8"=1'-0"

TOTAL LIVING UNITS - 90 units:

BUILDING 1:

1st Floor	2 - 1 Bedroom Units 8 - 2 Bedroom Units
2nd Floor	2 - 1 Bedroom Units 6 - 2 Bedroom Units 2 - 3 Bedroom Units
3rd Floor	2 - 1 Bedroom Units 6 - 2 Bedroom Units 2 - 3 Bedroom Units

BUILDING 2:

1st Floor	2 - 1 Bedroom Units 6 - 2 Bedroom Units 2 - 3 Bedroom Units
2nd Floor	2 - 1 Bedroom Units 6 - 2 Bedroom Units 2 - 3 Bedroom Units
3rd Floor	2 - 1 Bedroom Units 6 - 2 Bedroom Units 2 - 3 Bedroom Units

BUILDING 3:

1st Floor	2 - 1 Bedroom Units 6 - 2 Bedroom Units 2 - 3 Bedroom Units
2nd Floor	2 - 1 Bedroom Units 6 - 2 Bedroom Units 2 - 3 Bedroom Units
3rd Floor	2 - 1 Bedroom Units 6 - 2 Bedroom Units 2 - 3 Bedroom Units

BUILDINGS 1-2-3

WARD DEVELOPEMENT

THE LOFTS AT OLD TOWNE

AT

ROUTE AA & N. GARDEN ST. GRAIN VALLEY, MISSOURI

DATE: 4/17/2020

REVISIONS:
1
2
3
4
5

SBC
ARCHITECTURAL SERVICES
Robert J. Shirk Jr. - Principal / Project Mgr.

3009 ELMIRA CT.
INDEPENDENCE,
MISSOURI 64057
(816) 797-7115

NOT FOR CONSTRUCTION

FOR APPROVAL ONLY

SHEET NO.
A101

© 2020

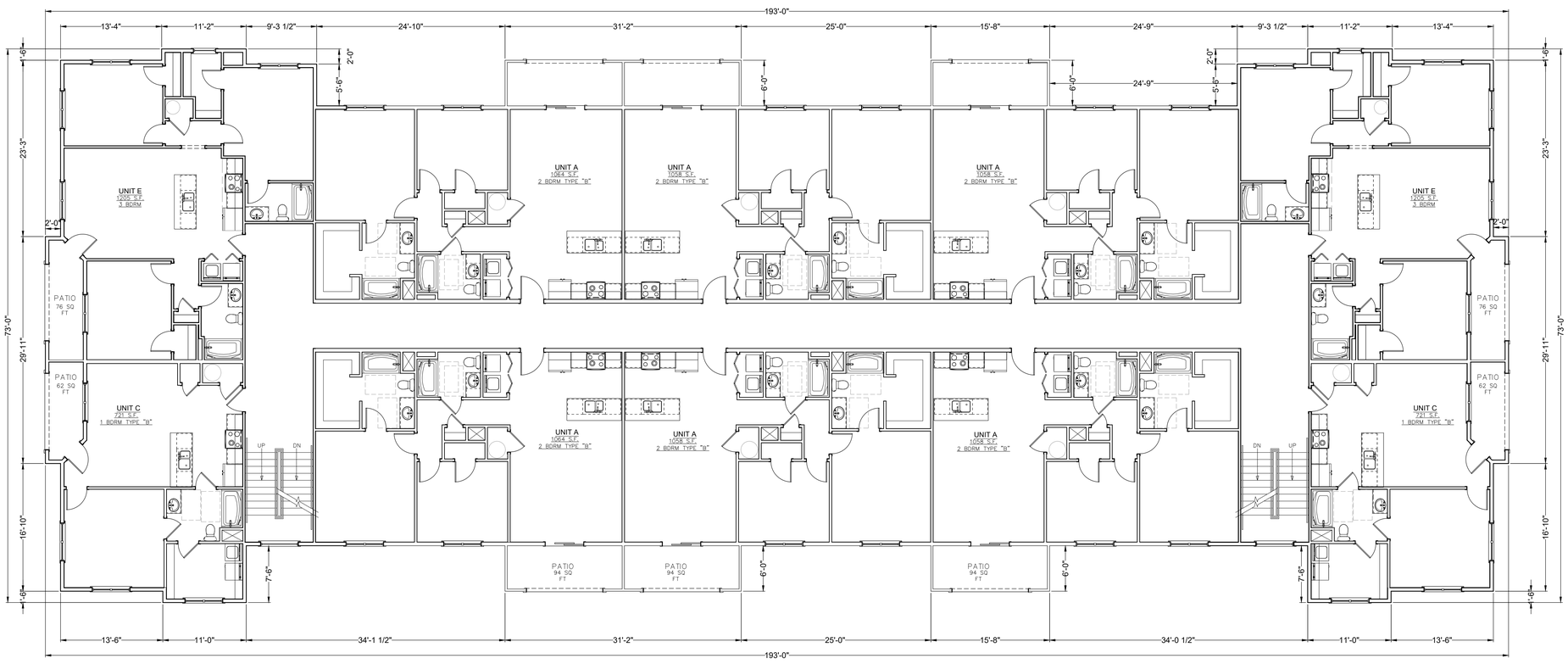

1 Second Floor Plan
scale: 1/8"=1'-0"

BUILDINGS 1-2-3

WARD DEVELOPEMENT

THE LOFTS AT OLD TOWNE

AT

ROUTE AA & N. GARDEN ST. GRAIN VALLEY, MISSOURI

DATE: 4/17/2020

REVISIONS:
1
2
3
4
5

SBC
ARCHITECTURAL SERVICES
Robert J. Shirk Jr. - Principal / Project Mgr.

3009 ELMIRA CT.
INDEPENDENCE,
MISSOURI 64057
(816) 797-7115

NOT FOR CONSTRUCTION

FOR APPROVAL ONLY

SHEET NO.
A102

© 2020

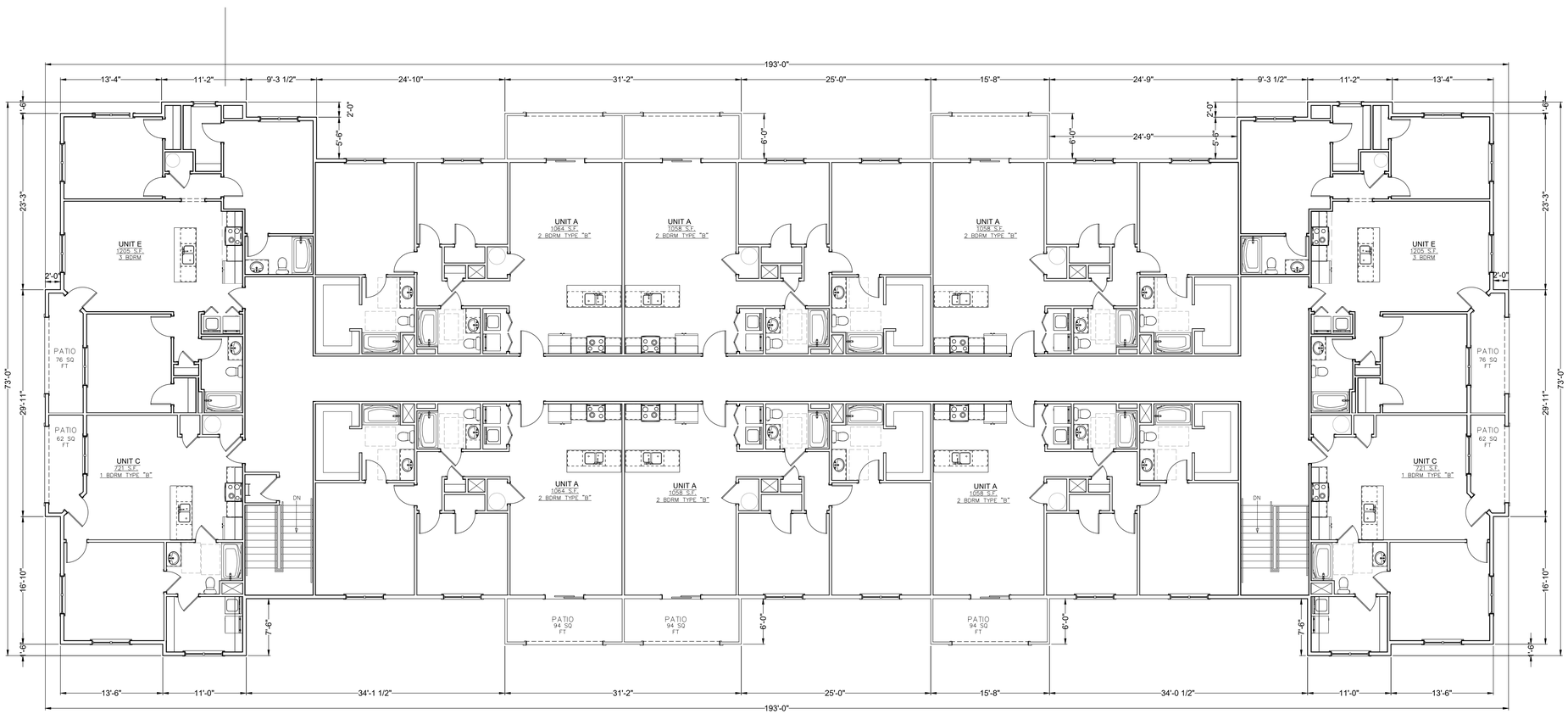

GROSS AREA 12,400 SQ FT

LEASABLE AREA 10,212 SQ FT

1 Third Floor Plan

scale: 1/8"=1'-0"

BUILDINGS 1-2-3

WARD DEVELOPEMENT

THE LOFTS AT OLD TOWNE

AT

ROUTE AA & N. GARDEN ST. GRAIN VALLEY, MISSOURI

DATE: 4/17/2020

REVISIONS:

1
2
3
4
5

SBC

ARCHITECTURAL SERVICES

Robert J. Shirk Jr. - Principal / Project Mgr.

3009 ELMIRA CT.
INDEPENDENCE,
MISSOURI 64057
(816) 797-7115

NOT FOR CONSTRUCTION

FOR APPROVAL ONLY

SHEET NO.

A103

© 2020

AMENITY CENTER - FLOOR PLAN

SCALE 1/8"=1'-0"

NORTH

Design Studio

REVISION TABLE

NUMBER	DATE	REVISED BY	DESCRIPTION

THE LOFTS AT OLD TOWNE

BUILDING A

1ST - AMENITY LEVEL

HIGHPOINT DESIGN STUDIO

WWW.HIGHPOINTDESIGNSTUDIO.COM

DATE:

5/1/2020

SCALE:

1/8" = 1'

SHEET:

A-1

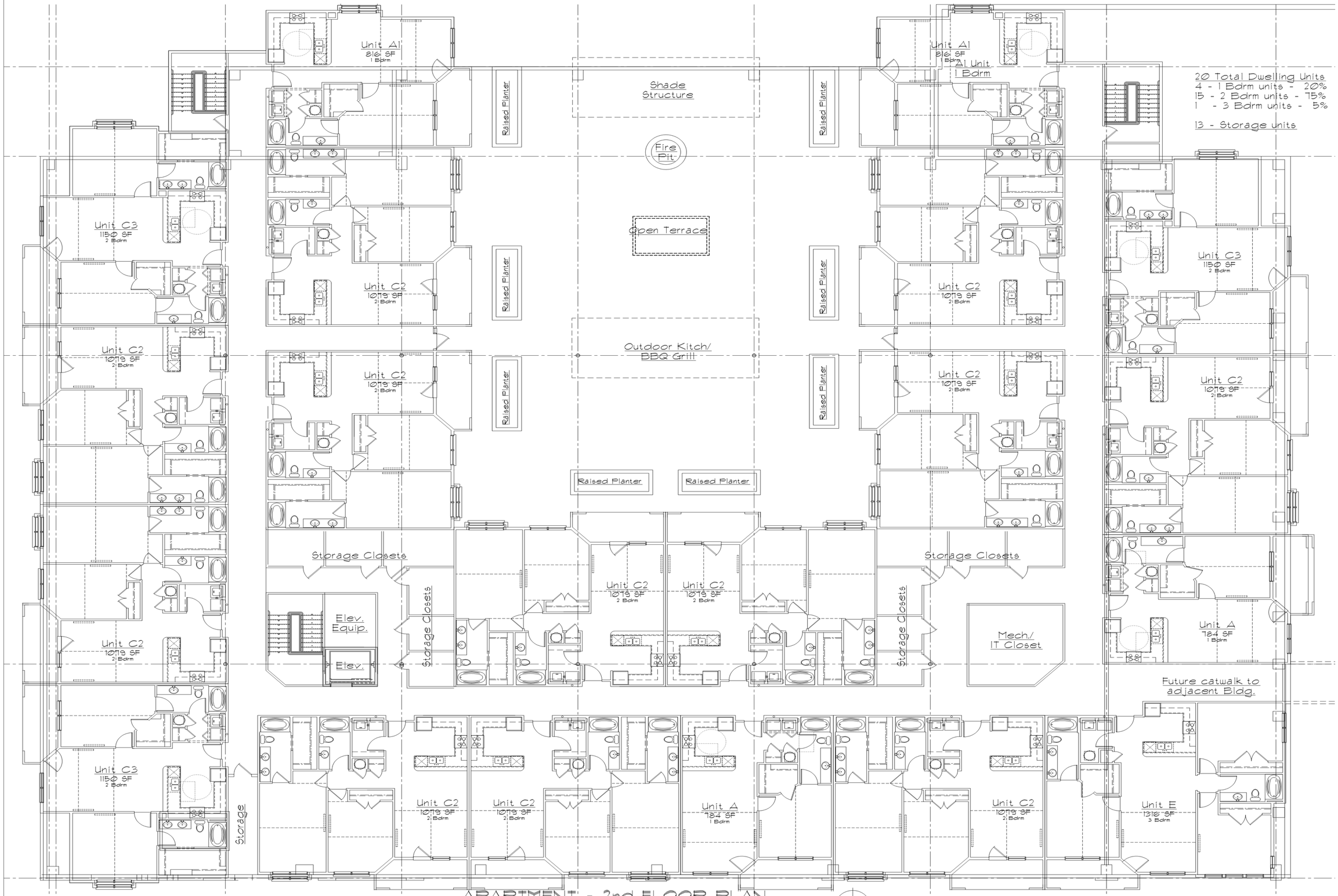

APARTMENT - 2nd FLOOR PLAN

SCALE 1/8" = 1'-0"

Design Studio

REVISION TABLE			
NUMBER	DATE	REVISED BY	DESCRIPTION

THE LOFTS AT OLD TOWNE

BUILDING A

2nd FLOOR PLAN

HIGHPOINT DESIGN STUDIO

WWW.HIGHPOINTDESIGNSTUDIO.COM

DATE:	5/1/2020
SCALE:	1/8" = 1'
SHEET:	A-2

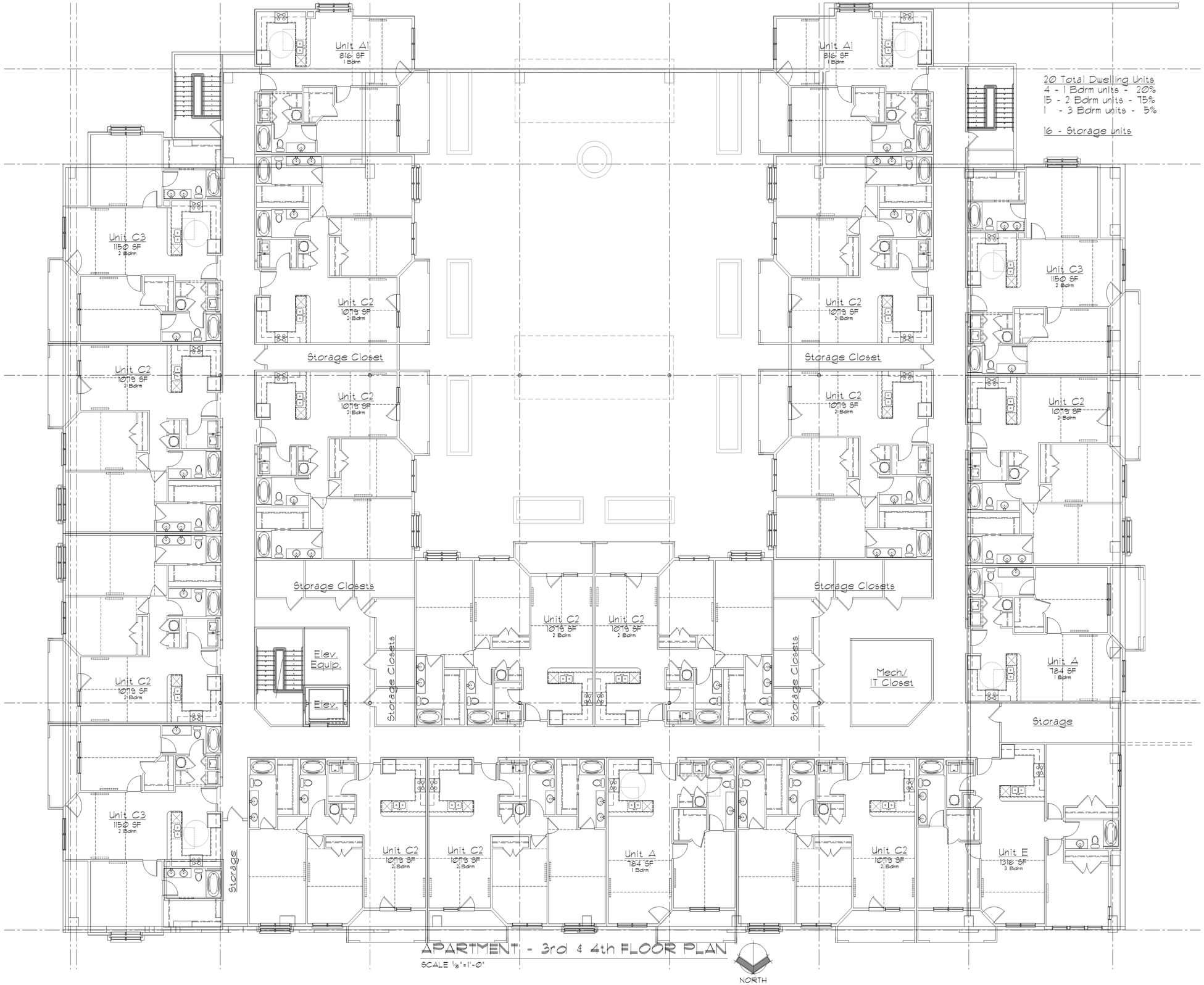

APARTMENT - 3rd & 4th FLOOR PLAN

SCALE 1/8"=1'-0"

Design Studio

REVISION TABLE			
NUMBER	DATE	REVISED BY	DESCRIPTION

THE LOFTS AT OLD TOWNE

BUILDING A

3RD / 4TH FLOOR PLAN

HIGHPOINT DESIGN STUDIO

WWW.HIGHPOINTDESIGNSTUDIO.COM

DATE:	5/1/2020
SCALE:	1/8" = 1'
SHEET:	A-3

Exterior Elevation Front

Exterior Elevation Back

HPD Design Studio

REVISION TABLE

NUMBER	DATE	REVISED BY	DESCRIPTION

THE LOFTS AT OLD TOWNE
BUILDING A

BUILDING 4 ELEVATIONS

HIGHPOINT DESIGN STUDIO
WWW.HIGHPOINTDESIGNSTUDIO.COM

DATE: 5/1/2020

SCALE: 1/8" = 1'

SHEET: E-1

Exterior Elevation Right

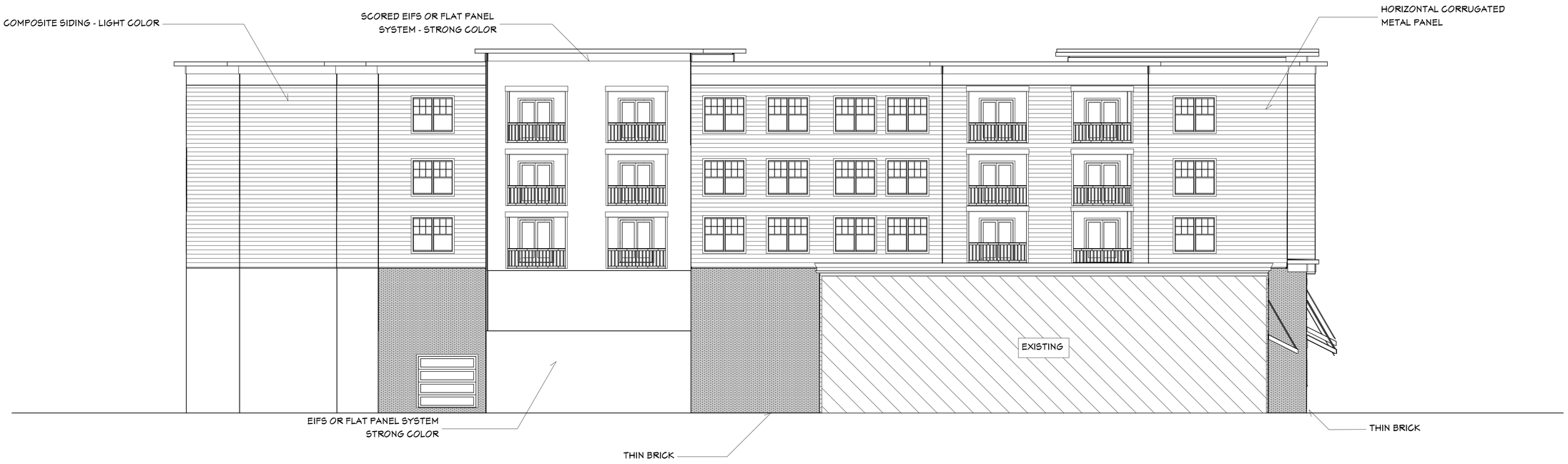

Exterior Elevation Left

Design Studio

REVISION TABLE

NUMBER	DATE	REVISED BY	DESCRIPTION

THE LOFTS AT OLD TOWNE

BUILDING A

BUILDING 4 ELEVATIONS

HIGHPOINT DESIGN STUDIO

WWW.HIGHPOINTDESIGNSTUDIO.COM

DATE: 5/1/2020

SCALE: 1/8" = 1'

SHEET: E-2

INTENTIONALLY LEFT BLANK

Grain Valley
Come Home To Opportunity

711 Main Street
Grain Valley, MO 64029
816.847.6220
816.847.6206 fax
www.cityofgrainvalley.org

PLANNING & ZONING APPLICATION

PROJECT INFORMATION

Location: The Lofts at Old Towne Market Place

Subdivision: Old Towne Marketplace 12th Plat **Lot #:** 1 **Zoning District:** R-3P

Description of Request: FDP + Final Plat of the Lofts at Old Towne Market Place

APPLICANT INFORMATION

Name: Bryan Rahn

Company: Ward Development

Address: 1120 NW Eagle Ridge Blvd. Grain Valley, MO 64029

Telephone: 816-985-2641 **Fax:** **E-mail:** bryanrahn@gmail.com

Property Owner: Old Towne Market Place LLC (David Ward)

Additional Contact(s):

Type of Application: Check Type & Submit Corresponding Requirements		Submittal Requirement List:	
	Rezoning 1 ▪ 2 ▪ 5 ▪ 10 ▪ 11 ▪ 14	1	Legal description of subject property
	Ordinance Amendment 10	2	Map depicting general location of site
	Special/Conditional Use Permit 1 ▪ 2 ▪ 10 ▪ 11 ▪ 14	3	Summary Site Analysis depicting current character of site
	Temporary Use Permit 2 ▪ 10 ▪ 14	4	Preliminary Plat (3 full size copies)
	Preliminary Plat 1 ▪ 3 ▪ 4 ▪ 14	5	Preliminary Development/ Site Plan (6 copies)
X	Final Plat/ Lot Split 1 ▪ 6 ▪ 12 ▪ 13 ▪ 14 ▪ 15	6	Final Plat (6 copies)
	Preliminary Development/Site Plan 1 ▪ 3 ▪ 5 ▪ 8 ▪ 9 ▪ 14	7	Final Development/ Site Plan (6 copies)
X	Final Development/Site plan 1 ▪ 7 ▪ 8 ▪ 9 ▪ 14 ▪ 15	8	Landscaping Plan (6 copies)
	Site Plan 1 ▪ 7 ▪ 8 ▪ 9 ▪ 12▪ 14 ▪ 15	9	Building Elevations (6 copies)
	Vacation of Right-of-way or Easement 1 ▪ 14 ▪ 16 ▪ 17	10	Written description of the proposal
	Future Land Use Map (Refer to page 9)	11	List of property owners within 185 feet
Note: Include at least one 8 ½ x 11 copy of all drawings and plans will all applications.		12	Construction plans for all public works improvements (6 copies)
		13	Copies of tax certificates from City and County
		14	Proof of ownership or control of property (deed, contract, lease) or permission from property owner
		15	Off-site easements if necessary
		16	Survey of vacation area
		17	Utility Comment Form - City will provide form

[Note: Applications must be completed in their entirety and all submittal requirements must be submitted at the time the application is submitted. Additional submittals may be requested as provided for in the Grain Valley City Code.]

The applicant hereby agrees that all information is provided as required with this application and the City Code:

Applicant's Signature **Date** 6/20/20

Applicant's Signature **Date**

INTENTIONALLY LEFT BLANK

BOA Staff Report – The Lofts at Old Towne Marketplace
Final Development Plan and Final Plat
May 27, 2020

ACTION:
Requesting approval of the Final Development Plan and Final Plat for the Lofts at Old Towne Market Place.

BACKGROUND:
The Board of Aldermen approved Ordinance 2496 on March 23, 2020 that changed the zoning on approximately 1.2 acres from Downtown Transition Zone to R-3p (Multi-Family Residential District – Planned Overlay District) and approximately 1.9 acres from C-1 (Central Business District) to R-3p (Multi-Family Residential District – Planned Overlay District). The Board also approved the preliminary development plan.

This site is generally located at Garden Street and near SW Eagles Parkway, aka 201 SW Eagles Parkway.

PURPOSE:
The proposed Lofts at Old Towne will consist of 154 rental units and a mixed-use indoor amenity center. The development includes demolition of the building that previously contained the former Patricia's Foods and Hardware store. A new four-story building (Building A) includes the first-floor mixed use amenity level and 64-rental units in three additional floors.

There will be three mostly identical three-story apartment buildings (Buildings B, C, and D) containing a total of 90 units on the vacant tract to the west.

The proposed 154 rental units will consist of 10% one-bedroom units, 80% two-bedroom units and 10% three-bedroom units.

The development will be completed in 2 phases. Buildings B, C and D as well as new parking lot will be completed in phase 1. Phase 2 will consist of the demolition and then construction of Building A.

The mixed-use amenity center will consist of an indoor pool, pickle ball courts, exercise room, media/theatre room, tenant co-op workspace and w-fi café, leasing office and tenant storage units.

ANALYSIS:
The final development plan is like the approved preliminary development plan and complies with the requirements of the City's land use regulations.

Page 2 – The Lofts at Old Towne Marketplace

The final plat, Old Towne Marketplace – 12th plat, meets all the requirements of the City's subdivision regulations. The City Engineer has approved the civil engineering plans.

COMPREHENSIVE PLAN:

In reviewing the preferred land use plan within the 2014 Comprehensive Plan, the plan illustrates this area to be mixed between commercial and multi-family. The proposed rezoning and preliminary development plan would be consistent with the character and intent of the long-range plan for the city.

PUBLIC INFORMATION AND PROCESS:
N/A

PLANNING AND ZONING COMMISSION RECOMMENDATION:

The Planning and Zoning Commission recommended approval at their May 13, 2020 meeting.

STAFF RECOMMENDATION:

Staff recommends approval of the Final Development Plan and Final Plat for the Lofts at Old Towne Marketplace.

CITY OF GRAIN VALLEY BOARD OF ALDERMEN AGENDA ITEM		
MEETING DATE	6/8/2020	
BILL NUMBER	B20-13	
AGENDA TITLE	**AN ORDINANCE AMENDING CHAPTER 400, ZONING REGULATIONS, OF THE CODE OF ORDINANCES, IN SECTIONS 400.040 (DEFINITIONS); SECTION 400.220 (ADDITIONAL CONTROLS) AND SECTION 400.230 (ACCESSORY USES)**	
REQUESTING DEPARTMENT	COMMUNITY DEVELOPMENT	
PRESENTER	MARK TROSEN, DIRECTOR	
FISCAL INFORMATION	Cost as recommended:	N/A
	Budget Line Item:	N/A
	Balance Available	N/A
	New Appropriation Required:	[] Yes [X] No
PURPOSE	To amend Chapter 400, Zoning Regulations, pertaining to definitions on building line, yards, and requirements for fence setbacks on corner lot	
BACKGROUND	The current regulations require a fence over 4 feet in height to be setback to the building line on a corner lot. These amendments would allow a fence on a corner lot to be 8 feet from the property line.	
SPECIAL NOTES	NONE	
ANALYSIS	Please see comparison of other City requirements for fencing.	
PUBLIC INFORMATION PROCESS	Public Notice was given on May 22, 2020 in the Examiner.	

BOARD OR COMMISSION RECOMMENDATION	The Planning and Zoning Commission held a public hearing on May 13, 2020. The Commission voted to recommend approval with two revisions: 1) the use of sight versus site; and 2) list allowable fence materials by type.
DEPARTMENT RECOMMENDATION	Staff Recommends Approval
REFERENCE DOCUMENTS ATTACHED	Ordinance, Planning and Zoning Resolution 2020-01, Comparison of Other City requirements for fencing.

CITY OF GRAIN VALLEY | **STATE OF MISSOURI**

BILL NO. *B20-13*

ORDINANCE NO. _____
SECOND READING _____
FIRST READING _____

AN ORDINANCE AMENDING CHAPTER 400, ZONING REGULATIONS, OF THE CODE OF ORDINANCES, IN SECTIONS 400.040 (DEFINITIONS); SECTION 400.220 (ADDITIONAL CONTROLS) AND SECTION 400.230 (ACCESSORY USES)

WHEREAS, the Planning and Zoning Commission proposed a text amendment to Chapter 400 to make changes to the Code of Ordinances of the City of Grain Valley to ensure compliance with state statute; and

WHEREAS, notice of the public hearing before the Planning and Zoning Commission to consider proposed text amendments were published in The Examiner on April 24, 2020; and

WHEREAS, on May 13, 2020, the Planning and Zoning Commission opened the public hearing and all those interested and wishing to testify were given the opportunity; and

WHEREAS, after the public hearing was closed, the Planning and Zoning Commission, by a vote of 6 in favor and 0 against, recommended approval of Resolution No. 2020-01 as amended; and

WHEREAS, the exhibits, testimony, and all documents presented to the Planning and Zoning Commission, as well as the Planning and Zoning Commission's deliberation (which is memorialized in the minutes from the May 13, 2020 meeting) were submitted to the Board of Aldermen as the Planning and Zoning Commission's final report on the proposed text amendment; and

WHEREAS, notice of the public hearing before the Board of Aldermen to consider the proposed text amendment was published in The Examiner on May 22, 2020; and

WHEREAS, on June 8, 2020, the Board of Aldermen held a public hearing on the proposed text amendments and accepted the Planning and Zoning Commission's resolution and now desires to amend Chapter 400 of the Code of Ordinances of the City of Grain Valley to include amended text in Sections 400.040 (Definitions), Section 400.220 (Additional Controls) and Section 400.230 (Accessory Uses).

NOW THEREFORE, BE IT ORDAINED by the Board of Aldermen of the City of Grain Valley, Missouri as follows:

SECTION 1: That Chapter 400, Zoning Regulations, of the Code of Ordinances of the City of Grain Valley Missouri be amended to include text to read as follows:

Section 400.040 Definitions.

When used in this ordinance, the following words shall have the definitions set forth below:

BUILDING LINE: The line parallel to the respective lot line and internal to the lot that defines the required building setback as specified in the zoning district. No building or other structure or portion thereof, except as provided in this Code, may be erected above the grade level.

LOT – CORNER: A lot abutting upon two (2) or more streets at their intersection. A "corner lot" shall be deemed to front on that street on which it has its least dimension, unless otherwise specified by the Director of Community Development.

YARD – FRONT: A yard across the full width of the lot extending from the front line of the main building to the front line of the lot.

Section 400.220 (C) Obstructions of Sight Distance at Intersections and Drive.

1) Landscaping, fences, signs, buildings and other obstructions shall not be placed to interfere with the line of sight between two and one-half (2 ½) feet and eight (8) feet above the curb or street surface within the following defined locations:

a. A triangular area formed by an imaginary line that follows street pavement edges and line connecting them 25 feet from point of intersection. This sight triangle standard may be increased by the City Engineer when deemed necessary for traffic safety.

Section 400.230 Accessory Uses.

2) C. 6.a. Below-grade pools, saunas and Jacuzzis.

(2) The area in which the below-grade use is located shall be entirely enclosed and separated from adjoining property by a protective fence or other permanent structure at least 48 inches in height, measured from grade with open spaces between members not exceeding four (4) inches. Such protective enclosure shall be provided with gates equipped with self-closing and self-latching devices. Refer to the latest adopted edition of the International Residential Code for additional regulations and standards.

C.6.b. Above-grade pools, saunas and Jacuzzis.

(2) The area in which the above-grade use is located shall be entirely enclosed and separated from adjoining property by a protective fence or other permanent structure at least 48 inches in height, measured from grade with open spaces between members not exceeding four (4) inches. Such protective enclosure shall be provided with gates equipped with self-closing and self-latching devices. Refer to the latest adopted edition of the International Residential Code for additional regulations and standards.

Exception: The above separate protective fence or other permanent structure need only be required around the area providing access to the swimming pool, sauna or jacuzzi when decking and railing, a minimum of at least 48 inches in height, measured from the exterior grade, meeting the guardrail requirements of the Building Code, totally surrounds the swimming pool, sauna or jacuzzi.

C.9. *Fences.*
Fences shall be constructed out of any of the following materials:

- Wood or vinyl simulating wood;
- Wrought iron or aluminum simulating wrought iron;
- Masonry: stone, brick, concrete with stone or brick veneer, or precast concrete simulated stone or brick;
- Composite or plastic; or
- Chain link (in the rear and side yard only).
    - The above fences are permitted in all zoning districts provided a building permit is obtained for a fee (see fee schedule) and the following conditions are met:

a. No fence shall be constructed that will constitute a traffic hazard. (See Section **400.220(C)**.)

b. No fence shall be located in the required front yard, except split rail and picket (wood or vinyl simulating wood, composite or plastic) or wrought iron or aluminum simulating wrought iron, not to exceed four (4) feet in height and slats with a minimum of two-inch spacing.

c. A fence over (4) feet in height cannot extend in front of the front surface of the residence and cannot be located closer than 8 feet to a street right-of-way on a corner lot.

d. Fences shall be limited to the height of six (6) feet for side and rear yards in any zone, except "M-1" and "M-2" zoned areas which allow eight (8) foot fences. Fences over six (6) feet must meet the requirements of the Building Code.

e. All fences shall be constructed with a finished surface facing outward from the property. Any posts or support beams shall be inside the finished surface or designed to be an integral part of the finished surface.

f. Fences for security in non-residential districts or fences around recreation amenities such as tennis courts or pools may be exempt from the location, height and material standards by the Director of Community Development.

g. Any fence proposed across a drainage way or drainage easement shall require review and approval by the Director of Community Development.

h. Barbed wire and electric fences are not permitted except in agricultural zoning districts and as identified in this Section.

i. Barbed wire is permitted in "M-1" and "M-2"zoning districts only on brackets over six (6) feet fences, for security purposes.

SECTION 2: This Ordinance shall be in full force and effect from and after the date of its passage and approval.

SECTION 3: The provisions of this Ordinance are severable and if any provision hereof is declared invalid, unconstitutional or unenforceable, such determination shall not affect the validity of the remainder of this Ordinance.

SECTION 4: All existing Ordinances or parts of Ordinances in conflict with this Ordinance are hereby repealed to the extent of the conflict.

Read two times and PASSED by the Board of Aldermen this ___day of_____, *2020*, the aye and nay votes being recorded as follows:

ALDERMAN BASS	_____	ALDERMAN CLEAVER	_____
ALDERMAN HEADLEY	_____	ALDERMAN STRATTON	_____
ALDERMAN TOTTON	_____	ALDERMAN WEST	_____

Mayor _____ (in the event of a tie only)

Approved as to form:

_____
Lauber Municipal Law
City Attorney

_____
Mike Todd
Mayor

ATTEST:

_____
Jamie Logan
City Clerk

RESOLUTION NO: 2020-01

A RESOLUTION OF THE PLANNING & ZONING COMMISSION OF THE CITY OF GRAIN VALLEY, MISSOURI, RECOMMENDING TO THE BOARD OF ALDERMEN THAT CHAPTER 400, ZONING REGULATIONS, OF THE CODE OF ORDINANCES BE AMENDED IN SECTION 400.040 (DEFINITIONS), SECTION 400.220 (ADDITIONAL CONTROLS) AND SECTION 400.230 (ACCESSORY USES).

WHEREAS, the Planning & Zoning Commission of the City of Grain Valley, Missouri now desires to recommend to the Board of Aldermen of the City that Chapter 400 of the Code of Ordinances of the City of Grain Valley be amended in Section 400.040 (Definitions), Section 400.220 (Additional Controls) and Section 400.230 (Accessory Uses) pertaining to fencing requirements and associated regulations.

NOW, THEREFORE, BE IT RESOLVED BY THE PLANNING & ZONING COMMISSION OF THE CITY OF GRAIN VALLEY, MISSOURI, AS FOLLOWS, TO WIT:

SECTION 1. That the Planning & Zoning Commission of the City of Grain Valley, Missouri, hereby recommends that Chapter 400, Zoning Regulations, of the Code of Ordinances of the City of Grain Valley, Missouri be amended to read as follows:

1) **Section 400.040 Definitions.**

Building Line: ~~The line between which and the street line or lot line.~~ The line parallel to the respective lot line and internal to the lot that defines the required building setback as specified in the zoning district. No building or other structure or portion thereof, except as provided in this Code, may be erected above the grade level. ~~The building line is considered a vertical surface intersecting the ground on such line.~~

Lot – Corner: A lot abutting upon two (2) or more streets at their intersection. A "corner lot" shall be deemed to front on that street on which it has its least dimension, unless otherwise specified by the Director of Community Development.

Yard – Front: A yard across the full width of the lot extending from the front line of the main building to the front line of the lot. ~~including the yard in all directions to abutting streets~~.

2) **Section 400.220 (C) Obstructions of Sight ~~Site~~ Distance at Intersections and Drive.**

1. Landscaping, fences, signs, buildings and other obstructions shall not be placed to interfere with the line of sight ~~site~~ between two and one-half (2 ½) feet and eight (8) feet above the curb or street surface within the following defined locations:
    - ~~a.~~ a. A triangular area formed by an imaginary line that follows street pavement edges and line connecting them 25 feet from point of intersection. This sight triangle standard may be increased by the City Engineer when deemed necessary for traffic safety. ~~A one hundred forty~~

~~(140) foot by twenty (20) foot area in each direction from street intersections which are regulated by stop signs and street/driveway intersections serving commercial or industrial businesses.~~

~~b. A seventy-five (75) foot by seventy-five (75) foot area in each direction from street intersections which are not regulated by stop signs.~~

~~c. A twenty-five (25) foot by twenty-five (25) foot area in each direction from two (2) or more vehicular driveways.~~

3) Section 400.230 Accessory Uses.

C. 6.a. Below-grade pools, saunas and Jacuzzis.

(2) The area in which the below-grade use is located shall be entirely enclosed and separated from adjoining property by a protective fence or other permanent structure ~~not less than six (6) feet~~ at least 48 inches in height, measured from grade with open spaces between members not exceeding four (4) inches. Such protective enclosure shall be provided with gates equipped with self-closing and self-latching devices. Refer to the latest adopted edition of the International Residential Code for additional regulations and standards.

C.6.b. Above-grade pools, saunas and Jacuzzis.

(2) The area in which the above-grade use is located shall be entirely enclosed and separated from adjoining property by a protective fence or other permanent structure ~~not less than six (6) feet~~ at least 48 inches in height, measured from grade with open spaces between members not exceeding four (4) inches. Such protective enclosure shall be provided with gates equipped with self-closing and self-latching devices. Refer to the latest adopted edition of the International Residential Code for additional regulations and standards.

Exception: The above separate protective fence or other permanent structure need only be required around the area providing access to the swimming pool, sauna or jacuzzi when decking and railing, a minimum of ~~six (6) feet~~ at least 48 inches in height, measured from the exterior grade, meeting the guardrail requirements of the Building Code, totally surrounds the swimming pool, sauna or jacuzzi.

C.9. *Fences.* ~~Wood, chain link, masonry, wrought iron and plastic~~

Fences shall be constructed out of any of the following materials:

- Wood or vinyl simulating wood;
- Wrought iron or aluminum simulating wrought iron;
- Masonry: stone, brick, concrete with stone or brick veneer, or precast concrete simulated stone or brick;

- Plastic: composite or plastic; or

- Chain link (in the rear and side yard only).

The above fences are permitted in all zoning districts provided a building permit is obtained for a fee ~~of thirty five dollars ($35.00)~~ (see fee schedule) and the following conditions are met:

a. No fence shall be constructed that will constitute a traffic hazard. (See Section **400.220(C)**.)

b. No fence shall be located in the required front yard, except split rail and picket (wood or vinyl simulating wood, composite or plastic) or wrought iron or aluminum simulating wrought iron, not to exceed four (4) feet in height and slats with a minimum of two-inch spacing.

c. A fence over (4) feet in height cannot extend in front of the front surface of the residence and cannot be located closer than 8 feet to a street right-of-way on a corner lot.

d. Fences shall be limited to the height of six (6) feet for side and rear yards in any zone, except "M-1" and "M-2" zoned areas which allow eight (8) foot fences. Fences over six (6) feet must meet the requirements of the Building Code.

e. All fences shall be constructed with a finished surface facing outward from the property. Any posts or support beams shall be inside the finished surface or designed to be an integral part of the finished surface.

f. Fences for security in non-residential districts or fences around recreation amenities such as tennis courts or pools may be exempt from the location, height and material standards by the Director of Community Development.

g. Any fence proposed across a drainage way or drainage easement shall require review and approval by the Director of Community Development.

h. Barbed wire and electric fences are not permitted except in agricultural zoning districts and as identified in this Section.

i. Barbed wire is permitted in "M-1" and "M-2"zoning districts only on brackets over six (6) feet fences, for security purposes.

SECTION 2. That this Resolution shall be in full force and effect immediately upon its execution by the Planning & Zoning Commission of the City of Grain Valley, Missouri.

PASSED AND APPROVED BY THE PLANNING & ZONING COMMISSION OF THE CITY OF GRAIN VALLEY, MISSOURI, THIS _____ DAY OF _____, 2020.

_____
Chairperson

ATTEST:

_____
City Clerk

	Grain Valley	Blue Springs	Oak Grove	Lee's Summit	Greenwood
Fence Setback on Corner Lot	Building Line on Plat for 6-foot fences and 4-foot fences that do not obstruct sight distance	6-foot high fence, the setback is 8 feet from the street side property line and 4-foot high fence must not obstruct sight triangle	Any fence over 4 feet in height shall be setback from the ROW line at least 8 feet, except wrought iron fence	Fence over four feet shall not extend beyond the face of the house on the lot; up to four feet may extend to front property line, provided it does not obstruct the sight triangle	Fence cannot be located closer than 6 feet to a collector street or local street right-of-way.
Allowable Fence Materials	Wood, Chain Link, Masonry, wrought iron and plastic	Wood or vinyl simulating wood; wrought iron or aluminum simulating wrought iron; stone, brick, concrete with stone or brick veneer; chain link or vinyl clad chain link	Prohibited – fences constructed of barbed wire unless barbed wire is at least 6 feet above ground; more than 2 materials; cloth or canvas; used as fences; electrified fences.	Only wood, vinyl, steel, masonry or wrought iron materials may be used for residential fence	Decorative fence – wood, vinyl, wrought iron, square tubing and/or metal pipe. Privacy fence- wood or vinyl, except posts which can be metal. Open Wire-woven wire and chain link
Allowable Fence in Front Yard	Split rail and picket (wood or plastic) or wrought iron, not to exceed 4 feet in height.	No higher than 4 feet; limited to ornamental or decorative materials; have transparency or voids of at least 33%	No higher than four feet.	Decorative wall, or fence consisting of slats with a minimum of two-inch spacing not exceeding four feet in height	Decorative fence, 3 feet or less in height; extend no further than 12 feet in front of the front surface of residence; no closer than 6 feet to ROW
Allowable Height	6 feet for side and rear yards in any zone, except M-1 and M-2 allow 8-foot fences	6 feet in residential and 8 feet in all other districts	8 feet in height; fencing around tennis courts and other rec amenities are exempt	6 feet in residential	8 feet in height
Sight Distance Obstruction	Can not be installed to interfere with line of site between 2 ½ feet and 8 feet above curb within defined locations: 1) 140 feet x 20 feet in each direction regulated by stop sign; 2) 75 foot by 75 foot in each direction with no stop signs; 3) 25 feet by 25 feet in each direction from 2 or more driveways.	Site distances are based on criteria in the latest edition of the AASHTO Green Book.	Nothing placed or constructed to impede vision between 2 feet and 8 feet above grade within a triangular area formed by an imaginary line that follows street pavement edges and line connecting them 25 feet from point of intersection.	Sight triangle is normally formed by lines at least 25 feet in length along the edges of the pavement of intersecting streets or a driveway intersecting a street	Visibility triangle in which no fence or planting which obstruct sight lines and elevations between 2 feet and 8 feet above roadway shall be located within a triangular area formed by the ROW lines and a line connecting them at points 25 feet from their point of intersection
Definition – Building Line	Line between the street or lot line where no building or other structure may be built above grade level	Build-To Lines. At which point or within a front building line shall be established	Line parallel to a street or ROW line established on a lot for the purpose of prohibiting construction of building or structure.	Line parallel to the respective lot line and internal to the lot that defines the required building setback as specified in the zoning district.	Line behind the street line and lot side lines. No building or other structure may be erected, except by Code.
Definition – Front Yard	Yard across the full width of lot extending from the front line of building to front line of lot including the yard in all directions to abutting streets	Distance between property line and buildable area	Open space extending the full width of the lot between the nearest principal building and the front lot line	Yard across the full width of the lot extending from the front line of the main building to the front line of the lot	Yard across the full width of the lot extending from the front line of the main building to the front line of the lot
Definition – Corner Lot	A lot abutting upon two or more streets at their intersection.	Lot abutting upon two or more streets; street side yard setback	A lot situated at the intersection of two or more streets	A lot abutting upon two or more streets at their intersection.	Lot abutting 2 or more streets at their intersection. Front on the street with least dimensions

February 28, 2020

Staff/ Committee Reports

INTENTIONALLY LEFT BLANK

MUNICIPAL DIVISION SUMMARY REPORTING FORM

Refer to instructions for directions and term definitions. Complete a report each month even if there has not been any court activity

I. COURT INFORMATION	Contact information same as last report ☐	
	Municipality: GRAIN VALLEY	Reporting Period: May, 2020
Mailing Address: 711 MAIN	Software Vendor: Tyler Technologies	
Physical Address: 711 MAIN	County JACKSON	Circuit: 16
Telephone Number: (816) 847-6240	Fax Number: (816) 847-6209	
Prepared By: Kari Boardman	E-mail Address kboardman@cityofgrainvalley.or	iNotes ☐
Municipal Judge(s): SUSAN WATKINS	Prosecuting Attorney: JEREMY COVER	

II. MONTHLY CASELOAD INFORMATION	Alcohol & Drug related Traffic	Other Traffic	Non-Traffic Ordinance
A. Cases *(citations / informations)* pending at start of month	139	1,697	316
B. Cases *(citations / informations)* filed	9	19	20
C. Cases *(citations / informations)* disposed			
1. jury trial *(Springfield, Jefferson County, and St. Louis County only)*	0	0	0
2. court / bench trial - GUILTY	0	0	0
3. court / bench trial - NOT GUILTY	0	0	0
4. plea of GUILTY in court	2	12	2
5. Violations Bureau Citations *(i.e., written plea of guilty)* and bond forfeitures by court order *(as payment of fines / costs)*	0	2	1
6. dismissed by court	1	6	2
7. *nolle prosequi*	0	0	0
8. certified for jury trial *(not heard in the Municipal Division)*	0	0	0
9. **TOTAL CASE DISPOSITIONS**	3	20	5
D. Cases (citations / informations) pending at end of month [pending caseload = (A + B) - C9]	145	1,696	331
E. Trial de Novo and / or appeal applications filed	0	0	0

III. WARRANT INFORMATION ***(pre- & post-disposition)***		**IV. PARKING TICKETS**	
1. # Issued during reporting period	12	# Issued during period	1
2. # Served/withdrawn during reporting period	6	☐ Court staff does not process parking tickets	
3. # Outstanding at end of reporting period	382		

MUNICIPAL DIVISION SUMMARY REPORTING FORM

I. COURT INFORMATION	Municipality: GRAIN VALLEY	Reporting Period: May, 2020

V. DISBURSEMENTS

Excess Revenue (minor traffic and municipal ordinance violations, subject to the excess revenue percentage limitation)		Other Disbursements cont.	
Fines - Excess Revenue	$ 2,708.37		$
Clerk Fee - Excess Revenue	$ 156.00		$
Crime Victims Compensation (CVC) Fund surcharge - Paid to City/Excess Revenue	$ 4.81		$
Bond forfeitures (paid to city) - Excess Revenue	$ 0.00		$
Total Excess Revenue	$ 2,869.18		$
Other Revenue (non-minor traffic and ordinance violations not subject to the excess revenue percentage limitation)			$
Fines - Other	$ 2,810.03		$
Clerk Fee - Other	$ 216.00		$
Judicial Education Fund (JEF) ☒ Court does not retain funds for JEF	$ 0.00		$
Peace Officer Standard and Training (POST) Commission surcharge	$ 30.00		$
Crime Victims Compensation (CVC) Fund surcharge - Paid to State	$ 213.90		$
Crime Victims Compensation (CVC) Fund surcharge - Paid to City/Other	$ 6.66		$
Law Enforcement Training (LET) Fund surcharge	$ 62.00		$
Domestic Violence Shelter surcharge	$ 124.00		$
Inmate Prisoner Detainee Security Fund surcharge	$ 0.00		$
Sheriff's Retirement Fund (SRF) surcharge	$ 93.73		$
Restitution	$ 150.00		$
Parking ticket revenue *(including penalties)*	$ 0.00		$
Bond forfeitures *(paid to city)* - Other	$ 0.00		$
Total Other Revenue	$ 3,706.32	**Total Other Disbursements**	$ 61.00
Other Disbursements: Enter below additional surcharges and/or fees not listed above. Designate if subject to the excess revenue percentage limitation. Examples include, but are not limited to, arrest costs, witness fees, and board bill/jail costs.		**Total Disbursements of Costs, Fees, Surcharges and Bonds Forfeited**	$ 6,636.50
OFFICER REIMBURSEMENT DWI	$ 61.00	**Bond Refunds**	$ 550.00
	$	**Total Disbursements**	$ 7,186.50