CITY OF GRAIN VALLEY, MISSOURI

GRAIN VALLEY
MISSOURI
LIFE OUTSIDE THE LINES

BIDDING AND CONTRACT DOCUMENTS,
AND TECHNICAL SPECIFICATIONS

FOR THE

WATER TOWER UPGRADE

MAY 2025

Prepared by:

CRAWFORD, MURPHY & TILLY, INC.
100 Main Street, Suite 1210
Kansas City, MO 64105

CMT
Crawford, Murphy & Tilly

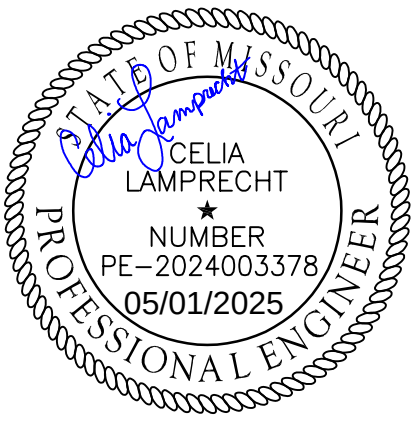

CITY OF GRAIN VALLEY

WATER TOWER UPGRADE

TABLE OF CONTENTS

SECTION NUMBER	SECTION TITLE	PAGE NUMBER	
BIDDING REQUIREMENTS			
	Advertisement for Bids	A	1-2
	Instructions to Bidder	IB	1-8
00 25 00	Pre-Bid and Bid Opening Meetings	00 25 00	1
	Missouri E-Verify Affidavit	EV	1-2
	Bidder's Affidavit	BA	1-2
00 45 19	Non Collusion Affidavit	00 45 19	1
	Bid Form	BF	1-7
	Bidding Requirements	BR	1-2
293113v1	Bid Bond Form	BB	1-2
00 43 25	Proposed Product Substitutions	00 43 25	1
00 43 36	Proposed Subcontractors	00 43 36	1-2
	Bid Guaranty	BG	1
CONTRACTING REQUIREMENTS			
295890v1	Notice of Award	NA	1
	Agreement (Unit Price)	AUP	1-5
	Notice to Proceed	NTP	1
293135v1	Performance Bond	PEB	1-2
293137v1	Payment Bond	PAB	1-2
	Maintenance Bond	MB	1-2
00 62 11	Submittal Transmittal	00 62 11	1-2
00 62 76	Contractors Application for Payment	00 62 76	1-3
	Contractor's Affidavit and Release for Partial Payment	APP	1
00 63 13	Request for Interpretation	00 63 13	1-2
00 63 33	Substitution Request	00 63 33	1-2
293146v1	Certificate of Substantial Completion	CSP	1
00 65 19.13	Contractor's Affidavit of Payment of Debts and Claims	00 65 19.13	1
00 65 19.16	Contractor's Affidavit of Release of Liens	00 65 19.16	1
293150v1	Receipt and Release Final	RR	1
293149v1	Consent of Surety Company to Final Payment	CS	1
00 70 00	General Conditions Table of Contents - 295893v1	GC	i-iii
00 70 00	General Conditions - 295893v1	GC	1-45
00 80 00	Supplementary Conditions	00 80 00	1-8
00 81 00	Definitions and Format Explanation	00 81 00	1-4
	Missouri Project Exemption Certificate	MOPEC	1
	Missouri Division of Labor Standards Wage Order 31	AWO	1-4
	Missouri Statement of Compliance	MO-SC	1
	Missouri Affidavit of Compliance with Prevailing Wage Law	PW	1
00 94 00	Work Change Directive	00 94 00	1
00 94 10	Change Order	00 94 10	1
00 94 20	Field Order	00 94 20	1

SECTION NUMBER	SECTION TITLE	PAGE NUMBER
DIVISION 1 – GENERAL REQUIREMENTS		
01 01 10	Site Conditions	01 01 10 1-2
01 11 00	Summary of Project	01 11 00 1-4
01 20 00	Payment Procedures	01 20 00 1-3
01 22 00	Unit Prices	01 21 00 1-2
01 25 13	Product Substitution Procedures	01 25 13 1-3
01 26 00	Contract Modification Procedures	01 26 00 1-4
01 31 50	Mechanical and Electrical Coordination	01 31 50 1-5
01 32 01	Construction Schedules	01 32 01 1-2
01 33 00	Submittal Procedures	01 33 00 1-7
01 35 26	Safety Requirements and Protection of Property	01 35 26 1-4
01 42 20	Abbreviations	01 42 20 1-6
01 43 50	Manufacturers Services	01 43 50 1-2
01 45 00	Quality Requirements	01 45 00 1-5
01 50 00	Temporary Construction Facilities and Controls	01 50 00 1-8
01 51 13	Temporary Power	01 51 13 1-2
01 55 00	Vehicular Access and Parking	01 55 00 1-2
01 55 26	Traffic Control	01 55 26 1-2
01 56 00	Barriers	01 56 00 1-2
01 58 00	Licenses, Easements and Permits	01 58 00 1-2
01 60 00	Product Requirements	01 60 00 1-3
01 70 00	Cleaning	01 70 00 1-4
01 72 50	Field Engineering	01 72 50 1-2
01 75 00	Starting and Adjusting	01 75 00 1-2
01 76 00	Protecting Installed Construction	01 76 00 1-2
01 78 00	Closeout Procedures	01 78 00 1-5
01 78 10	Project Record Documents	01 78 10 1-3
01 78 23	Operation and Maintenance Manuals	01 78 23 1-7
01 79 00	Demonstration and Training	01 79 00 1-5
01 91 00	Commissioning	01 91 00 1-3
DIVISION 02 – EXISTING CONDITIONS		
02 30 00	Subsurface Investigation	02 30 00 1-2
DIVISION 03 – CONCRETE		
03 05 00	Common Work Results for Concrete	03 05 00 1-5
03 05 60	Precast Concrete Products	03 05 60 1-10
03 11 00	Concrete Forming	03 11 00 1-6
03 15 00	Concrete Accessories	03 15 00 1-4
03 20 00	Concrete Reinforcing	03 20 00 1-6
03 31 00	Structural Concrete	03 31 00 1-17
03 39 00	Concrete Curing	03 39 00 1-5
03 60 00	Grouting	03 60 00 1-6
DIVISION 04 – MASONRY – NOT USED		

SECTION NUMBER	SECTION TITLE	PAGE NUMBER
DIVISION 05 – METALS		
05 50 00	Metal Fabrications	05 50 00 1-13
05 52 00	Metal Railings	05 52 00 1-4
05 53 00	Metal Gratings	05 53 00 1-7
DIVISION 06 – WOOD, PLASTICS AND COMPOSITES – NOT USED		
DIVISION 07 - THERMAL AND MOISTURE PROTECTION		
07 92 00	Joint Sealants	07 92 00 1-7
DIVISION 08 – DOORS AND WINDOWS		
08 11 13	Hollow Metal Doors & Frames	08 11 13 1-10
08 33 23	Overhead Coiling Doors	08 33 23 1-5
08 71 00	Door Hardware	08 71 00 1-10
DIVISION 09 – FINISHES		
09 96 00	High Performance Coatings	09 96 00 1-24
DIVISION 10 – SPECIALTIES		
10 52 00	Fire Protection Specialties	10 52 00 1-4
DIVISION 11-12 – NOT USED		
DIVISION 13 – SPECIAL CONSTRUCTION		
13 21 10	Composite Elevated Water Storage Tank	13 21 10 1-29
DIVISION 14-25 – NOT USED		
DIVISION 26 – ELECTRICAL		
26 01 26	Testing Electrical Systems	26 01 26 1-3
26 05 00	Common Work Results for Electrical	26 05 00 1-5
26 05 19	Low-Voltage Electrical Power Conductors and Cables	26 05 19 1-6
26 05 26	Grounding and Bonding for Electrical Systems	26 05 26 1-8
26 05 29	Hangers and Supports for Electrical Systems	26 05 29 1-3
26 05 33	Raceway and Boxes for Electrical Systems	26 05 33 1-8
26 05 53	Identification for Electrical Systems	26 05 53 1-3
26 27 26	Wiring Devices	26 27 26 1-5
26 27 30	Mini Power Centers	26 27 30 1-4
26 28 16	Enclosed Switches and Circuit Breakers	26 28 16 1-4
DIVISION 27 - 30 – NOT USED		

SECTION NUMBER	SECTION TITLE	PAGE NUMBER	
DIVISION 31 – EARTHWORK			
31 11 00	Site Preparation	31 11 00	1-2
31 23 00	Excavation and Fill	31 23 00	1-10
31 23 19	Dewatering	31 23 19	1-4
31 23 33	Trenching and Backfilling	31 23 33	1-11
31 25 00	Erosion and Sedimentation Control	31 25 00	1-3
31 32 00	Soil Stabilization	31 32 00	1-4
31 41 00	Shoring	31 41 00	1-7
DIVISION 32 – EXTERIOR IMPROVEMENTS			
32 12 16	Asphalt Paving	32 12 16	1-4
32 15 40	Aggregate Surface	32 15 40	1-3
32 31 00	Fences and Gates	32 31 00	1-3
32 90 00	Planting	32 90 00	1-8
DIVISION 33 – UTILITIES			
33 01 10.58	Disinfection of Water Utility Piping Systems	33 01 10.58	1-5
33 05 05	Utility Testing Forms	33 05 05	1-4
33 14 16	Public Water Utility Distribution Piping	33 14 16	1-13
DIVISION 34-39 – NOT USED			
DIVISION 40 - PROCESS INTERCONNECTIONS			
40 05 06	Couplings, Adapters and Specials for Process Piping	40 05 06	1-4
40 05 07	Sleeves, Supports, Hangers, Anchors and Seals	40 05 07	1-7
40 05 24	Fabricated Welded Steel Pipe and Fittings	40 05 24	1-6
40 05 51	General Requirements for Valves and Valve Actuators	40 05 51	1-6
40 05 53	Valves	40 05 53	1-6
40 05 53.2	Electronic Control Valves	40 05 53.2	1-6
40 72 00	Level Sensing and Measurement	40 72 00	1-7
40 73 13	Pressure Control	40 73 13	1-2
DIVISION 41 - 45 – NOT USED			
DIVISION 46 – ADDITIONAL WATER EQUIPMENT			
46 46 23	Tank Mixing System	46 46 26	1-6

APPENDICIES

APPENDIX A – Geotechnical Engineering Report Prepared by Terracon
APPENDIX B – Grain Valley Standard Detail Drawings
APPENDIX C – FAA Determination Letter
Aeronautical Study No. 2024-ACE-6489-OE
APPENDIX D – Bid Alternate No. 2 – Tri-County Water Authority Proposed Emergency Connection Plan Sheet
APPENDIX E – City of Grain Valley Logo and Color Palette
APPENDIX F – MDNR Design Standard Exception Request Form

CITY OF GRAIN VALLEY

WATER TOWER UPGRADE

TABLE OF CONTENTS

SECTION NUMBER	SECTION TITLE	PAGE NUMBER	
BIDDING REQUIREMENTS			
	Advertisement for Bids	A	1-2
	Instructions to Bidders	IB	1-8
00 25 00	Pre-Bid and Bid Opening Meetings	00 25 00	1
	Missouri E-Verify Affidavit	EV	1-2
	Bidder's Affidavit	BA	1-2
00 45 19	Non Collusion Affidavit	00 45 19	1
	Bid Form	BF	1-7
	Bidding Requirements	BR	1-2
293113v1	Bid Bond	BB	1-2
00 43 25	Proposed Product Substitutions	00 43 25	1
00 43 36	Proposed Subcontractors	00 43 36	1-2
	Bid Guaranty	BG	1

CITY OF GRAIN VALLEY, MISSOURI
("Owner")

COMMUNITY DEVELOPMENT DEPARTMENT

WATER TOWER UPGRADE

ADVERTISEMENT FOR BIDS

Sealed Bids will be received by the City of Grain Valley at City Hall, 711 Main Street, Grain Valley, Missouri until **1:00 p.m. on June 24TH, 2025**. At said place and time, all Bids that have been duly received will be publicly opened and read aloud in the Lower Level Conference Room on Microsoft Teams. See Pre-Bid and Bid Opening Meetings Section for Microsoft Teams meeting ID and Passcode.

The Work is generally described as follows:

A 1-million gallon composite elevated water tower is to be constructed at 1201 Tyer Road and to operate in conjunction with the existing 0.5-million gallon water tower to account for the expected population growth.

All Bids must be in accordance with the Bidding Documents, including, Drawings, Specifications, and Contract Documents on file at the Community Development Department, located in City Hall, 711 Main Street, Grain Valley, Missouri.

Copies of plans, specifications, bid documents, and other Contract Documents can be seen and downloaded on-line at www.cityofgrainvalley.org. Information regarding this project can be found under the "Bid Notices" link on the website. Prospective bidders desiring hard copies of the Contract Documents for use in preparing bids may obtain a set of such documents from the City of Grain Valley Community Development Department, 711 S. Main Street, Grain Valley, MO 64029. Any questions regarding the project, plans, specification, or bid documents should be directed to CMT and copy Patrick Martin, City Representative at (816) 215-9659 or pmartin@cityofgrainvalley.org.

Bids will be received on a unit price basis.

Each Bid shall be accompanied by a certified check, made payable to the City of Grain Valley, Missouri in an amount not less than five percent (5%) of the total Bid or by a Bid Bond with a Surety licensed to do business in the State of Missouri in the amount of five percent (5%) of the total Bid. This Security may be retained by the Owner until the Contract for the Project has been fully executed.

The Contractor and all subcontractors will be required to comply with all applicable Federal and State labor regulations including Equal Employment Opportunity, Non-segregated Facilities, Minimum Wage Rates and Affirmative Action requirements. The City of Grain Valley hereby notifies all Bidders that it will affirmatively ensure that in any Contract entered into pursuant to this Advertisement, minority business enterprises will be afforded full opportunity to submit Bids without discrimination, regardless of race, color, or national origin in consideration for any award.

Wage rates paid for Work for this Project shall be at least equal to the prevailing wage rates as determined by the Division of Labor Standards of the State of Missouri.

The project contractor and each subcontractor shall require each on-site employee to complete the ten-hour safety program required under Section 292.675, RSMo, within 30 days of beginning any of the work on the project if he or she has not previously completed the program or does not have documentation of having done so.

All bids are subject to the Buy Local/American policy and any other applicable purchasing statutes of the State of Missouri.

No bidder may withdraw its Bid within 90 days after the actual date of the opening of Bids. The City of Grain Valley will evaluate bids based on the most responsive and responsible bid. The contract award is subject to Board of Aldermen approval and certification by the Purchasing Officer, as required by Article III, Section E and Article IX of the City's Purchasing Policy. The City of Grain Valley, Missouri reserves the right to award the Contract by sections, to reject any or all Bids, and to waive any informalities or irregularities therein.

Owner: City of Grain Valley, Missouri Advertisement Date: 5/28/2025

PRE-BID CONFERENCE

A mandatory pre-bid conference will be held on Microsoft Teams at 10:00AM on June 10th, 2025. See Pre-Bid and Bid Opening Meetings Section for Microsoft Teams meeting ID and Passcode. Representatives of Owner will be present to discuss the Project. Bidders are required to attend and participate in the conference. Owner will transmit to all prospective Bidders of record such Addenda as Owner considers necessary in response to questions arising at the conference. Oral statements may not be relied upon and will not be binding or legally effective.

END OF DOCUMENT A

CITY OF GRAIN VALLEY, MISSOURI
("Owner")
711 MAIN STREET, GRAIN VALLEY, MO 64029
PHONE: (816) 847-6200 FAX: (816) 847-6209

WATER TOWER UPGRADE

INSTRUCTIONS TO BIDDERS

ARTICLE 1 - DEFINED TERMS

1.01 Terms used in these Instructions to Bidders will have the meanings indicated in the General Conditions of the Contract for Construction and any Supplementary Conditions as contained in the Bidding Documents. Additional terms used in these Instructions to Bidders have the meanings indicated below which are applicable to both singular and plural thereof:

A. *Bid* - The offer of a Bidder submitted on the prescribed form contained in the Bidding Documents setting forth the price(s) for the Work to be performed.

B. *Bidder*- The entity who submits a Bid for the Work described in the Contract Documents.

C. *Bidding Documents* - The Bidding Requirements and the Contract Documents (including *without* limitation all Drawings, Specifications and Addenda issued prior to receipt of Bids).

D. *Bidding Requirements* - The Advertisement for Bids or Invitation to Bid, these Instructions to Bidders, the Bid Form and *required* attachments as set forth in the Bidding Documents and Bid Security.

E. *Bid Security* - The deposit of an approved Bid Bond, Cashier's Check or Certified Check furnished by the Bidder and made payable to the Owner for the amount stipulated in the Advertisement for Bids or Invitation to Bid.

F. *Engineer* – Crawford Murphy & Tilly, 1100 Main Street, Suite 1210, Kansas City, Missouri 64105.

G. *Owner*- City of Grain Valley, Missouri, 711 Main, Grain Valley, Missouri 64029.

ARTICLE 2 - COPIES OF BIDDING DOCUMENTS

2.01 Copies of plans, specifications, bid documents, and other Contract Documents can be seen and downloaded on-line at www.cityofgrainvalley.org. Information regarding this project can be found under the "Bid Notices" link on the website. Prospective bidders desiring hard copies of the Contract Documents for use in preparing bids may obtain a set of such documents from the City of Grain Valley Community Development Department, 711 S. Main Street, Grain Valley, MO 64029. Any questions regarding the project, plans, specification, or bid documents should be directed to Celia Lamprecht, CMT at (816) 607-5921 or clamprecht@cmtengr.com and copy Patrick Martin, City Representative at (816) 215-9659 or pmartin@cityofgrainvalley.org.

2.02 Complete sets of Bidding Documents must be used in preparing Bids; Owner assumes no responsibility for errors or misinterpretations resulting from the use of incomplete sets of Bidding Documents.

Owner in making copies of the Bidding Documents available on the above terms do so only for the purpose of obtaining Bids for the Work and do not confer a license or grant for any other use.

ARTICLE 3 - QUALIFICATIONS OF BIDDERS

3.01 The Bidder must be qualified by experience, adequate financing, and equipment to perform the Work required by the Contract within the Contract Times.

3.02 To document Bidder's qualifications to perform the Work, Bidder shall submit written evidence such as financial data, previous experience, qualifications of personnel, present commitments, and other data regarding Bidder's qualifications with bid.

3.03 Manufacturer shall certify to not less than ten (10) years of experience in the design, fabrication and erection of elevated water storage tanks meeting AWWA requirements. Where this experience requirement is not met, submission of a bond or deposit shall be permitted instead of the specified experience period. The period of time for which the bond or deposit is required shall not exceed the experience period specified.

3.04 Manufacturer shall have designed and constructed at least five (5) new composite elevated tanks. Project information provided should include Project Name, Project Location, Owner, Contact Information, Project Cost, and Project Description with bid.

ARTICLE 4 - EXAMINATION OF BIDDING DOCUMENTS AND SITE

4.01 It is the responsibility of each Bidder, before submitting a Bid, to (a) thoroughly examine the Bidding Documents, (b) visit the site to become familiar with local conditions that may affect cost, progress, performance, or furnishing of the Work, (c) consider federal, state, and local laws and regulations that may affect cost, progress, performance, or furnishing of the Work, (d) study and carefully correlate Bidder's observations with the Bidding Documents, and (e) notify the City of all conflicts, errors, or discrepancies discovered by Bidder in the Bidding Documents.

4.02 Bidder must carefully study all reports of explorations and tests of subsurface conditions at or contiguous to the site and all drawings of physical conditions in or relating to existing surface or subsurface structures at or contiguous to the site which have been made available to Bidder but Bidder shall not be entitled to rely upon the accuracy or completeness of such reports or tests. Such reports and drawings are not Contract Documents and may not be complete for Bidder's purposes, including without limitation, any reports or test described in Appendix A. Owner does not assume responsibility for the accuracy or completeness of information and data shown or indicated in the Bidding Documents with respect to subsurface conditions, physical conditions or underground facilities at or contiguous to the site. Bidder must obtain and carefully study, and assume responsibility for all such additional or supplementary examinations, investigations, explorations, tests, studies, and data concerning conditions, including, but not limited to, surface, subsurface, and underground facilities, at or contiguous to the site or otherwise which may affect cost, progress, performance, or furnishing of the Work or which relate to any aspect of the means, methods, techniques, sequences, and procedures of construction to be employed by Bidder and safety precautions and programs incident thereto as Bidder deems necessary. Any discrepancies between the reports and drawings made available to the Bidder and the information revealed in the Bidder's own examinations, tests, studies, explorations or investigations of any type shall be immediately reported in writing by the Bidder to Professional.

4.03 Provisions concerning responsibilities for the adequacy of data furnished to prospective Bidders on subsurface conditions, underground facilities, and other physical conditions appear in the General Conditions.

4.04 Before submitting a Bid, each Bidder will be responsible to make or obtain such explorations, tests, and data concerning physical conditions, surface, subsurface, and underground facilities at or contiguous to the site or otherwise which may affect cost, progress, performance, or furnishing of the Work and which Bidder deems necessary to determine its Bid for performing and furnishing the Work in accordance with the time, price, and other terms and conditions of the Contract Documents. On reasonable notice, Owner will provide each Bidder access to the site to conduct such explorations and tests as each Bidder deems necessary for submission of a Bid. Bidder shall fill all holes, clean up, and restore the site to its former condition upon completion of such explorations. Each Bidder wishing to inspect the site and any existing facilities shall contact:

Patrick Martin, City Representative I 816.215.9659 I pmartin@cityofgrainvalley.org

Michael Myers I 816.847.6272 I mmyers@cityofgrainvalley.org

The submission of a Bid will constitute an incontrovertible representation by Bidder that Bidder has complied with the provisions of Section 4 of the Instructions to Bidders, that without exception the Bid is premised upon performing and furnishing the Work required by the Contract Documents, that Bidder has given Professional written notice of all conflicts, errors, ambiguities, and discrepancies that Bidder has discovered in the Bidding Documents and the written resolutions thereof by Professional are acceptable to Bidder, and that the Bidding Documents are sufficient in scope and detail to indicate and convey understanding of all terms and conditions for performance and furnishing of the Work.

ARTICLE 5 - SITE AND OTHER AREAS

5.01 The lands upon which the Work is to be performed and access thereto, and other lands designated for use by Contractor in performing the Work are identified in the Bidding Documents. All additional lands and access thereto required for temporary construction facilities, construction equipment, or storage of materials and equipment to be incorporated in the Work are to be obtained and paid for by Contractor.

ARTICLE 6 - INTERPRETATIONS AND ADDENDA

6.01 All questions about the meaning or intent of the Bidding Documents are to be directed to Design Professional and copied to the Owner. Questions concerning the Bidding Documents may be directed to:

Celia Lamprecht, Crawford Murphy & Tilly, 816.607.5921
clamprecht@cmtengr.com

6.02 Interpretations or clarifications considered necessary by Owner in response to such questions will be issued by Addenda. Questions received less than four (4) days prior to the date for the receipt of Bids may not be answered. Only answers issued by formal written Addenda will be binding. Oral and other interpretations or clarifications will be without legal effect. Addenda may also be issued to modify the Bidding Documents as deemed advisable by Professional. Such Addenda must also be in writing in order to be binding.

ARTICLE 7 - BID SECURITY

7.01 A Bid must be accompanied by Bid security made payable to Owner in an amount of five percent (5%) of Bidder's maximum Bid Price and in the form of a certified or bank check or a Bid Bond on the form attached issued by a surety meeting the requirements of the General Conditions.

7.02 The Bid Security of the Successful Bidder will be retained until such Bidder has executed the Contract Documents, furnished the required Contract Security and met the other conditions of the Notice of Award, whereupon the Bid Security will be returned. If the Successful Bidder fails to execute and deliver the Contract Documents and furnish the required contract security within fifteen (15) days after the Notice of Award, Owner may annul the Notice of Award and the Bid Security of that Bidder will be forfeited. The Bid Security of other Bidders whom Owner believes to have a reasonable chance of receiving the award may be retained by Owner until the earlier of seven (7) days after the Effective Date of the Agreement or ninety one (91) days after the Bid opening, whereupon Bid Security furnished by such Bidders will be returned.

7.03 Bid Security of other Bidders whom Owner believes do not have a reasonable chance of receiving the award will be returned within seven (7) days after the Bid opening.

ARTICLE 8 - CONTRACT TIMES

8.01 The Contract Times shall be the dates by which: (a) Contractor shall achieve Substantial Completion of the entire Work; and {b) Contractor shall achieve Final Completion of the entire Work. The Contract Times for the Project are set forth in Article 3 of the Agreement Between Owner and Contractor.

ARTICLE 9 - LIQUIDATED DAMAGES

9.01 Provisions for liquidated damages are set forth in Article 3 of the Agreement.

ARTICLE 10 - SUBSTITUTE AND "OR-EQUAL" ITEMS

10.01 The Contract, if awarded, will be on the basis of materials and equipment specified or described in the Bidding Documents without consideration of possible substitute or "or-equal" items. Whenever it is specified or described in the Bidding Documents that a substitute or "or-equal" item of material or equipment may be furnished or used by Contractor if acceptable to Owner, application for such acceptance will not be considered by Owner until after the Effective Date of the Agreement. The procedure for submission of any such application by Contractor and consideration by Owner is set forth in the General Conditions and may be supplemented in the General Requirements or the Supplementary Conditions.

ARTICLE 11 - SUBCONTRACTORS, SUPPLIERS AND OTHERS

11.01 If the Supplementary Conditions require the identity of certain Subcontractors, Suppliers, individuals, or entities to be submitted to Owner in advance of a specified date prior to the Effective Date of the Agreement, the apparent Successful Bidder, and any other Bidder so requested, shall within *five* (5) days after Bid opening, submit to Owner a list of all such Subcontractors, Suppliers, individuals, or entities proposed for those portions of the Work for which such identification is required. Such list shall be accompanied by an experience statement with pertinent information regarding similar projects and other

evidence of qualification for each such Subcontractor, Supplier, individual or entity if requested by Owner. If Owner or Professional after due investigation has reasonable objection to any proposed Subcontractor or Supplier, Owner may, before the Notice of Award is given, require the apparent Successful Bidder to submit a substitute, in which case, apparent Successful Bidder shall submit an acceptable substitute, and Bidder's Bid price will be adjusted in accordance with Paragraph 6.09 of the General Conditions.

11.02 Contractor shall not be required to employ any Subcontractor, Supplier, individual, or entity against whom Contractor has reasonable objection.

ARTICLE 12 - PREPARATION OF BID

12.01 The Bid Form is provided in the Bidding Documents. Bid Forms must be fully completed in ink or typewritten and include all required attachments.

12.02 Bids by corporations must be executed in the corporate name by the president or vice-president (or other corporate officer accompanied by evidence of authority to sign), and the corporate seal shall be affixed and attested by the secretary or an assistant secretary. The state of incorporation shall be shown below the corporate name. Bids by partnerships must be executed in the partnership name and signed by a partner (accompanied by evidence of authority to sign) and the official address of the partnership must be shown below the signature. Bids by joint ventures shall be signed by each participant in the joint venture or by an authorized agent of each participant. Bids by limited liability companies shall be executed in the name of the firm by a member and accompanied by evidence of authority to sign. The state of formation of the firm and the official address of the firm must be shown below the signature. All names shall be typed or printed in ink below the signatures. The address and telephone number for communications regarding the Bid shall be shown.

12.03 A Bid by a person who affixes to his signature the word "president", "secretary", "agent", or other designation without disclosing his principal may be held to be the bid of the individual signing.

12.04 All blank spaces in the Bid Form shall be filled.

12.05 The Bid shall contain an acknowledgment of receipt of all Bidding Documents.

12.06 Each Bid shall be accompanied by an executed Affidavit in the form attached hereto.

ARTICLE 13 - BASIS OF BID

13.01 The Bidder shall complete the schedule of unit prices included in the Bid Form and shall accept all fixed unit prices listed therein. The total Bid will be calculated as the sum of the products of the estimated quantity of each item and the unit price bid. Discrepancies in the multiplication of units of Work and unit prices will be resolved in favor of the unit prices. Discrepancies between the indicated sum of any column of figures and the correct sum thereof will be resolved in favor of the correct sum. The unit prices set forth in the Bid Form shall be considered complete and include: (1) all materials, equipment, labor, delivery, installation, overhead and profit; and (2) any other costs or expenses in connection with, or incidental to, the performance of that portion of the Work to which such unit prices apply. Any estimated quantities of Work contained in any Bidding Document or Contract Document are not guaranteed and are solely for the purpose of comparison of Bids. Estimated quantities may change because of changes ordered by Owner or because of actual site conditions or other reasons. The unit prices for the Work shall remain unchanged even if the actual quantity of Work performed by Contractor differs materially and significantly from any estimated quantity of such items. Contractor agrees that it shall make no claim for an adjustment in any unit price for any variance between the actual quantity of Work performed by Contractor and any estimated quantity of such item.

ARTICLE 14 - SUBMISSION OF BIDS

14.01 Bids shall be submitted no later than the date and time prescribed in the Advertisement or Invitation for Bids, or the modified time and place indicated by Addendum. The unbound copy of the Bid Form is to be completed and accompanied by all other required documents, including the Bid Security.

14.02 Bids shall be enclosed in an opaque sealed envelope plainly marked as a "Bid" with the Project title and marked with the name and address of the Bidder. If the Bid is sent through the mail or other delivery system, the sealed envelope shall be enclosed in a separate envelope with the notation "BID ENCLOSED" on the face of it.

14.03 Bids received after the time and date for receipt of Bids will be returned unopened. Bidder shall assume full responsibility for timely delivery at the location designated for receipt of Bids. Oral, telephone, telegraph, or facsimile Bids are invalid and will not receive consideration.

ARTICLE 15 - MODIFICATION AND WITHDRAWAL OF BIDS

15.01 No bid modification or withdrawal of bids once sealed bid has been submitted to the City.

ARTICLE 16 - OPENING OF BIDS

16.01 Bids will be opened and read aloud publicly on a Microsoft Teams meeting. See Pre-Bid and Bid Opening Meetings Section for Microsoft Teams meeting ID and Passcode. Upon request, an abstract of the amounts of the Base Bids and Bid Alternates (if any) will be made available to Bidders after the opening of Bids.

ARTICLE 17 - BIDS TO REMAIN SUBJECT TO ACCEPTANCE

17.01 All Bids will remain subject to acceptance for 90 days after the day of the Bid opening, but Owner may, in its sole discretion, release any Bid and return the Bid security prior to that date. Any extension of the commencement date for Work as specified in the Contract Documents shall be governed by the applicable provisions of the Contract Documents and shall not be grounds for withdrawal of a Bid.

ARTICLE 18 - APPROVAL BY BOAD OF ALDERMAN

18.01 The Contract will not be binding and effective on the City until approved by Resolution of the Board of Alderman of Grain Valley, Missouri.

ARTICLE 19 - AWARD OF CONTRACT

19.01 Owner reserves the right to reject any and all Bids, including, without limitation, the right to reject any or all bids which in the Owner's discretion are nonconforming, nonresponsive, unbalanced, or conditional Bids and to reject the Bid of any Bidder if Owner believes that it would not be in the best interest of the Project to make an award to that Bidder, whether because the Bid is not responsive or the Bidder is unqualified or of doubtful financial ability or fails to meet any other pertinent standard or criteria established by Owner. Owner also reserves the right to waive all informalities not involving price, time, or changes in the Work.

19.02 In evaluating Bids, Owner will consider the qualifications of the Bidders, whether or not the Bids comply with the prescribed requirements, and alternates, unit prices, and other data, as may be requested in the Bid Form or prior to the Notice of Award. The most responsive and responsible bid can be based the base bid only, or on any combination of the base bid and alternate bids.

19.03 Owner may conduct such investigations as Owner deems necessary to assist in the evaluation of any Bid and to establish the responsibility, qualifications, and financial ability of Bidders, proposed Subcontractors, Suppliers, and other persons and organizations to perform and furnish the Work in accordance with the Contract Documents to Owner's satisfaction within the prescribed time.

19.04 If the Contract is to be awarded, it will be awarded to the most responsive and responsible Bidder whose evaluation by Owner indicates to Owner that Bidder is responsible and qualified to perform the Work.

19.05 More than one Bid for the same Work from an individual or entity under the same or different names will not be considered. Reasonable grounds for believing that any Bidder has an interest in more than one Bid for the Work may be cause for disqualification of that Bidder and the rejection of all Bids in which that Bidder has an interest.

ARTICLE 20 - CONTRACT SECURITY AND INSURANCE

20.01 The General Conditions as may be modified by the Supplementary Conditions, set forth the requirements as to Performance and Payment Bonds and insurance. When the Successful Bidder delivers the executed Agreement to Owner, it must be accompanied by the required Performance and Payment Bonds.

ARTICLE 21 - EXECUTION OF AGREEMENT AND BONDS

21.01 When Owner gives a Notice of Award to the Successful Bidder, it will be accompanied by unsigned counterparts of the Agreement with other written Contract Documents attached; the required number of copies will be determined by Owner. Within fifteen (15) days thereafter Contractor shall sign, leaving the dates blank, and deliver the required number of counterparts of the Agreement and attached documents to Owner with the required Bonds and power of attorney. After confirmation of the Contract by action of the City, if required, or within fifteen (15) days if not required, Owner shall execute all copies of the Agreement and other Contract Documents submitted by Contractor/Successful Bidder, insert the date of Contract on the Agreement, Bonds, and power of attorney, and return all copies to Contractor for distribution. Distribution of signed copies shall be as directed by Owner.

ARTICLE 22 - TAXES AND PERMITS

22.01 Responsibility for payment of taxes and permits is set forth in the General Conditions. As set forth in the General Conditions, certain equipment and materials are exempt from State and Local Sales and Use taxes. Said taxes shall not be included in the Bid.

ARTICLE 23 - LAWS AND REGULATIONS

23.01 Provisions concerning Laws and Regulations are set forth in the Contract Documents.

23.02 Bids shall be based on payment by Contractor and each Subcontractor of wage rates not less than

the prevailing hourly wage for each craft or classification of workmen engaged on the Work as determined by the Industrial Commission of Missouri on behalf of the Department of Labor and Industrial Relations. Higher prevailing wage rates may apply if a federal governmental agency is providing funding for this Project. Requirements regarding payment of prevailing wage rates are set forth in the General Conditions.

23.03 Information on the Missouri Domestic Product Procurement (Buy American) Act is contained in the General Conditions.

23.04 A pre-Bid conference will be held on Microsoft Teams at 10:00 AM on June 10th, 2025. See Pre-Bid and Bid Opening Meetings Section for Microsoft Teams meeting ID and Passcode. Representatives of Owner will be present to discuss the Project. Bidders are required to attend and participate in the conference. Owner will transmit to all prospective Bidders of record such Addenda as Owner considers necessary in response to questions arising at the conference. Oral statements may not be relied upon and will not be binding or legally effective.

23.05 Successful bidder must obtain a City of Grain Valley Business License prior to the start of work.

END OF DOCUMENT IB

PRE-BID MEETING:

PROJECT:	Grain Valley Water Tower Upgrade
DATE:	Tuesday, June 10th, 2025
TIME:	10:00 AM
LOCATION:	**Microsoft Teams** Need help? **Join the meeting now** Meeting ID: 231 718 155 603 2 Passcode: fN9DD6sZ **Dial in by phone** +1 224-419-4630,,858160251# United States, Waukegan Find a local number Phone conference ID: 858 160 251#
PURPOSE:	1. Project Overview 2. Bidder Qualifications 3. Bidding Requirements 4. Schedule 5. Permit Requirements 6. Questions
ATTENDANCE:	Mandatory.

BID OPENING MEETING:

PROJECT:	Grain Valley Water Tower Upgrade
DATE:	Tuesday, June 24th, 2025
TIME:	1:00 PM
LOCATION:	**Microsoft Teams** Need help? **Join the meeting now** Meeting ID: 278 547 837 035 5 Passcode: oA7e6FJ2 **Dial in by phone** +1 224-419-4630,,690133685# United States, Waukegan Find a local number Phone conference ID: 690 133 685#

END OF DOCUMENT 00 25 00

AFFIDAVIT of COMPLIANCE

(Section 285.530.2, Revised Statutes of Missouri)

State of Missouri_____)
) ss:
County _____)

Now this _____ day of _____, 2025 the undersigned being first duly sworn, deposes and says:

1. I am more than 18 years of age.

2. I make this affidavit from my personal knowledge of the facts stated herein or upon information and facts available to me as a duly authorized owner, partner, corporate, or LLC officer or Human Relations Director of _____ ("Contractor").

3. I am authorized to make this affidavit on behalf of Contractor.

4. I state and affirm that Contractor is enrolled and is currently participating in E-Verify, a federal work authorization program or another equivalent electronic verification of work authorization program operated by the United States Department of Homeland Security under the Immigration Reform and Control Act of 1986.

5. Further, Contractor does not knowingly employ any person who is an unauthorized alien.

6. Further, Contractor has performed an electronic verification check as described above on all workers hired since January 1, 2009 or obtained documents required for completion of a Federal 1-9 form before it began participating in E-Verify.

7. Attached to this affidavit is a true and accurate copy of Contractor's Memorandum of Understanding with the United States concerning the use of E-Verify.

I certify under penalty of perjury that the statements above are complete, true and accurate to the best of my knowledge and belief.

_____
Authorized Agent, Partner, Owner or Officer

_____
Printed Name

_____
Title

If Contractor has a Human Relations Director or equivalent that person must sign as an affiant as well.

I certify under penalty of perjury that the statements above are complete, true and accurate to the best of my knowledge and belief.

_____
Human Relations Director

_____
Printed Name

_____
Title

Subscribed and sworn to before me this_____ day of _____,20_____.

_____
Notary Public

My commission expires:

_____

This form is promulgated pursuant to 15CSR 60-15.020. Use of this form is not required but the Attorney General has deemed this affidavit sufficient in form to satisfy the requirements of section 285.540 RSMo., Supp. 2008.

CITY OF GRAIN VALLEY, MISSOURI
711 MAIN STREET, GRAIN VALLEY, MO 64029
PHONE: (816) 847-6200 FAX: (816) 847-6209

WATER TOWER UPGRADE

BIDDER'S AFFIDAVIT

STATE OF _____)
) SS
COUNTY OF _____)

I _____(Name), representing_____(Name of Bidder), (hereinafter "the Bidder") upon oath depose and state that neither the Bidder nor anyone in Bidder's employment has employed any person to solicit or procure this Contract nor will any agent, representative, employee, servant, officer, director, manager or member of Bidder make any payment or agreement for payment of any compensation in connection with the procurement of this Contract.

I further depose and state that no part of the Contract Price was paid or will be paid to any person, corporation, firm, association, or other organization for soliciting the Contract, other than the payment of their normal compensation to persons regularly employed by the Bidder whose services in connection with the construction of the public building or project were in the regular course of their duties for the Bidder.

I further depose and state that the Bid is genuine and not collusive or sham; that said Bidder has not colluded, conspired, connived, or agreed, directly or indirectly, with any Bidder or person, to put in a sham bid or to refrain from bidding, and has not in any manner, directly or indirectly, sought by agreement, or collusion, or communication, or conference with any person to fix the bid price of Bidder or of any other Bidder, and that all statements in said Bid are true.

I further depose and state that Bidder has and will continue to comply with any Affirmative Action Plan and Disadvantaged Business Enterprise Plan of the City of Grain Valley, Missouri, as well as all Ordinances and directives of the City referring to the participation of Small, Disadvantaged, Women owned and Minority Businesses applicable to this Bid and the Contract to be awarded through this Bidding Process.

I further depose and state that the undersigned, the Bidder, and all, officers, directors, employees and agents of Bidder and all Subcontractors and Suppliers Bidder intends to use if awarded the Contract, are not currently debarred or suspended from bidding on contracts with any governmental entity or agency, nor are any such persons or companies proposed to be debarred or suspended from bidding on such contracts, nor have any such persons or companies been excluded from participating in the Contract to be awarded through this bid process by any federal, state or local governmental entity or agency.

I further depose and state that neither the Bidder, nor any person who is an agent, representative, employee, servant, officer, director, manager or member of the Bidder has offered, gave, or agreed to give any employee or former employee of the City, any gratuity, payment or gift in connection with any decision, approval, disapproval, or recommendation, influencing the content of any specification or procurement standard, rendering of advice, investigation, auditing, or in any other advisory capacity in any proceeding or application, request for filing, determination, claim or controversy, or other particular matter, pertaining to any program requirement or a contract or subcontract, or to any solicitation or proposal therefore.

I further depose and state that Bidder has not received any payment or gratuity from a Subcontractor or Supplier, as an inducement for the award of a subcontract or a purchase order.

The undersigned further warrants that he or she has the authority to execute this affidavit on behalf of the Bidder.

_____

Signature

Before me, a Notary Public, personally appeared to me known to be the person who executed the within Bidder's Affidavit, and acknowledged to me that he/she executed the same for the purposes therein stated.

_____

Notary Public

My commission expires:

_____

(This Affidavit must be executed)

STATE OF _____)
) SS
COUNTY OF _____)

_____

being first duly sworn, deposes and says that he is _____

(Sole Owner, a Partner, President, Secretary, etc.) of _____

_____ the party making the foregoing proposal or bid; that such bid is genuine and not collusive or sham; that said Bidder has not colluded, conspired, connived, or agreed, directly or indirectly with any Bidder or person, to put in a sham bid, or that such other person shall refrain from bidding, and has not in any manner, directly or indirectly sought by agreement or collusion or communication or conference, with any person, to fix the bid price of affiant or any other Bidder, or to fix any overhead, profit, or cost element of said Bid price, or of that of any other Bidder, or to secure any advantage against the Owner, or any person interested in the proposed Contract; and that all statements contained in said proposal or bid are true; and further, that such Bidder has not, directly or indirectly submitted this Bid, or the contents thereof, or divulged information or data relative thereto to any association or to any member or agent thereof.

_____
Affiant

Subscribed and sworn to before me this _____ day of_____, 20 _____.

_____
Notary Public

My Commission Expires: _____

END OF DOCUMENT 00 45 19

TABLE OF CONTENTS

Page

ARTICLE 1- Bid Recipient 2

ARTICLE 2 - Bidder's Acknowledgements 2

ARTICLE 3 - Bidder's Representations 2

ARTICLE 4- Bidder's Certification 3

ARTICLE 5 - Basis of Bid 4

ARTICLE 6 -Bid Alternates 5

ARTICLE 7 -Time of Completion 6

ARTICLE 8 -Attachments to this Bid 6

ARTICLE 9 - Bid Submittal 7

ARTICLE 1- BID RECIPIENT

1.01 This Bid is submitted to:

City of Grain Valley, Missouri

C/O Patrick Martin, City Representative
711 Main Street
Grain Valley, Missouri 64029

1.02 The undersigned Bidder proposes and agrees, if this Bid is accepted, to enter into an Agreement with Owner in the form included in the Bidding Documents to perform all Work as specified or indicated in the Bidding Documents for the prices and within the times indicated in this Bid and in accordance with the other terms and conditions of the Bidding Documents.

ARTICLE 2 - BIDDER'S ACKNOWLEDGEMENTS

2.01 Bidder accepts all of the terms and conditions of the Instructions to Bidders, including without limitation those dealing with the disposition of Bid security. This Bid will remain subject to acceptance for 90 days after the Bid opening, or for such longer period of time that Bidder may agree to in writing upon request of Owner.

ARTICLE 3 - BIDDER'S REPRESENTATIONS

3.01 In submitting this Bid, Bidder represents that:

A. Bidder has examined and carefully studied the Bidding Documents, and any data and reference items identified in the Bidding Documents, and hereby acknowledges receipt of the following Addenda:

Addendum No.	Addendum, Date
_____	_____
_____	_____
_____	_____
_____	_____

B. Bidder may request to visit the Site and adjacent areas, and become familiar with and satisfied itself as to the general, local, and Site conditions that may affect cost, progress, and performance of the Work.

C. Bidder is familiar with and has satisfied itself as to all Laws and Regulations that may affect cost, progress, and performance of the Work.

D. Bidder has carefully studied all: (1) reports of explorations and tests of subsurface conditions at or adjacent to the Site and all drawings of physical conditions relating to existing surface or subsurface structures at the Site that have been identified in the Supplementary Conditions, especially with respect to Technical Data in such reports and drawings, and (2) reports and drawings relating to Hazardous Environmental Conditions, if any, at or adjacent to the Site that have been identified in the Supplementary Conditions, especially with respect to Technical Data in such reports and drawings.

E. Bidder has considered the information known to Bidder itself; information commonly known to contractors doing business in the locality of the Site; information and observations obtained from visits to the Site; the Bidding Documents; and any Site-related reports and drawings identified in the Bidding Documents, with respect to the effect of such information, observations, and documents on (1) the cost, progress, and performance of the Work; (2) the means, methods, techniques, sequences, and procedures of construction to be employed by Bidder; and (3) Bidder's safety precautions and programs.

F. Bidder agrees, based on the information and observations referred to in the preceding paragraph, that no further examinations, investigations, explorations, tests, studies, or data are necessary for the determination of this Bid for performance of the Work at the price bid and within the times required, and in accordance with the other terms and conditions of the Bidding Documents.

G. Bidder is aware of the general nature of work to be performed by Owner and others at the Site that relates to the Work as indicated in the Bidding Documents.

H. Bidder has given Engineer written notice of all conflicts, errors, ambiguities, or discrepancies that Bidder has discovered in the Bidding Documents and confirms that the written resolution thereof by Engineer is acceptable to Bidder.

I. The Bidding Documents are generally sufficient to indicate and convey understanding of all terms and conditions for the performance and furnishing of the Work.

J. The submission of this Bid constitutes an incontrovertible representation by Bidder that Bidder has complied with every requirement of this Article, and that without exception the Bid and all prices in the Bid are premised upon performing and furnishing the Work required by the Bidding Documents.

ARTICLE 4 - BIDDER'S CERTIFICATION

4.01 Bidder certifies that:

A. This Bid is genuine and not made in the interest of or on behalf of any undisclosed individual or entity and is not submitted in conformity with any collusive agreement or rules of any group, association, organization, or corporation;

B. Bidder has not directly or indirectly induced or solicited any other Bidder to submit a false or sham Bid;

C. Bidder has not solicited or induced any individual or entity to refrain from bidding; and

D. Bidder has not engaged in corrupt, fraudulent, collusive, or coercive practices in competing for the Contract. For the purposes of this Paragraph 4.01.D:

1. "corrupt practice" means the offering, giving, receiving, or soliciting of anything of value likely to influence the action of a public official in the bidding process;

2. "fraudulent practice" means an intentional misrepresentation of facts made (a) to influence the bidding process to the detriment of Owner, (b) to establish bid prices at artificial non-competitive levels, or (c) to deprive Owner of the benefits of free and open competition;

3. "collusive practice" means a scheme or arrangement between two or more Bidders, with or without the knowledge of Owner, a purpose of which is to establish bid prices at artificial, non-competitive levels; and

4. "coercive practice" means harming or threatening to harm, directly or indirectly, persons or their property to influence their participation in the bidding process or affect the e execution of the Contract.

ARTICLE 5 - BASIS OF BID

6.01 BASE BID ITEMS (REQUIRED FOR BIDDING).

a. Completion of the following is required. Failure to complete all blanks may result in rejection of proposal. In the event that a bid is not furnished, enter “No Bid”.

b. Show the Total Amount of Base Bid.

c. Show the total number of calendar days from Notice to Proceed to Base Bid Substantial Completion. Final Completion shall be completed within 15 calendar days from the Substantial Completion date.

d. Bidder will complete the Work in accordance with the Contract Documents for the following price(s):

WATER TOWER UPGRADE

Item No.	Description*	Units	Quantity	Unit Price	Total Price ($)
1	New 1.0 MG Composite Elevated Storage Tank	1	LS		
2	Yard Piping	1	LS		
3	Electrical	1	LS		
4	Painting	1	LS		
5	Restoration	1	LS		
Total Amount of Base Bid					

*Refer to Section 01 22 00 for description of Unit Price Items

Total Amount of Base Bid for Project (Typed or Written)

Total number of calendar days from Notice to Proceed to Base Bid Substantial Completion

Firm Name

ARTICLE 6 – BID ALTERNATES

6.02 BID ALTERNATE ITEMS (REQUIRED FOR BIDDING).

a. Completion of the following is required. Failure to complete all blanks may result in rejection of proposal. In the event that a bid is not furnished, enter "No Bid".
b. The Owner has the option of accepting, or not accepting the Bid Alternate without impacting the cost of any other item of work.
c. The Bid Alternate work is outlined in Section 01 22 00 – Unit Prices and Appendix D – Bid Alternate No. 1.
d. Show the Total Amount of Bid Alternate No. 1.
e. Show the Total Amount of the Base Bid and Bid Alternate No. 1.
f. Show the total number of additional calendar days to complete Bid Alternate No. 1.

Item No.	Description*	Units	Quantity	Unit Price	Total Price ($)
6	Bid Alternate No. 1: Tri-County Water Authority Proposed Emergency Connection	1	LS		
Total Amount of Bid Alternates					

*Refer to Section 01 22 00 for description of Unit Price Items

Total Amount of Bid Alternate No. 1 for Project (Typed or Written)

Total number of additional calendar days to complete Bid Alternate No. 1

Total Amount of Base Bid and Bid Alternate No. 1 for Project (Typed or Written)

Firm Name

ARTICLE 7 -TIME OF COMPLETION

7.01 **Bidder** agrees that the Work will be substantially complete within the number of calendar days listed in the Bid Form and will be completed and ready for final payment in accordance with Paragraph 14.10 of the General Conditions within 15 days of final punch list.

7.02 Bidder accepts the provisions of the Agreement as to liquidated damages.

ARTICLE 8 - ATTACHMENTS TO THIS BID

8.01 The following documents are to be submitted with and made a condition of this Bid:

A. Bid Form;

B. Required Bid Security;

C. Bidders Affidavit;

D. E-Verify Affidavit;

E. List of Proposed Subcontractors;

F. List of Proposed Suppliers;

G. List of Equipment;

H. List of Contracts on Hand;

I. Experience List - See Section 13 21 10 – Composite Elevated Water Storage Tank for details;

J. Tank Drawing - See Section 13 21 10 – Composite Elevated Water Storage Tank for details;

K. Foundation Drawing - See Section 13 21 10 – Composite Elevated Water Storage Tank for details;

L. Evidence of authority to do business in the state of Missouri; or a written covenant to obtain such license within the time for acceptance of Bids;

M. Contractor's License No.: **[or]** Evidence of Bidder's ability to obtain a State Contractor's License and a covenant by Bidder to obtain said license within the time for acceptance of Bids;

N. Product Substitution Form 00 43 25.

O. 00 45 19 - Non-Collusion Affidavit.

P. All manufactured goods or commodities used or supplied under this contract must meet the requirements of the Domestic Products Procurement law RSMo 34.350 - RSMo 34.359. Compliance certification must be submitted if awarded project.

8.02 The terms used in this Bid with initial capital letters have the meanings stated in the Instructions to Bidders, the General Conditions, and the Supplementary Conditions.

ARTICLE 9 - BID SUBMITTAL

BIDDER: *[Indicate correct name of bidding entity]*

By:
[Signature] _____

[Printed name]
{If Bidder is a corporation, a limited liability company, a partnership, or a joint venture, attach evidence of authority to sign.)

Attest:
[Signature] _____

[Printed name] _____

Title: _____

Submittal Date: _____

Address for giving notices:

_____

_____

_____

Telephone Number: _____

Fax Number: _____

Contact Name and e-mail address: _____

_____

Bidder's License No.: _____
(where applicable)

EQUIPMENT QUESTIONNAIRE

The undersigned hereby represents that he proposes to perform the work in the following manner and with the following equipment:

a. The work, if awarded, will have the personal supervision of whom?

_____

b. List below the equipment that will be used or is available for use on this contract.

QUANTITY ITEM	DESCRIPTION, SIZE, CAPACITY, ETC.	CONDITION	YEARS OF SERVICE	PRESENT LOCATION

Attach additional sheets if required.

LIST OF CONTRACTS ON HAND

LOCATION	TYPE OF WORK/CONTRACTING AGENCY	CONTRACT PRICE	DATE	% COMPLETE

Attach additional sheets if required.

BID BOND

Any singular reference to Bidder, Surety, Owner or other party shall be considered plural where applicable.

BIDDER (Name and Address):

SURETY (Name and Address of Principal Place of Business):

OWNER (Name and Address):
City of Grain Valley, Missouri
711 Main Street
Grain Valley, MO 64029

PROJECT
Date:
Amount:
Description (Name and Location):

Water Tower Upgrade
1201 Tyer Road, Grain Valley Missouri

BOND
Date:
Amount:

Surety and Bidder, intending to be legally bound hereby, subject to the terms printed on the reverse side hereof, do each cause this Payment Bond to be duly executed on its behalf by its authorized officer, agent or representative.

BIDDER AS PRINCIPAL
Company: **(Corp. Seal)**

Signature:_____
Name and Title:_____

SURETY
Company: **(Corp. Seal)**

Signature:_____
Name and Title:_____
(Attach certified Power of Attorney)

NOW THEREFORE, Bidder and Surety jointly and severally agree to bind themselves, their heirs, executors, administrators, successors and assigns to pay to Owner upon default of Bidder the penal sum set forth on the face of the Bond and subject to the following terms and conditions:

1. Default of Bidder shall occur upon the failure of Bidder to deliver within the time required by the Bidding Documents the executed Agreement required by the Bidding Documents and the performance and payment bonds required by the Bidding Documents and Contract Documents.

2. This obligation shall be null and void if:

   a. Owner accepts Bidder's bid and Bidder delivers within the time required by the Bidding Documents (or any extension thereof agreed to in writing by Owner) the executed Agreement required by the Bidding Documents and the performance and payment bonds required by the Bidding Documents and Contract Documents, or

   b. All bids are rejected by Owner, or

   c. Owner fails to issue a notice of award to Bidder within the time specified in the Bidding Documents (or any extension thereof agreed to in writing by Bidder.

3. Payment under this Bond will be due and payable upon default of Bidder and within ten (10) calendar days after receipt by Bidder and Surety of written notice of default from Owner.

4. Notice required hereunder shall be in writing and sent via U.S. Mail or hand delivered to both Bidder and Surety at their respective addresses shown on the face of this Bond and shall be deemed to be effective upon receipt by the party concerned.

5. Surety waives notice of and any and all defenses based on or arising out of any time extension to issue notice of award agreed to in writing by Owner and Bidder.

6. Surety shall cause to be attached to this Bond a current and effective Power of Attorney evidencing the authority of the officer, agent or representative who executed this Bond on behalf of Surety to execute, seal and deliver such Bond and bind the Surety thereby.

7. This Bond is intended to conform to all applicable laws. Any applicable requirement of any applicable law that has been omitted from this Bond shall be deemed to be included herein as if set forth at length. If any provision of the Bond conflicts with any applicable provision of any applicable law, then the provisions of said laws shall govern and the remainder of this Bond that is not in conflict therewith shall continue in full force and effect.

Address of Owner:	Address of Bidder:	Address of Surety:
City of Grain Valley, Missouri 711 Main Street Grain Valley, MO 64029	[Insert Name and Address]	[Insert Name and Address]

BIDDING REQUIREMENTS
Document 00 43 25 - Proposed Product Substitutions

1.01 The Total Base Bid Amount includes only those products specified in the Bidding Documents. Following is a list of substitute products which Bidder proposes to furnish on this project, with the difference in price being added to or deducted from the Total Bid Amount.

1.02 Bidder understands that the acceptance of any proposed substitution is at the Owner's option. Approval or rejection of any substitutions listed below will be indicated after executing the Contract.

1.03 PRODUCT SUBSTITUTION LIST

MANUFACTURER'S NAME AND PRODUCT	ADD	DEDUCT

1.04 Bidder's proposal shall be in accordance with the provisions of Section 01 60 00 - Product Requirements.

1.05 EVALUATION

A. Contract award will be made in accordance with Instructions to Bidders. Only the successful Bidder's Proposed Product Substitution List will be evaluated.

1.06 SIGNATURE OF BIDDER

_____
Individual or Corporate Name

By _____

Address _____

_____

END OF DOCUMENT 00 43 25

1.01 The following information gives the name, business address, and portion of work (description of work to be done) for each subcontractor, subconsultant, structural engineer, and engineer of record that will be used in the work if the Bidder is awarded the Contract. List all subcontractors, subconsultants and engineers regardless of dollar value of work. The listed subcontractors shall be used. Completion of the following is required. Failure to complete this form may result in an unresponsive bid.

A. Type of Work: _____

Dollar Value of Work: _____

Name: _____

Address: _____
Street City

B. Type of Work: _____

Dollar Value of Work: _____

Name: _____

Address: _____
Street City

C. Type of Work: _____

Dollar Value of Work: _____

Name: _____

Address: _____
Street City

D. Type of Work: _____

Dollar Value of Work: _____

Name: _____

Address: _____
Street City

E. Type of Work: _____

Dollar Value of Work: _____

Name: _____

Address: _____
Street City

F. Type of Work: _____

Dollar Value of Work: _____

Name: _____

Address: _____
Street City

G. Type of Work: _____

Dollar Value of Work: _____

Name: _____

Address: _____
Street City

1.02 SIGNATURE OF BIDDER

_____
Individual or Corporate Name

By _____
(Signature of Authorized Individual)

_____
(Name of Authorized Individual)

Address _____

_____

END OF DOCUMENT 00 43 36

BID GUARANTY

Attached hereto is a _____Certified Check from _____ (the " Bidder") in the amount of _____Dollars ($_____), which represents no less than five percent (5%) of the total Bid and payable to the City of Grain Valley, Missouri.

The Undersigned Bidder agrees that the accompanying Bid Security shall be forfeited to and become the property of the Owner should Bidder fail or refuse within the time required by the Bidding Documents to fully execute the Agreement as required by the Bidding Documents and timely delivery of a fully executed Performance Bond and Payment Bond required by the Bidding Documents and Contract Documents.

Dated this _____ day of _____, 20___

_____
Name of Bidder (typed)

By:_____
(Authorized Signature)

Printed Name:_____

Title:_____

Address:_____
_____
_____

ATTEST:

_____
Secretary (If Corporation)

Affix Corporate Seal

CITY OF GRAIN VALLEY

WATER TOWER UPGRADE

TABLE OF CONTENTS

SECTION NUMBER	SECTION TITLE	PAGE NUMBER	
CONTRACTING REQUIREMENTS			
295890v1	Notice of Award	NA	1
	Agreement (Unit Price)	AUP	1-5
	Notice to Proceed	NTP	1
293135v1	Performance Bond	PEB	1-2
293137v1	Payment Bond	PAB	1-2
	Maintenance Bond	MB	1-2
00 62 11	Submittal Transmittal	00 62 11	1-2
00 62 76	Contractors Application for Payment	00 62 76	1-3
	Contractor's Affidavit and Release for Partial Payment	APP	1
00 63 13	Request for Interpretation	00 63 13	1-2
00 63 33	Substitution Request	00 63 33	1-2
293146v1	Certificate of Substantial Completion	CSP	1
00 65 19.13	Contractor's Affidavit of Payment of Debts and Claims	00 65 19.13	1
00 65 19.16	Contractor's Affidavit of Release of Liens	00 65 19.16	1
293150v1	Receipt and Release Final	RR	1
293149v1	Consent of Surety Company to Final Payment	CS	1
00 70 00	General Conditions Table of Contents - 295893v1	GC	i-iii
00 70 00	General Conditions - 295893v1	GC	1-45
00 80 00	Supplementary Conditions	00 80 00	1-8
00 81 00	Definitions and Format Explanation	00 81 00	1-4
	Missouri Project Exemption Certificate	MOPEC	1
	Missouri Division of Labor Standards Wage Order 31	AWO	1-4
	Missouri Statement of Compliance	MO-SC	1
	Missouri Affidavit of Compliance with Prevailing Wage Law	PW	1
00 94 00	Work Change Directive	00 94 00	1
00 94 10	Change Order	00 94 10	1
00 94 20	Field Order	00 94 20	1

NOTICE OF AWARD

_____20__

TO:

_____

AT: _____

_____

"Contractor"

FROM:
CITY OF GRAIN VALLEY, MISSOURI
711 Main Street
Grain Valley, MO 64029
"Owner"

RE: **WATER TOWER UPGRADE**

_____

_____

"Project"

You are notified that your Bid dated _____for the referenced Contract has been evaluated. Your organization has been determined to be the lowest responsible and best Bidder, and has been awarded the Contract for the Work.

The Contract Price of your Contract is _____
Dollars ($_____).

Five (5) copies of the Agreement Between Owner and Contractor accompany this Notice of Award.

Your organization shall comply with the following conditions precedent within the number of days after receipt of the Notice of Award specified in the Instruction to Bidders or otherwise stipulated, that is by _____, 20__ you shall:

Sign and return to the **Professional** the executed Notice of Award and all of the following required documents:

1. Five (5) fully executed counterparts of the Agreement Between Owner and Contractor
2. Fully executed Performance and Maintenance Bond and Payment Bond as specified in the General Conditions which may be modified by Supplementary Conditions.
3. Certificate of Insurance as specified the General Conditions which may be modified by Supplementary Conditions.

Failure to comply with these conditions within the time specified may entitle the Owner to consider your Bid abandoned, annul this Notice of Award and declare your Bid Security forfeited.

Issued On Behalf Of The Owner:

By:_____

Printed Name:_____

Title:_____

Contractor

_____

By:_____

Printed Name:_____

Title:_____

Received on _____, 20____

Return to the Professional: _____

_____

_____

WATER TOWER UPGRADE

AGREEMENT BETWEEN OWNER AND CONTRACTOR (UNIT PRICE)

THIS AGREEMENT BETWEEN OWNER AND CONTRACTOR (this "Agreement") is made and Entered into and is effective on this_____day of _____, 20___, by and between the City of Grain Valley, Missouri, a municipality, ("Owner"), and _____, a _____, having its principal place of business located at _____ ("Contractor")

WHEREAS, Owner has caused to be prepared specifications, plans and other Contract Documents for the Work herein described, and has approved and adopted the Contract Documents defined herein and has invited proposals for furnishing materials, labor, and equipment for, and in connection with, the construction of improvements in accordance with the terms of the Contract Documents; and

WHEREAS, Owner held a Pre-Bid conference on _____, and

WHEREAS, the Contractor, in response to the Owners invitation to bid which closed at _____ on _____, 20____, has submitted to Owner in the manner and at the time specified, a proposal in accordance with the terms of the Contract Documents; and

WHEREAS, Owner has opened, and examined the bids submitted and as a result of such examination, has determined and declared the Contractor to be the lowest and best bidder for constructing said improvements, and has duly awarded to this Contract to Contractor.

Owner and Contractor, in consideration of the mutual covenants herein set forth, agree as follows:

ARTICLE 1
WORK

Contractor, at his own cost and expense, will provide all labor, tools, equipment and materials required to complete all Work specified or indicated in the Contract Documents or reasonably inferable by the Contractor therefrom as necessary to produce the results intended by the Contract Documents.

ARTICLE2
PROFESSIONAL

The Project has been designed by the City of Grain Valley, who is referred to in the Contract Documents as the Professional. Professional, and its duly authorized agents, are to act as Owner's representative, assume all duties and responsibilities, and have the rights and authorities assigned to Professional in the Contract Documents in accordance with the Contract Documents.

ARTICLE 3
CONTRACT TIME AND COMPLETION

3.1 The date of commencement is the date from which the Contract Time(s) of Paragraph 3.3 is measured and shall be fixed in a written notice to proceed issued by Owner.

3.2 The Contractor shall achieve Substantial and Final Completion of the entire Work, and if set forth below, the various designated stages of the Work, not later than the following dates:

Substantial Completion shall be completed within ____ calendar days from the Notice to Proceed date. (The calendar days in this agreement will be based on the total number of calendar days submitted on the Bid Form. The calendar days will be inserted into the final agreement.) The following items shall be complete for the project to be considered for Substantial Completion: Tank Construction, Electrical,

Painting, Yard Pipe Installation, Testing and Disinfection, SCADA Integration, Pavement and Curb Restoration.

Final Completion shall be completed within 15 calendar days from the Substantial Completion date. The following item shall be complete for the project to be considered for Final Completion: Seeding and Sodding.

3.3 Bidder agrees that the Work will be substantially complete within ___ calendar days of Notice to Proceed and will be fully completed and ready for final payment in accordance with Paragraph 14.10 of the General Conditions within fifteen (15) calendar days following receipt of notice of substantial completion. (The calendar days in this agreement will be based on the total number of calendar days submitted on the Bid Form. The calendar days will be inserted into the final agreement.)

3.4 Time is of the essence to the Contract Documents and all obligations thereunder. The Contractor acknowledges and recognizes that (1) Owner is entitled to full and beneficial occupancy and use of the completed Work following expiration of the Contract Times and (2) Owner will sustain damages if the Contract Time(s) are not met by Contractor. The Contractor further acknowledges and agrees that if the Contractor fails to achieve Substantial Completion of the entire Work or any phase of the Work within the Contract Time(s), Owner will sustain extensive damages and serious loss as a result of such failure. The exact amount of such damages will be extremely difficult to ascertain. Therefore, Owner and the Contractor agree as follows in this Paragraph 3.4:

1. If the Contractor fails to achieve Substantial Completion of the Work or designated portions within the Contract Time(s) as set forth in Paragraph 3.2, Owner shall be entitled to retain or recover from the Contractor, as liquidated damages and not as a penalty, the following per diem amounts for each day that expires after the time specified in Paragraph 3.3 for Substantial Completion of the Work or designated phases of the Work and continuing until the actual Date(s) of Substantial Completion:

   $2000 per Calendar Day

2. After Substantial Completion, if Contractor shall neglect, refuse or fail to complete remaining Work or designated portions within the Contract Time(s), as set forth in Paragraph 3.3, Owner shall be entitled to retain or recover from Contractor as liquidated damages and not as a penalty, the following per diem amounts for each day that expires after the time specified in Paragraph 3.2 for final completion of the Work or phases of the Work and until the actual date(s) of final completion:

   $2000 per Calendar Day

3. All such liquidated damages referred to in this Paragraph 3.4 are hereby agreed to be a reasonable pre-estimate of damages Owner will incur as a result of delayed completion of the Work or phases of the Work. Owner may deduct liquidated damages described in Paragraph 3.4 from any unpaid amounts then or thereafter due the Contractor under this Agreement. Any liquidated damages not so deducted from any unpaid amounts due the Contractor shall be payable to Owner at the demand of Owner, together with interest from the date of the demand at a rate of one and one-half percent (1.5%) per month.

ARTICLE 4
CONTRACT SUM

4.1 Owner shall pay Contractor for completion of the Work in accordance with the Contract Documents an amount equal to the sum of the below established unit price of each separately identified item of Work set forth below, times the actual quantities of that item completed by Contractor ("Contract Price"):

SEE ATTACHED BID

4.2 The unit prices set forth above are considered complete and include: (1) all materials, equipment, labor, delivery, installation, overhead and profit; and (2) any other costs or expenses in connection with, or incidental to, the performance of that portion of the Work to which such unit prices apply.

4.3 Owner will determine the actual quantities and classifications of Unit Price Work performed by Contractor. Owner will review with Contractor's representative preliminary determinations on such matters before rendering a written decision thereon (by recommendation of an Application for Payment or otherwise). Owner's written decisions thereon will be final and binding upon Contractor, unless, within ten (10) days after the date of any such decision, Contractor delivers to Owner a written objection to such determination.

4.4 Any estimated quantities of Work contained in any Contract Document are not guaranteed and are solely for the purpose of comparison of Bids. Contractor acknowledges and agrees that the estimated quantities may change because of changes ordered by Owner or because of actual site conditions or other reasons. Contractor agrees that the unit prices for the Work shall remain unchanged even if the actual quantity of Work performed by Contractor differs materially and significantly from any estimated quantity of such items. Contractor agrees that it shall make no claim for an adjustment in any unit price for any variance between the actual quantity of Work performed by Contractor and any estimated quantity of such item.

ARTICLE 5
PAYMENTS

5.1 Contractor shall submit Applications for Payment in accordance with the General Conditions of the Contract for Construction and in the form provided by Owner. Owner shall make progress payments to Contractor in accordance with the Contract Documents. The period covered by each Application for Payment shall be one (1) calendar month ending on the last day of the previous month.

5.2 The Application for Payment submitted by Contractor shall include the quantities of each item of Work completed by Contractor. Subject to the provisions of the Contract Documents, the amount of each progress payment shall be computed as follows:

1. The value of all completed Work by Contractor as determined by the sum of the unit price of each separately identified item of Work set forth in Paragraph 4.1 times the actual quantities of that item completed as determined by Owner as set forth in Paragraph 4.3;
2. Less retainage of five percent (5%) of the amount of Subparagraph 1;
3. Less the aggregate of previous payments made by Owner; and
4. Less amounts, if any, for which the Owner has withheld or nullified an approval of payment as set forth in the Contract Documents.

Owner shall make progress payments and final payment in accordance with the General Conditions of the Contract for Construction.

ARTICLE 6
CONTRACTOR'S REPRESENTATIONS

In order to induce Owner to enter into this Agreement, Contractor makes the following representations:

6.1 Contractor has examined and carefully studied the Contract Documents (including the Addenda listed in Article 7) and the other related data identified in the Bidding Documents including "technical data."

6.2 Contractor has visited the site and become familiar with and satisfied itself as to the general, local, and site conditions that may affect cost, progress, performance, or furnishing of the Work.

6.3 Contractor is familiar with and has satisfied itself as to all federal, state and local Laws and Regulations that may affect cost, progress, performance and furnishing of the Work.

6.4 Contractor has been provided any and all reports of explorations and tests of subsurface conditions

at or contiguous to the site and all drawings of physical conditions in or relating to existing surface or subsurface structures at or contiguous to the site. Contractor acknowledges that such reports and drawings are not Contract Documents. A list of such reports and drawings are attached hereto as Exhibit A. Contractor acknowledges that Owner and Professional do not assume responsibility for the accuracy or completeness of such information. Contractor also acknowledges that Owner and Professional do not assume responsibility for the accuracy or completeness of data shown or indicated in the Contract Documents with respect to underground facilities or utilities at or contiguous to the site, and Contractor shall not be entitled to rely on the accuracy or completeness of such data. Contractor has obtained and carefully studied (or assumes responsibility for having done so) all such additional supplementary examinations, investigations, explorations, tests, studies, and data concerning conditions (surface, subsurface, and underground facilities and utilities) at or contiguous to the site or otherwise which may affect cost, progress, performance, or furnishing of the Work or which relate to any aspect of the means, methods, techniques, sequences, and procedures of construction to be employed by Contractor and safety precautions and programs incident thereto. Contractor does not consider that any additional examinations, investigations, explorations, tests, studies, or data are necessary for the performance and furnishing of the Work at the Contract Sum, within the Contract Times, and in accordance with the other terms and conditions of the Contract Documents.

6.5 Contractor is aware of the general nature of work to be performed by Owner and others at the site that relates to the Work as indicated in the Contract Documents.

6.6 Contractor has correlated the information known to Contractor, information and observations obtained from visits to the site, reports and drawings identified in the Contract Documents, and all additional examinations, investigations, explorations, tests, studies, and data with the Contract Documents.

6.7 Contractor has given Owner written notice of all conflicts, errors, ambiguities, or discrepancies that Contractor has discovered in the Contract Documents and the written resolution thereof by Owner is acceptable to Contractor, and the Contract Documents are generally sufficient to indicate and convey understanding of all terms and conditions for performance and furnishing of the Work.

6.8 Contractor has the full power and authority to make, execute, deliver and perform the Work hereunder and has authorized the undersigned to bind it to this Contract and the Contract Documents.

6.9 The representations of Contractor shall be continuing and shall survive the execution and termination of this Contract.

ARTICLE 7
CONTRACT DOCUMENTS

The Contract Documents, except for Modifications executed after the date of this Contract, which comprise the entire agreement between Owner and Contractor concerning the Work, consist of the following:

7.1 This Agreement.

7.2 Exhibits to this Agreement, if any.

7.3 Notice to Proceed.

7.4 General Conditions of the Contract for Construction.

7.5 Supplementary Conditions of the Contract.

7.6 Performance Bond.

7.7 Payment Bond.

7.8 Maintenance Bond

7.9 Specifications of the Contract

7.10 The Drawings, as follows: “Map of Proposed Roads” and standard details.

7.11 Addenda, if any, as follows:

Number	Date	Pages

7.12 Other documents, if any, as follows:

There are no Contract Documents other than those listed above in this Article 7 or the General Conditions of the Contract for Construction.

ARTICLE 8
MISCELLANEOUS

8.1 Terms used in this Contract which are defined in Article 1 of the General Conditions of the Contract for Construction will have the meanings indicated in the General Conditions of the Contract for Construction.

8.2 Owner and Contractor each binds itself, its partners, successors, assigns, and legal representatives to the other party hereto, its partners, successors, assigns, and legal representatives in respect to all covenants, agreements, and obligations contained in the Contract Documents.

8.3 The business address of Contractor given herein is the place to which all notices, letters, and other communication to Contractor will be mailed or delivered. The address of Owner appearing herein is hereby designated as the place to which all notices, letters, and other communication to Owner shall be mailed or delivered. Either party may change his address at any time by an instrument in writing delivered to Professional and to the other party.

IN WITNESS WHEREOF, Owner and Contractor *have* signed this Contract by and through their duly authorized representatives. All portions of the Contract Documents *have* been signed or identified by Owner and Contractor or by Professional on their behalf.

THE CONTRACT DOCUMENTS CONTAIN AN ARBITRATION PROVISION WHICH MAY BE ENFORCED BY THE PARTIES

ATTEST:

_____
City
Clerk

CITY OF GRAIN VALLEY, MISSOURI
"Owner"

By:_____

Printed Name:. Kenneth Murphy

Title: City Administrator

_____
"Contractor"

By:_____

Printed Name:_____

Title:_____

EJCDC
ENGINEERS JOINT CONTRACT DOCUMENTS COMMITTEE

NOTICE TO PROCEED

Owner:	City of Grain Valley, MO	Owner's Contract No.:	
Contractor:		Contractor's Project No.:	
Project:	Water Tower Upgrade	Contract Name:	
		Effective Date of Contract:	

TO CONTRACTOR:

Owner hereby notifies Contractor that the Contract Times under the above Contract will commence to run on [_____, 20__].

On that date, Contractor shall start performing its obligations under the Contract Documents. No Work shall be done at the Site prior to such date. In accordance with the Agreement, the date of Substantial Completion is _____, and the date of readiness for final payment is_____.

Before starting any Work at the Site, Contractor must comply with the following:
[Note any access limitations, security procedures, or other restrictions]

Owner:	City of Grain Valley, Missouri
By:	Authorized Signature Kenneth Murphy
Title:	City Administrator
Date Issued:	

Copy: Engineer

PERFORMANCE BOND

Any singular reference to Contractor, Surety, Owner or other party shall be considered plural where applicable.

CONTRACTOR (Name and Address):

SURETY (Name and Address of Principal Place of Business):

OWNER:
City of Grain Valley, Missouri
711 Main Street
Grain Valley, MO 64029

CONTRACT
Date:
Price:
Description (Name and Location):

BOND
Date:
Amount:

Surety and Contractor, intending to be legally bound hereby, subject to the terms printed on the reverse side hereof, do each cause this Performance Bond to be duly executed on its behalf by its authorized officer, agent or representative.

CONTRACTOR AS PRINCIPAL
Company: (Corp. Seal)

Signature:_____
Name and Title:

SURETY
Company: (Corp. Seal)

Signature:_____
Name and Title:
(Attach certified Power of Attorney)

1. Contractor and the Surety, jointly and severally, bind themselves, their heirs, executors, administrators, successors and assigns to Owner and any successor, grantee or assignee of Owner for the full performance of all of Contractor's obligations under the Contract. The Contract is incorporated herein by this reference.

2. If the Contractor fully performs all of its duties and obligations under the Contract, the Surety and the Contractor shall have no obligation under this Bond.

3. The Surety's obligations under this Bond shall arise after:

   a. The Contractor fails to fully perform of all its duties and obligations under the Contract;

   b. The Owner has given Surety notice of Contractor's failure to fully perform of all its duties and obligations under the Contract; and

   c. The Owner has agreed to pay the Balance of the Contract Price, if any, to the Surety in accordance with the terms of the Contract.

4. When Owner has satisfied the conditions of Paragraph 3, the Surety shall promptly and at Surety's expense take one of the following actions:

   a. Arrange for Contractor, with the written consent of the Owner, to perform, complete or cure the default or breach of the Contract; or

   b. Undertake to perform and complete the Contract itself through qualified contractors approved by Owner;

   c. Waive its right to perform, complete or cure the default of breach of the Contract and pay to the Owner the total amount of this Bond.

5. If the Surety does not proceed as provided by Paragraph 4 within fifteen (15) days of the Owner's compliance with Paragraph 3 and complete its obligations with diligence and promptness, Surety shall be deemed to be in default under this Bond.

6. If Surety elects to act under Paragraph 4(a) or 4(b) above, then the responsibilities of Surety to Owner shall not be greater than those of the Contractor under the Contract, and the responsibilities of Owner to Surety shall not be greater than those of the Owner under the Contract. Surety recognizes and acknowledges that subject to the amount of the Bond, Surety's obligations under this Bond, include but are not limited to:

   a. The responsibilities of Contractor for correction of defective work and completion of the Contract;

   b. Attorneys' fees and design professional fees and delay costs resulting from Contractor's breach of or default under the Contract, or resulting from the acts or omissions of the Surety;

   c. Liquidated damages, or if no liquidated damages are specified in the Contract, actual damages caused by the delayed performance or non-performance of the Contractor under the Contract or the Surety under this Bond.

7. The Surety shall not be liable to the Owner or others for obligations of the Contractor that are unrelated to the Contract, and the Balance of the Contract Price shall not be reduced or set off on account of any such unrelated obligations. No right of action shall accrue on this Bond to any person or entity other than the Owner.

8. The Surety hereby waives notice of any change, including changes of times, to the Contract or to related subcontracts, purchase orders and other obligations.

9. It is agreed by Contractor and Surety that notwithstanding any contrary provisions contained in this Bond or the Contract, that there shall be no limits on the Owner's right to sue under this Bond for defects, defaults, or breaches not discovered or known by Owner at the time such Work was paid for and accepted by Owner except those limits provided by the statute of limitations applicable to suits on contracts.

10. Surety further agrees that in event of any default by the Owner in the performance of the Owner's obligations to the Contractor under the Contract, the Contractor or Surety shall cause written notice of such default specifying said default in detail to be given to the Owner, and the Owner shall have thirty (30) days from time after receipt of such notice within which to cure such default, or such additional reasonable period of time as may be required if the nature of such default is such that it cannot be cured within thirty (30) days. Such Notice of Default shall be sent by certified or registered U.S. Mail, return receipt requested, first class postage pre-paid, to the Owner.

11. Surety further agrees this Bond shall remain in effect following the date of Final Payment during the Guarantee Period or the time required to resolve any items of incomplete Work and the payment of any disputed amounts for the period provided in the statute of limitations applicable to suits on contracts. This Bond shall be in an amount equal to the Contract Price and any adjustments thereto.

12. Surety agrees that it is obligated under the bonds to any successor, grantee or assignee of Owner.

13. Definitions

   a. Balance of the Contract Price: The total amount payable by the Owner to the Contractor under the Contract after all proper adjustments have been made, including allowance to the Contractor of any amounts received or to be received by the Owner in settlement of insurance or other claims for damages to which the Contractor is entitled, reduced by all valid and proper payments made to or on behalf of the Contractor under the Contract.

   b. Contract: The agreement between the Owner and the Contractor identified on the signature page, including all Contract Documents and changes thereto and including, but not limited to, all duties to correct or repair non-conforming Work.

Address of Owner:	Address of Contractor/Principal:	Address of Surety:
City of Grain Valley, Missouri 711 Main Street Grain Valley, MO 64029	[Insert Name and Address]	[Insert Name and Address]

PAYMENT BOND

Any singular reference to Contractor, Surety, Owner or other party shall be considered plural where applicable.

CONTRACTOR (Name and Address):

SURETY (Name and Address of Principal Place of Business):

OWNER (Name and Address):
City of Grain Valley, Missouri
711 Main
Grain Valley, MO 64029

CONTRACT
Date:
Amount:
Description (Name and Location):

BOND
Date:
Amount:

Surety and Contractor, intending to be legally bound hereby, subject to the terms printed on the reverse side hereof, do each cause this Payment Bond to be duly executed on its behalf by its authorized officer, agent or representative.

CONTRACTOR AS PRINCIPAL
Company: **(Corp. Seal)**

Signature:_____
Name and Title:

SURETY
Company: **(Corp. Seal)**

Signature:_____
Name and Title:
(Attach certified Power of Attorney)

293137v1

FORM 2-20-03

1. The Contractor and the Surety, jointly and severally, bind themselves, their heirs, executors, administrators, successors and assigns to the Owner and any successor, grantee or assignee of Owner to pay for labor, materials and equipment furnished by Claimants for use in the performance of the Contract, which is incorporated herein by reference.

2. With respect to the Owner this obligation shall be null and void if the Contractor promptly makes payment, directly or indirectly, for all sums due Claimants.

3. With respect to Claimants, this obligation shall be null and void if the Contractor promptly makes payment for all sums due Claimants.

4. The Surety's total obligation shall not exceed the amount of this Bond.

5. Amounts due and payable by the Owner to the Contractor under the Contract shall be used for the performance of the Contract and to satisfy claims, if any, under the Performance Bond provided in connection with the Contract. By the Contractor furnishing this Bond, Contractor agrees that all remaining funds due and payable by the Owner to the Contractor in the performance of the Contract are dedicated to satisfy obligations of the Contractor and the Surety under this Bond subject to the Owner's priority to use the funds for the completion of the Work.

6. The Surety shall not be liable to the Owner, Claimants or others for obligations of the Contractor that are unrelated to the Contract. The Owner shall not be liable for payment of any costs or expenses of any Claimants under this Bond, and shall have under this Bond no obligation to make payments to, give notices on behalf of, or otherwise have obligations to Claimants under this Bond.

7. The Surety hereby waives notice of and consents to any changes, including changes of time, to the Contract or to related subcontracts, purchase orders and other obligations.

8. No suit or action shall be commenced by a Claimant under this Bond other than in a court of competent jurisdiction in the location of the Project or after the expiration of one year from the date which the last labor or service was performed by anyone or the last materials or equipment were furnished by anyone under the Contract. If the provisions of this Paragraph are void or prohibited by law, the minimum period of limitation available to sureties as a defense in the jurisdiction of the suit shall be applicable.

9. Notice to the Surety or the Contractor shall be mailed or delivered to the address shown on the signature page. Actual receipt of notice by Surety or the Contractor, however accomplished, shall be sufficient compliance as of the date received at the address shown on the signature page.

10. Any provision in the Bond conflicting with any applicable law shall be deemed deleted herefrom and provisions conforming to such applicable law shall be deemed incorporated herein.

11. Upon request by any person or entity appearing to be a potential beneficiary of this Bond, the Contractor or Surety shall promptly furnish a copy of this Bond or shall permit a copy to be made.

12. The Contract is hereby made a part of this bond.

13. Surety agrees that it is obligated under this Bond to any successor, grantee or assignee of the Owner.

14. DEFINITIONS

a. Claimants: Individuals or entities that furnish labor, materials or equipment for use in the performance of the Contract. The intent of this Bond shall be to include without limitation in the terms "labor, materials or equipment" that part of water, gas, power, light, heat, oil, gasoline, telephone service or rental equipment used in the Contract, design services required for performance of the Work of the Contractor and the Contractor's subcontractors.

b. Contract: The agreement between the Owner and the Contractor identified in the first page of this Bond, including all Contract Documents and changes thereto.

Address of Owner:	Address of Contractor/Principal:	Address of Surety:
City of Grain Valley, Missouri **711 Main Street** **Grain Valley, MO 64029**	[Insert Name and Address]	[Insert Name and Address]

MAINTENANCE BOND

KNOW ALL PERSONS BY THESE PRESENTS: That _____

_____
(Name of Contractor)

_____
(Address of Contractor)

a _____ hereinafter called Principal, and
(Corporation, Partnership, or Individual)

_____
(Name of Surety)

hereinafter called Surety, are held and firmly bound unto _____

_____
(Name of Owner)

_____
(Address of Owner)

hereinafter called OWNER, and unto all persons, firms, and corporations who or which may furnish labor, or who furnish materials to perform as described under the contract and to their successors and assigns in the total aggregate penal sum of _____ _____ Dollars ($) in lawful money of the United States, for the payment of which sum well and truly to be made, we bind ourselves, our heirs, executors, administrators, successors and assigns, jointly and severally, firmly by these presents.

THE CONDITION OF THIS OBLIGATION is such that, Whereas on the _____ day of _____ , 20 ___, the Principal entered into a written agreement with the OWNER, for the construction and reconstruction, or repair of certain public improvements as designated and described in the said agreement; and

Whereas, it was a condition of the contract award by the Owner that these presents be executed by the Principal and Surety aforesaid, and

Whereas, the Principal agrees to guarantee the work hereinabove described, including all materials and workmanship, for the period of two (2) year(s) beginning on the date the Owner so accepts said Work, said date being the formal acceptance date.

NOW, THEREFORE, if the Principal shall and will, in all particulars, well, duly, and faithfully observe, perform and abide by each and every covenant, condition and part of said written agreement and other Contract Documents and shall protect the Owner against all damages, losses and expenses which may occur to Owner, by reason of defective materials used, or by reason of defective workmanship done, and for the construction, reconstruction or repair of said public improvements, and settlement of backfill excavated areas.

IN WITNESS WHEREOF, this instrument is executed in _____ counterparts, each one of which shall be
Number

deemed an original, this the _____ day of _____ , 20 ___ .

ATTEST:

_____
Principal

_____
(Principal) Secretary

(SEAL) By _____ (s)

_____

_____ _____
(Witness as to Principal) (Address)

_____

_____
(Address)

_____
Surety

ATTEST:

_____ By _____ (s)
(Witness to Surety) Attorney-in-Fact

_____ _____

_____ _____
(Address) (Address)

NOTE:

1. Date of BOND must not be prior to date of contract.
2. If CONTRACTOR is partnership, all partners should execute BOND.
3. Surety companies executing BONDS must appear on the Treasury Department's most current list (Circular 570 as amended) and be authorized to transact business in the state where the Project is located.
4. Accompany this bond with Attorney-in-Fact's Authority from the Surety Company certified to include the date of the bond.

SUBMITTAL TRANSMITTAL

Owner/Job Description

DATE:_____ SUBMITTAL NO.

FROM:

TO: DESIGN PROFESSIONAL
Crawford, Murphy & Tilly, Inc.
1100 Main Street Suite 1210
Kanas City, Missouri 64105

VENDOR:

_____
_____

This is: An original submittal: _____ A revised submittal ____
Previous Submittal No. _____ No. of submittal copies ___

SUBJECT OF SUBMITTAL:

SPECIFICATION AND/OR DRAWING NUMBER:

We have verified that this submittal contains all applicable material and information required for evaluation against the project specifications. Furthermore, we submit these items, which comply with the plans and specifications.

Check One: _____ with no exceptions, _____ except for the following deviations:

NO. DEVIATIONS

_____
_____
_____
_____

CONTRACTOR'S AUTHORIZING STAMP	ENGINEER'S REVIEW STAMP
(Contractor's Authorized Signature)	

ADDITIONAL COMMENTS FROM SIDE 1:

END OF DOCUMENT 00 62 11

EJCDC
ENGINEERS JOINT CONTRACT DOCUMENTS COMMITTEE

Contractor's Application for Payment No.

	Application Period:	Application Date:
To (Owner):	From (Contractor):	Via (Engineer):
Project:	Contract:	
Owner's Contract No.:	Contractor's Project No.:	Engineer's Project No.:

Application For Payment

Change Order Summary

Approved Change Orders		
Number	Additions	Deductions
TOTALS		
NET CHANGE BY CHANGE ORDERS		

1. ORIGINAL CONTRACT PRICE	**$**
2. Net change by Change Orders	**$**
3. Current Contract Price (Line 1 ± 2)	**$**
4. TOTAL COMPLETED AND STORED TO DATE (Column F total on Progress Estimates)	**$**
5. RETAINAGE:	
a. X _____ Work Completed	**$**
b. X _____ Stored Material	**$**
c. Total Retainage (Line 5.a + Line 5.b)	**$**
6. AMOUNT ELIGIBLE TO DATE (Line 4 - Line 5.c)	**$**
7. LESS PREVIOUS PAYMENTS (Line 6 from prior Application)	**$**
8. AMOUNT DUE THIS APPLICATION	**$**
9. BALANCE TO FINISH, PLUS RETAINAGE (Column G total on Progress Estimates + Line 5.c above)	**$**

Contractor's Certification

The undersigned Contractor certifies, to the best of its knowledge, the following:
(1) All previous progress payments received from Owner on account of Work done under the Contract have been applied on account to discharge Contractor's legitimate obligations incurred in connection with the Work covered by prior Applications for Payment;
(2) Title to all Work, materials and equipment incorporated in said Work, or otherwise listed in or covered by this Application for Payment, will pass to Owner at time of payment free and clear of all Liens, security interests, and encumbrances (except such as are covered by a bond acceptable to Owner indemnifying Owner against any such Liens, security interest, or encumbrances); and
(3) All the Work covered by this Application for Payment is in accordance with the Contract Documents and is not defective.

Contractor Signature

By:	Date:

Payment of: $ _____
(Line 8 or other - attach explanation of the other amount)

is recommended by: _____ _____
(Engineer) (Date)

Payment of: $ _____
(Line 8 or other - attach explanation of the other amount)

is approved by: _____ _____
(Owner) (Date)

Approved by: _____ _____
Funding or Financing Entity (if applicable) (Date)

EJCDC® C-620 Contractor's Application for Payment
© 2013 National Society of Professional Engineers for EJCDC. All rights reserved.

Progress Estimate - Unit Price Work

Contractor's Application for Payment

For (Contract):									Application Number:			
Application Period:									Application Date:			
A					B	C	D		E	F		
Item		Contract Information				Estimated Quantity Installed	Value of Work Installed to Date		Materials Presently Stored (not in C)	Total Completed and Stored to Date (D + E)	% (F / B)	Balance to Finish (B - F)
Bid Item No.	Description	Item Quantity	Units	Unit Price	Total Value of Item ($)							

Stored Material Summary

Contractor's Application for Payment

For (Contract):								Application Number:			
Application Period:								Application Date:			
A		B	C		D		E		F		G
Bid Item No.	Supplier Invoice No.	Submittal No. (with Specification Section No.)	Storage Location	Description of Materials or Equipment Stored	Stored Previously: Date Placed into Storage (Month/Year)	Stored Previously: Amount ($)	Amount Stored this Month ($)	Subtotal Amount Completed and Stored to Date (D + E)	Incorporated in Work: Date (Month/ Year)	Incorporated in Work: Amount ($)	Materials Remaining in Storage ($) (D + E - F)

CONTRACTOR'S AFFIDAVIT AND
RELEASE FOR PARTIAL PAYMENT

Application for Payment No.: _____

Application for Payment Application Date: _____

_____ ("Contractor") has entered into a Contract with the City of Grain Valley, Missouri ("Owner") to furnish labor, materials, equipment and services for the construction of improvements located at - _____ ("Project")

For and in consideration of the above-said progress payment under the said Contract, the sufficiency of which is hereby acknowledged, Contractor upon its oath states:

1. Contractor, in making this request for payment, hereby certifies that all work, materials, and services required to date under said Contract have been furnished and that the work has been completed in a satisfactory and workmanlike manner and in compliance with drawings, specifications, instructions and Contract Documents furnished to the Contractor.

2. Contractor also certifies that all work, labor, materials, machinery, and equipment furnished by the Contractor through the date of the last previous Application for payment have been paid for by the Contractor and that there are no amounts unpaid in favor of any subcontractor or materialman or any other person furnishing labor and materials to said Contractor for such period and utilized in the performance of the obligations of the Contractor under the Contract.

3. Contractor warrants and represents that through the date of this Application for Payment it has complied with all applicable laws and requirements of the Contract Documents, including prevailing wage Laws.

4. It is further certified that all amounts, including taxes, required by law or by agreement, to be withheld from employees' wages have been withheld and distributed in the manner provided by law or by the Contract.

5. Except for the amount of retainage, Contractor hereby releases, relinquishes, discharges and waives any and all rights, and claims arising out of labor, services, equipment, and/or materials and supplies ordered, furnished or provided to or in connection with the construction of the Project through the Application for Payment Date stated above, whether such rights or claims arise by virtue of contract, statute, ordinance, regulation, constitution, common law, or otherwise.

CONTRACTOR

BY: _____

(authorized signature)

TITLE: _____

DATE: _____

STATE OF)SS

COUNTY OF _____

The undersigned personally appeared before me, is personally known to me to be the _____ of the above-named Contractor, and after being duly sworn, stated that: he/she was and is duly authorized by the above-named Contractor to make the statements, undertakings, warranties, releases, waivers, and discharges contained in the above and forgoing Contractor's Affidavit and Release for Partial Payment; the statements made therein are true and correct; and, he/she executed the same for the purposes and consideration therein expressed.

Subscribed and sworn before me this day of , 20___.

_____

Notary Public

My Commission Expires:

_____

REQUEST FOR INTERPRETATION

RFI No. _____

Project: _____ RE: _____

Project Number: _____ Date: _____

To: City State,
c/o Crawford, Murphy & Tilly, Inc.,
Street Address
City, State Zip Code

From: _____

Specification Section: _____ Paragraph: _____ Drawing Reference: _____ Detail: _____

Request:

By: _____ Date: _____
Contractor (Authorized Signature)

Response:

Response From: _____

Response To: _____

By: _____ Date: _____
Engineer (Authorized Signature)

(Attach to Substitution Proposal as required by Section 01 25 13)

Project: _____ Substitution Request Number: _____

_____ RE: _____

To: _____ Date: _____

From: _____ Project Number: _____

Specification Title: _____ Description: .

Section: _____ Page: _____ Article/Paragraph: _____

Proposed Substitution: _____

_____

Manufacturer: _____ Address: _____ Phone: _____

Trade Name: _____ Model No.: _____

Installer: _____ Address: _____ Phone: _____

History: ☐ New product ☐ 2-5 years old ☐ 5-10 years old ☐ More than 10 years old

Differences between proposed substitution and specified product: _____

_____

_____

Itemized comparative data attached - REQUIRED BY ENGINEER

Reason for not providing specified item: _____

_____

Similar Installation:

Project: _____ Engineer: _____

Address: _____ Owner: _____

Date Installed: _____

Proposed substitution affects other parts of Work: ☐ No ☐ Yes; explain _____

_____

_____

Savings to Owner for accepting substitution: _____ ($ _____)

Proposed substitution changes Contract Time: ☐ No ☐ Yes [Add] [Deduct] _____ days.

Supporting Data Attached: ☐ Drawings ☐ Product Data ☐ Samples ☐ Tests ☐ Reports ☐ _____

(Substitution Request Continued)

The Undersigned certifies:

- ☐ Proposed substitution has been fully investigated and determined to be equal or superior in all respects to specified product.
- ☐ Same warranty will be furnished for proposed substitution as for specified product.
- ☐ Same maintenance service and source of replacement parts, as applicable, is available.
- ☐ Proposed substitution will have no adverse effect on other trades and will not affect or delay progress schedule.
- ☐ Cost data as stated above is complete. Claims for additional costs related to accepted substitution which may subsequently become apparent are to be waived.
- ☐ Proposed substitution does not affect dimensions and functional clearances.
- ☐ Payment will be made for changes to the design, including Engineer's redesign, detailing, and construction costs caused by the substitution.
- ☐ Coordination, installation, and changes in the Work as necessary for accepted substitution will be complete in all respects.

Submitted by: _____

Signed by: _____

Firm: _____

Address: _____

Telephone: _____

Attachments: _____

_____

_____

_____

Engineer's REVIEW AND ACTION

☐ Substitution approved - Make submittals in accordance with Specification Section 01 33 00.
☐ Substitution approved as noted - Make submittals in accordance with Specification Section 01 33 00.
☐ Substitution rejected - Use specified materials.
☐ Substitution Request received too late - Use specified materials.

Signed by: _____ Date: _____

Additional Comments: ☐ Contractor ☐ Subcontractor ☐ Supplier ☐ Manufacturer ☐ Engineer ☐ _____

_____

_____

_____

_____

_____

_____

_____

CERTIFICATE OF SUBSTANTIAL COMPLETION

DATE OF ISSUANCE_____

PROJECT:

PROFESSIONAL: _____

OWNER: City of Grain Valley, MO
711 Main Street
Grain Valley, MO 64029

CONTRACTOR: _____

This Certificate of Substantial Completion applies to all Work under the Contract Documents pursuant to that certain Agreement between Owner and Contractor dated _____. This Certificate of Substantial Completion is hereby issued by Professional to Owner and Contractor.

The Work has been inspected by authorized representatives of Owner and Professional, and the Work is hereby declared to be substantially complete in accordance with the Contract Documents on _____. (DATE OF SUBSTANTIAL COMPLETION).

A tentative list of items to be completed or corrected is attached hereto. This list may not be all-inclusive, and the failure to include an item in it does not alter the responsibility of Contractor to complete all the Work in accordance with the Contract Documents within the time required by the Contract Documents.

The responsibilities between OWNER and CONTRACTOR for security, maintenance, heat, utilities, insurance and other items shall be as follows:

OWNER_____

CONTRACTOR:_____

This certificate does not constitute an acceptance of Work not in accordance with the Contract Documents nor is it a release of Contractor's obligation to complete the Work in strict accordance with the Contract Documents and within the Contract Times.

Issued and Executed by Professional on _____
Date

_____
"Professional"

By:_____
(Authorized Signature)

CONTRACTOR accepts this Certificate of Substantial Completion on _____
Date

_____
"Contractor"

By:_____
(Authorized Signature)

OWNER accepts this Certificate of Substantial Completion on _____
Date

City of Grain Valley, Missouri
"Owner"

By:_____
(Authorized Signature)

CONTRACTOR's AFFIDAVIT of PAYMENT of DEBTS and CLAIMS

Project Name: _____ CMT Project No.: _____
OWNER: _____ OWNER's Contract No.: _____
CONTRACTOR: _____ CONTRACTOR's Job No.: _____

STATE OF _____)
) SS
COUNTY OF _____)

I _____ being first duly sworn, deposes and
(Name of Affiant for Contractor)

says that he/she is _____ of _____.
(Sole Owner, a Partner, President, Secretary, etc.) (Contractor)

The undersigned hereby certifies that, except as listed below, payment has been made in full and all obligations have otherwise been satisfied for all materials and equipment furnished, for all work, labor, and/or services performed, and for all known indebtedness and claims against the Contractor for damages arising in any manner in connection with the performance of the Contract referenced above for which the Owner or Owner's property might in any way be held responsible or encumbered.

Exceptions:

_____

_____

_____

_____

_____
(Signature of Affiant for Contractor)

Subscribed and sworn to before me this _____ day of _____, 20____.

_____
(Notary Public)

My Commission Expires: _____ _____
(Notary Seal)

END OF AFFIDAVIT

CONTRACTOR's AFFIDAVIT of RELEASE of LIENS

Project Name: _____ CMT Project No.: _____
OWNER: _____ OWNER's Contract No.: _____
CONTRACTOR: _____ CONTRACTOR's Job No.: _____

STATE OF _____)
) SS
COUNTY OF _____)

I _____ being first duly sworn, deposes and
(Name of Affiant for Contractor)

says that he/she is _____ of _____.
(Sole Owner, a Partner, President, Secretary, etc.) (Contractor)

The undersigned hereby certifies that, except as listed below, the Release or Waivers of Lien attached hereto includes the Contractor, all Subcontractors, all suppliers of materials and equipment, and all performers of work, labor and/or services who have or may have liens or encumbrances or the right to assert liens or encumbrances against any property of the Owner arising in any manner out of the performance of the Contract referenced above.

Exceptions:

_____

_____

_____

_____

_____
(Signature of Affiant for Contractor)

Subscribed and sworn to before me this _____ day of _____, 20____.

_____
(Notary Public)

My Commission Expires: _____ _____
(Notary Seal)

END OF AFFIDAVIT

RECEIPT AND RELEASE
FINAL

_____ ("Contractor") has entered into a Contract with Owner of Grain Valley, Missouri ("Owner") to furnish labor, material, equipment and other services for the construction of improvements located at _____ ("Project").

For and in consideration of the sum of $_____ (hereinafter referred to as "Final Payment"), the receipt and sufficiency of which is hereby acknowledged, Contractor hereby releases and forever discharges Owner from any and all claims, demands, and liability of any nature whatsoever arising out of Contractor's participation in the Project, regardless of whether such liability is alleged to arise in tort, strict liability, contract, statute, ordinance, regulation, constitution, common law, or otherwise.

To induce Owner to release the Final Payment to Contractor, Contractor and the person who executes this document on behalf of Contractor warrants, represents, and affirms to Owner that Contractor has paid or caused to be paid all bills, invoices, charges, expenses, or other amounts arising out of labor, services, equipment, and/or materials ordered, provided, or furnished in connection with Contractor's participation in the Project, including but not limited to all payroll and fringe benefit obligations and all applicable federal, state or local taxes or assessments. To induce the Owner to release the Final Payment to Contractor, Contractor and the person who executes this document on behalf of Contractor warrants, represents and affirms to Owner that Contractor has completed the Work in accordance with the Contract Documents, that it has provided all documents, certifications and information to Owner required to receive Final Payment, that it is entitled to Final Payment, and that it has complied with all applicable Laws in performing the Work, including prevailing wage Laws.

Contractor

BY:_____
(authorized signature)

TITLE:_____

STATE OF_____)
) SS
COUNTY OF_____)

The undersigned personally appeared before me, is personally known to me to be the _____ of the above-named Contractor, and after being duly sworn, stated that: he/she was and is duly authorized by the above-named Contractor to make the statements, undertakings, warranties, releases, waivers, and discharges contained in the above and foregoing Receipt and Release; the statements made therein are true and correct; and, he/she executed the same for the purposes and consideration therein expressed.

Subscribed and sworn before me this _____ day of _____, 20___.

_____
Notary Public

My Commission Expires:

_____

CONSENT OF SURETY COMPANY TO FINAL PAYMENT

PROJECT: Water Tower Upgrade
(Name)
1201 Tyer Road
(Street Address)
Grain Valley, MO 64029
(City, State, Zip Code)

CONTRACTOR: _____
(Name)
_____
(Street Address)
_____
(City, State, Zip Code)

TO: CITY OF GRAIN VALLEY, MISSOURI
711 MAIN STREET
GRAIN VALLEY, MO 64029
("OWNER")

CONTRACT FOR:

CONTRACT DATE:

In accordance with the provisions of the Contract between City and Contractor as indicated above, the (here insert name and address of Surety Company as it appears in the bond)_____
_____, SURETY COMPANY,

on bond of (here insert name and address of Contractor as it appears in the bond) _____,
_____, CONTRACTOR,

hereby approves of the final payment to the Contractor, and agrees that final payment to the Contractor shall not relieve the Surety Company of any of its obligations to the Owner as set forth in the said Surety Company's bond.

IN WITNESS WHEREOF,
the Surety Company has hereunto set its hand this _____ day of _____, 20___.

_____
Surety Company

_____
Signature of Authorized Representative

Attest:

(Seal):

_____
Title

GENERAL CONDITIONS
OF THE CONTRACT FOR CONSTRUCTION

City of Grain Valley, Missouri
711 Main ◊ Grain Valley, MO 64029
Phone: (816) 847-6200 ◊ Fax: (816) 847-6209

TABLE OF CONTENTS

ARTICLE 1 DEFINITIONS AND TERMINOLOGY 1
1.01 Defined Terms 1
1.02 Furnish, Install, Perform, Provide 4
ARTICLE 2 PRELIMINARY MATTERS 4
2.01 Delivery of Bonds 4
2.02 Copies of Documents 4
2.03 Before Starting Construction 4
2.04 Preliminary Schedules 5
2.05 Audio/Video Tape Recordings of Surface 5
2.06 Preconstruction Conference 6
2.07 Commencement of Contract Times 6
2.08 Starting the Project 6
2.09 Erosion Control 6
ARTICLE 3 - CONTRACT DOCUMENTS: INTENT, AMENDING, REUSE 7
3.01 Intent 7
3.02 Reference to Standards and Specifications of Technical Societies; Reporting and Resolving Discrepancies 7
3.03 Contractor's Representations 7
3.04 Amending Contract Documents 8
3.05 Reuse of Documents 8
ARTICLE 4 AVAILABILITY OF LANDS: PHYSICAL CONDITIONS: REFERENCE POINTS 8
4.01 Availability of Lands 8
4.02 Subsurface and Physical Conditions 8
4.03 Underground Facilities 9
4.04 Reserved 9
4.05 Hazardous Environmental Conditions at Site 9
4.06 Borrow and Waste Sites 10
ARTICLE 5 INSURANCE AND BONDS 10
5.01 Contractor's Liability Insurance 10
5.02 Commercial General Liability 10
5.03 Automobile Liability 11
5.04 Workers' Compensation Insurance 11
5.05 Miscellaneous Liability Insurance 11
5.06 General Requirements For Liability Insurance Coverages 12
5.07 Property Insurance 13
5.08 Bonds 14
ARTICLE 6 CONTRACTOR'S RESPONSIBILITY 14
6.01 General 14
6.02 Supervision 14
6.03 Labor and Construction Procedures 15
6.04 Materials and Equipment 17
6.05 Quality of Materials and Equipment 17
6.06 Schedule 17
6.07 "Or-Equal" Items 18
6.08 Substitutions 18
6.09 Concerning Subcontractors, Suppliers and Others 19
6.10 Patent Fees and Royalties 20
6.11 Permits and Fees 20
6.12 Laws and Regulations 20
6.13 Prevailing Wage Rates 20
6.14 Taxes 21
6.15 Use of Premises 22
6.16 Site Cleanup 22
6.17 Loading of Structures 22
6.18 Record Documents 22
6.19 Safety and Protection 23
6.20 Safety Representative 23
6.21 Emergencies 23
6.22 Submittals 23
6.23 Contractor's Warranty 25
6.24 Continuing the Work 26
6.25 Indemnification 26
6.26 Survival of Obligations 26

ARTICLE 7 OTHER WORK 26
7.01 Related Work at Site 26
7.02 Coordination 27
7.03 Liability 27
ARTICLE 8 OWNER'S RESPONSIBILITIES 28
8.01 Termination of Professional 28
8.02 Data and Information 28
8.03 Limitations on Owner's Responsibilities 28
ARTICLE 9 PROFESSIONAL'S STATUS DURING CONSTRUCTION 28
9.01 General 28
9.02 Visits to Site 28
9.03 Project Representation 28
9.04 Clarifications and Interpretations 28
9.05 Authorized Variations in Work 28
9.06 Rejecting Defective Work 28
9.07 Submittals 29
9.08 Change Orders 29
9.09 Payments 29
9.10 Determinations for Unit Prices 29
9.11 Limitations on Professional's Responsibilities 29
9.12 Terminology 29
ARTICLE 10 CHANGES IN THE WORK AND CLAIMS 29
10.01 Authorized Changes in Work 29
10.02 Unauthorized Changes in Work 30
10.03 Notice to Surety 30
10.04 Claims 30
ARTICLE 11 CHANGE OF CONTRACT PRICE 30
11.01 Contract Price 30
11.02 Change 30
11.03 Determination of Adjustment 31
11.04 Cost of the Work 31
11.05 Costs Excluded 32
11.06 Contractor's Fee 32
11.07 Submission of Itemized Costs 33
11.08 Allowance 33
ARTICLE 12 CHANGE OF CONTRACT TIMES 33
12.01 Claims for Additional Time 33
12.02 Delays of Contract Times 33
12.03 Delay Damages 34
12.04 Liquidated Damages 34
ARTICLE 13 TESTS AND INSPECTIONS; CORRECTION, REMOVAL OR ACCEPTANCE OF DEFECTIVE WORK 34
13.01 Access to Work 34
13.02 Tests and Inspections 34
13.03 Uncovering Work 35
13.04 Owner May Stop the Work 35
13.05 Correction or Removal of Defective Work 35
13.06 Guarantee Period 35
13.07 Acceptance of Defective Work 36
13.08 Owner May Correct Defective Work 36
ARTICLE 14 PAYMENTS TO CONTRACTOR AND COMPLETION 37
14.01 Contract Price 37
14.02 Basis Of Progress Payments 37
14.03 Applications For Payment 37
14.04 Approval For Payment 38
14.05 Decisions To Withhold Approval 38
14.06 Progress Payments 38
14.07 Failure Of Payment 39
14.08 Substantial Completion 39
14.09 Partial Occupancy Or Use 39
14.10 Final Completion And Final Payment 39

ARTICLE 15 SUSPENSION OF WORK AND TERMINATION 40
15.01 Termination by Owner for Cause 40
15.02 Notice of Termination 41
15.03 Suspension by the Owner for Convenience 41
15.04 Owner's Termination For Convenience 42
ARTICLE 16 DISPUTE RESOLUTION 42
16.01 Methods and Procedures 42
16.02 Continuing Performance 43
16.03 Exceptions 43
ARTICLE 17 MISCELLANEOUS 43
17.01 Notice 43
17.02 Rights and Remedies 43
17.03 Buy American Requirements 43
17.04 Successors and Assigns 44
17.05 Records 44
17.06 General 44

GENERAL CONDITIONS

ARTICLE 1 – DEFINITIONS AND TERMINOLOGY

1.01 Defined Terms

A. Wherever used in these General Conditions or in the other Contract Documents the following terms have the meanings indicated which are applicable to both the singular and plural thereof:

1. Abbreviations - Wherever in these specifications and Contract Documents the following abbreviations are used, they shall be the latest year of adoption or revision, unless otherwise specified:

A.A.S.H.T.O.	American Association of State Highway and Transportation Officials
A.C.I.	American Concrete Institute
A.I.S.C.	American Institute of Steel Construction
A.P.W.A.	Kansas City Metropolitan Chapter of the American Public Works Association
A.R.E.A.	American Railway Professionaling Association
A.S.T.M.	American Society for Testing and Materials
A.W.S.	American Welding Society
A.W.W.A.	American Water Works Association
C.R.S.I.	Concrete Reinforcing Steel Institute
M.C.I.B.	Midwest Concrete Industry Board, Inc.
MoDOT	Missouri Highway and Transportation Department
M.S.S.H.C.	Missouri Standard Specifications for Highway Construction
U.S.A.S.I.	United States of America Standards Institute
U.B.C.	Uniform Building Code
B.O.R.	Board of Outdoor Recreation
I.S.S.A	International Slurry Surfacing Association

2. Addenda - Written or graphic instruments issued prior to the opening of Bids which clarify, correct or change the Bidding Documents or the Contract Documents.

3. Agreement - The written agreement between Owner and Contractor covering the Work to be performed; other Contract Documents are attached to or referred to in the Agreement and are made a part thereof as provided therein.

4. Application for Payment - The form provided by Owner which is to be used by Contractor in requesting progress or final payments and which is to include such supporting documentation as is required by the Contract Documents.

5. Asbestos - Any material that contains more than one percent asbestos and is friable or is releasing asbestos fibers into the air above current action levels established by the United States Occupational Safety and Health Administration.

6. Bonds - Performance and Payment Bonds and any other instruments of security.

7. Change Order - Contractor's and Owner's and agreement with respect to an addition, deletion or revision in the Work, or an adjustment in the Contract Price or the Contract Times, issued on or after the Effective Date of the Agreement, as set forth in Paragraph 10.01 B.

8. Contract Documents - The Agreement, all Addenda which pertain to the Contract Documents, and identified in the Agreement, the Bonds, these General Conditions, the Supplementary Conditions, if any, the Specifications and the Drawings as the same are more specifically identified in the Agreement, any other document identified in the Agreement as part of the Contract Documents, and Modifications issued after execution of the Agreement. A Modification is: (a) a written amendment to the Contract signed by both parties; (b) a Change Order, or; (c) a Field Order. Shop Drawings, Submittals and reports and drawings of subsurface and physical conditions identified in Exhibit A to the Agreement are not Contract Documents.

9. Contract - The Contract Documents form the Contract. The Contract represents the entire and integrated agreement between the parties hereto and supersedes prior representations or agreements, either written or oral. The Contract may be amended or modified only by a written Modification defined above. The Contract Documents shall not be construed to create a contractual relationship of any kind between the Owner and a Subcontractor or any lower-tier Subcontractor of any tier or a Supplier.

10. Contract Price - The moneys payable by Owner to Contractor under the Contract Documents as stated in the Agreement.

11. Contract Times - The number of calendar days, or the completion dates stated in the Agreement: (i) to achieve Substantial Completion, and (ii) to achieve Final Completion.

12. Contractor - The person, firm, or corporation, with whom Owner has entered into the Agreement.

13. Day – a calendar day of 24 hours measured from midnight to the next midnight.

14. Defective - An adjective which when modifying the word Work refers to Work that is unsatisfactory, faulty or deficient, or does not conform to the Contract Documents, or does not meet the requirements of any inspection, reference standard, test or approval referred to in the Contract Documents, or has been damaged prior to Professional's recommendation of final payment.

15. Drawings - The drawings which show the character and scope of the Work to be performed and which have been prepared or provided by Professional and are referred to in the Contract Documents. Shop drawings are not Drawings as so defined.

16. Effective Date of the Agreement - The date indicated in the Agreement on which it becomes effective, but if no such date is indicated it means the date on which the Agreement is signed and delivered by the last of the two parties to sign and deliver.

17. Field Order – A written order issued by Professional or Owner which orders minor changes in the Work in accordance with Paragraph 10.01 E. but which does not involve a change in the Contract Price or the Contract Times.

18. Final Completion - Final Completion shall mean the date upon which the Professional certifies that the Work has been completed in strict accordance with the terms and conditions of the Contract Documents, including all Punch List items, that all documents and information required by the Contract Documents have been submitted to Owner by Contractor and that the entire balance of the Contract Price is due and payable to Contractor.

19. General Requirements - Section VII of the Contract Documents. The General Requirements pertain to all sections of the Specifications.

20. Hazardous Waste - The term Hazardous Waste shall have the meaning provided in Section 1004 of the Solid Waste Disposal Act (42 USC Section 6903) as amended from time to time.

21. Laws and Regulations- Any and all applicable laws, rules, regulations, ordinances and codes and interpretations thereof and any orders of any and all governmental bodies, agencies, authorities and courts having jurisdiction.

22. Liens - Liens, charges, security interests or encumbrances upon real property, Project funds or personal property.

23. Lump Sum Price Contract - A lump sum price contract is a contract for which compensation for the Work is based on one lump sum amount without regard to any units or portions of the Work accomplished.

24. Notice of Award - The written notice by Owner to the apparent successful bidder stating that upon compliance by the apparent successful Bidder with the conditions precedent enumerated therein, within the time specified, Owner will sign and deliver the Agreement.

25. Notice to Proceed - A written notice given by Owner to Contractor fixing the date on which the Contract Times will commence to run and on which Contractor shall start to perform Contractor's obligations under the Contract Documents.

26. Owner – The City of Grain Valley, Missouri with whom Contractor has entered into the Agreement and for whom the Work is to be provided.

27. Partial Utilization - Placing a portion of the Work in service for the purpose for which it is intended (or a related purpose) before reaching Substantial Completion for all the Work.

28. PCBs - Polychlorinated biphenyls.

29. Pavement - Rigid or flexible type riding surface placed upon a previously prepared Sub-grade or base.

30. Petroleum - Petroleum, including crude oil or any fraction thereof which is liquid at standard conditions of temperature and pressure (60 degrees Fahrenheit and 14.7 pounds per square inch absolute), such as oil, petroleum, fuel oil, oil sludge, oil refuse, gasoline's, kerosene, and oil mixed with other non-Hazardous Wastes and crude oils.

31. Product Data - Illustrations, standard schedules, performance charts, instructions, brochures, diagrams and other information furnished by the Contractor to illustrate materials or equipment for some portion of the Work.

32. Professional - The person, firm or corporation named as such in the Agreement.

33. Project - The total construction of which the Work to be provided under the Contract Documents may be the whole or a part as indicated elsewhere in the Contract Documents.

34. Punch List - The list of items, prepared in connection with the inspection of the Project by the Professional in connection with Substantial Completion of the Work or a portion of the Work, which the Owner's Representative or Professional has designated as remaining to be performed, completed or corrected before the Work will be accepted by the Owner.

35. Radioactive Material - Source, special nuclear, or byproduct material as defined by the Atomic Energy Act of 1954 (42 USC Section 2011 et seq.) as amended from time.

36. Resident Project Representative - The authorized representative of Professional who is assigned to the Project site or any part thereof.

37. Samples - Physical examples of materials, equipment or workmanship that are representative of some portion of the Work and which establish the standards by which such portion of the Work will be judged.

38. Site – Lands or areas indicated in the Contract Documents as being furnished by Owner which are designated for the use of the Contractor.

39. Shop Drawings - All drawings, diagrams, illustrations, performance charts, instructions, brochures, schedules and other data which are specifically prepared by or for Contractor to illustrate some portion of the Work.

40. Specifications - Those portions of the Contract Documents consisting of written technical descriptions of materials, equipment, construction systems, standards and workmanship as applied to the Work and certain administrative details applicable thereto.

41. Standard Specifications - The officially adopted "Standard Specifications" as adopted by the Owner.

42. Subcontractor - Any individual or entity having a direct contract with Contractor for the performance of the Work at the Site or any person or entity having a contract with a Subcontractor or any lower tier Subcontractor for the performance of part of the Work at the Site.

43. Street, Road or Alley - The whole area within the right-of-way limits.

44. Sub-Grade - That portion of the construction area which has been prepared as specified and upon which a layer of specified material, base, sub-base course, pavement, or other improvement is to be placed.

45. Substantial Completion - The Work (or a specified part thereof) has progressed to the point where, in the opinion of Professional as evidenced by Professional's definitive certificate of Substantial Completion, it is sufficiently complete, in accordance with the Contract Documents, so that the Work (or specified part) can be utilized for the purposes for which it is intended and Owner has obtained any approvals, permits or certificates of occupancy from any applicable governmental entity or agency so that the Work can be utilized for its intended purposes. The terms "substantially complete" and "substantially completed" as applied to any Work refer to Substantial Completion thereof.

46. Supplementary Conditions - The part of the Contract Documents which amends or supplements these General Conditions.

47. Supplier - A manufacturer, fabricator, distributor, material man or vendor having a direct contract with Contractor or with any Subcontractor or with any lower tier Subcontractor to furnish materials or equipment to be incorporated in the Work.

48. Underground Facilities - All pipelines, conduits, ducts, cables, wires, manholes, vaults, tanks, tunnels or other such facilities or attachments, and any encasements containing such facilities which have been installed underground to furnish any of the following services or materials: electricity, gases, steam, liquid petroleum products, telephone or other communications, cable television, sewage and drainage removal, traffic or other control systems or water.

49. Unit Price Work - Work to be paid for on the basis of unit prices.

50. Work - The supervision, labor, equipment, tools, material, supplies, incidentals, operations and activities required by the Contract Documents or reasonably inferable by Contractor therefrom as necessary to produce the results intended by the Contract Documents in a safe, expeditious, orderly, and workmanlike manner, and in the best manner known to each respective trade. The Work may constitute the whole or part of the Project.

51. Work Change Directive - A written directive to Contractor, issued on or after the Effective Date of Agreement and signed by Owner and approved by Professional, ordering an addition, deletion or revision in the Work, or responding to differing or unforeseen physical conditions under which the Work is to be performed as provided in Sections 4.02 or 4.03 or to emergencies under Paragraph 6.21. A Work Change Directive will not change the Contract Price or the Contract Times, but is evidence that the parties expect that the change directed or documented by a Work Change Directive will be incorporated in a subsequently issued Change Order following negotiations by the parties as to its effect, if any, on the Contract Price or Contract Times as provided in Article 10.

52. Written Amendments - A written amendment of the Contract Documents, signed by Owner and Contractor on or after the Effective Date of the Agreement and normally dealing with the non-engineering or non-technical matters rather than strictly construction-related aspects of the Contract Documents.

1.02 Furnish, Install, Perform, Provide

A. The word “furnish,” when used in connection with services, materials, or equipment, shall mean to supply and deliver said services, materials, or equipment to the Site ready for use or installation and in usable or operable condition.

B. The word “install,” when used in connection with services, materials, or equipment, shall mean to put into use or place in final position said services, materials, or equipment complete and ready for intended use.

C. The words “perform” or “provide,” when used in connection with services, materials, or equipment, shall mean to furnish and install said services, materials, or equipment complete and ready for intended use.

D. When “furnish,” “install,” “perform,” or “provide” is not used in connection with services, materials, or equipment in a context clearly requiring an obligation of Contractor, “provide” is implied.

ARTICLE 2 - PRELIMINARY MATTERS

2.01 Delivery of Bonds

A. When Contractor delivers the executed Agreement to Owner, Contractor shall also deliver to Owner such Bonds as Contractor is required to furnish by the Contract Documents.

2.02 Copies of Documents

A. Owner shall furnish to Contractor up to five (5) copies of the Contract Documents as are reasonably necessary for the execution of the Work. Additional copies will be furnished, upon request, at the cost of reproduction.

2.03 Before Starting Construction

A. Since the Contract Documents are complimentary, before starting each portion of the Work, the Contractor shall carefully study and compare the various Drawings and other Contract Documents relative to that portion of the Work, as well as the information furnished by the Owner, shall take field measurements of any existing conditions related to that portion of the Work and shall observe any conditions at the Site affecting it. These obligations are for the purpose of facilitating construction by the Contractor; however, any errors, inconsistencies or omissions discovered by the Contractor shall be reported promptly to the Professional as a request for information in such form as the Professional may require. Contractor shall not be liable to Owner or Professional for failure to report

any error, inconsistencies or omissions in the Contract Documents, unless Contractor had actual knowledge thereof or should reasonably have known thereof.

B. Any design error, inconsistencies or omissions noted by the Contractor during any review of the Contract Documents shall be reported promptly to the Professional.

C. If the Contractor believes that additional cost or time is involved because of clarifications or instructions issued by the Professional in response to the Contractor's notices or requests for information pursuant to Subparagraphs 2.03 A. or 2.03 B., the Contractor shall make Claims as provided in Articles 11 and/or 12. If the Contractor fails to perform the obligations of Subparagraphs 2.03 A. or 2.03 B., the Contractor shall pay such costs and damages to the Owner as would have been avoided if the Contractor had performed such obligations.

D. Before any Work at the site is started, Contractor shall deliver to Owner, with a copy to Professional, certificates (and other evidence of insurance requested by Owner) which Contractor is required to purchase and maintain in accordance with Sections 5.01, 5.02, 5.03, 5.04, 5.05 and 5.06 and 5.07.

2.04 Preliminary Schedules

A. Within ten (10) days after the Effective Date of the Agreement (unless otherwise specified in the General Requirements) Contractor shall submit to Professional for its timely review: (a) a preliminary construction schedule; and (b) a preliminary schedule for Submittals which will list each required submittal and the times for submitting, reviewing, and process such Submittals. The construction schedule shall be in a detailed format satisfactory to the and the Professional which shall also: (1) provide a graphic representation of all activities and events that will occur during performance of the Work; (2) identify each phase of construction and occupancy; and (3) set forth dates that are critical in ensuring the timely and orderly completion of the Work in accordance with the requirements of the Contract Documents (hereinafter referred to as Milestones). If Professional has a reasonable objection to the construction schedule or schedule for Submittals by Contractor, the construction schedule shall be promptly revised by the Contractor in accordance with the recommendations of the Professional and re-submitted for acceptance. Such acceptance will not impose on Professional or Owner responsibility for the construction schedule or schedule for Submittals, schedule, for sequencing, scheduling or progress of the Work nor interference with or relieve Contractor from Contractor's full responsibility thereof.

2.05 Audio/Video Tape Recordings of Surface

A. Before starting the Work, the Contractor shall record the following surface conditions in audio and video form in the presence of the Professional and Owner in the following means:

1. The following location information shall be provided on color audio/video tape recording while walking the construction route.

a. Audio: Each recording shall begin with a verbal description of the current date, project name and municipality and be followed by the general location, (i.e., name of street, viewing side and direction of progress).

b. Video: Transparent information must appear on the viewing screen. This information will consist of the date and time of recording. The date information will contain the month, day and year.

c. Digital: To preclude the possibility of tampering or editing in any manner, all video recordings must, by electronic means, display continuously and simultaneously generated transparent digital information to include the date and time of recording. The date information will contain the month, day and year.

2. The taped coverage shall include all surface features located within the zone of influences of construction supported by appropriate audio description. Audio description shall be made simultaneously with video coverage. Such coverage shall include, but not be limited to, all existing driveways, sidewalks, fences, curbs, ditches, roadways, landscaping, trees, culverts, headwalls, retaining walls, or buildings located within such zone of influence, Particular and detailed attention shall be given to any defects noted, such as cracks, disturbed areas, damaged items, or as may be required by the Professional. It is the intent of this coverage to accurately and clearly document pre-existing conditions and especially any items that could result in construction claims. **The excavation areas shall be physically marked with high visibility fluorescent paint prior to video taping. The markings shall include the job number and stationing.**

3. The zone of influence shall be defined as an area within 30 feet of the proposed work, and an additional 20 feet of supplemental coverage shall be provided in residential areas.

4. The Contractor shall be able to televise and tape areas with paved roads, along co-owned easements through parks, lawns, and open fields. If video taping on private property, the Contractor shall give the Owner sufficient prior notice of such entry so that property owners may be advised of and their permission obtained for the work.

5. To produce the proper detail and perspective, adequate lighting will be required to fill in the shadow areas caused by trees, utility poles, road signs and other such objects in residential areas or as directed by the Professional.

6. Houses and buildings shall be identified visually by house number, when visible, in such a manner that structures of the proposed system, (i.e., manholes on a sewer system and hydrants on a water system), can be located by reference.

7. Panning rates and zoom-in, zoom-out rates shall be controlled sufficiently such that during playback will produce clarity of the object viewed. The playback picture shall be in focus and be of extreme clarity at all times.

8. All taping shall be done during times of good visibility. No taping shall be done during periods of visible precipitation, or when more than 10% of the ground area is covered with snow, unless otherwise authorized by the Professional.

9. Professional shall have the authority to designate what areas may be omitted or added for audio-video coverage.

10. All tapes (cassettes and cases) shall be properly identified by tape number, location and project name and municipality in a manner acceptable to the Professional.

11. A record of the contents of each tape shall be supplied by a run sheet identifying each segment in the tape by location, i.e., roll number, street or road viewing, tape counter number, viewing side, point starting from, traveling direction and ending destination point.

12. Any portion of the video tape recording not conforming to specifications shall be rejected.

13. Any taped coverage not acceptable to the owner shall be re-filmed at no additional charge. The Contractor shall reschedule unacceptable coverage five (5) days after being notified.

14. One original and two copies are to be provided. Original to Owner, one copy to Professional, and one copy to Contractor.

15. Payment will be at the contract lump sum price for Video Documentation which price shall include all labor, equipment, and materials necessary to complete the work.

16. The taping shall be performed while a representative of the City and Professional is present. The City shall be notified a minimum of 48 hours in advance.

2.06 Preconstruction Conference

A. Within twenty (20) days after the Effective Date of the Agreement, but before Contractor starts the Work at the site, a conference attended by Contractor, Professional and others as appropriate will be held to discuss the schedules referred to in Section 2.04, to discuss procedures for handling Shop Drawings and other submittals and for processing Applications for Payment, and to establish a working understanding among the parties as to the Work.

2.07 Commencement of Contract Times

A. The Contract Times will commence to run on the day indicated in the Notice to Proceed. A Notice to Proceed may be given at any time within thirty (30) days after the Effective Date of the Agreement.

2.08 Starting the Project

A. Contractor shall start to perform the Work on the date when the Contract Times commence to run, but no Work shall be done at the Site prior to the date on which the Contract Times commence to run.

2.09 Erosion Control

A. Contractor shall submit an erosion control plan for approval and shall implement the approved plan prior to any Work being performed.

ARTICLE 3 - CONTRACT DOCUMENTS: INTENT, AMENDING, REUSE

3.01 Intent

A. The Contract Documents comprise the entire agreement between Owner and Contractor concerning the Work. The Contract Documents are complimentary; what is called for by one is as binding as if called for by all.

B. It is the intent of the Contract Documents to describe a functionally complete Project (or part thereof) to be constructed in accordance with the Contract Documents. Any Work, materials or equipment that may reasonably be inferred from the Contract Documents or from prevailing custom or trade usage as being required to produce the intended result will be furnished and performed whether or not specifically called for at no additional cost to Owner. When words or phrases which have a well-known technical or construction industry or trade meaning are used to describe Work, materials or equipment, such words or phrases shall be interpreted in accordance with that meaning. Clarifications and interpretations of the Contract Documents shall be issued by Professional.

3.02 Reference to Standards and Specifications of Technical Societies; Reporting and Resolving Discrepancies

A. Reference to standard specifications, manuals or codes of any technical society, organization or association, or to the Laws or Regulations of any governmental authority, whether such reference be specific or by implication, shall mean the latest standard specification, manual, code or Laws or Regulations in effect at the time of opening of Bids, except as may be otherwise specifically stated in the Contract Documents.

B. No provision of any referenced standard specification, manual or code (whether or not specifically incorporated by reference in the Contract Documents) shall be effective to change the duties and responsibilities of Owner, Contractor or Professional, or any of their consultants, agents or employees from those set forth in the Contract Documents, nor shall it be effective to assign to Professional or Owner, or any of Professional's or Owner's consultants, agents or employees, any duty or authority to supervise or direct the furnishing or performance of the Work or any duty or authority to undertake responsibility contrary to the provisions of the Contract Documents.

C. Except as otherwise specifically stated in the Contract Documents or as may be provided by a modification, the provisions of the Contract Documents shall take precedence in resolving any conflict, error, ambiguity or discrepancy between the provisions of the Contract Documents and:

1. the provisions of any standard, specification, manual, code or instruction (whether or not specifically incorporated by reference in the Contract Documents); or

2. the provisions of any such Laws or Regulations applicable to the performance of the Work (unless such an interpretation of the provisions of the Contract Documents would result in violation of such Law or Regulation).

D. Drawings are intended to show general arrangements, design, and dimensions of the Work and are partly diagrammatic. Dimensions shall not be determined by scale or rule. If figured dimensions are lacking, they shall be supplied by the Professional on the Contractor's written request to the Professional. Where, on any Drawings, a portion of the Work is drawn out and the remainder is indicated in outline, the parts drawn out shall apply also to all other like portions of the Work. Where ornaments or other details are indicated by starting only, such details shall be continued throughout the courses or parts in which they occur and shall also apply to all other similar parts in the Work, unless otherwise indicated. In case of differences between small and large scale drawings, the larger scale drawings shall govern.

3.03 Contractor's Representations

A. Except as to any reported errors, inconsistencies or omissions, by executing the Contract, the Contractor represents the following:

1. The Contract Documents are sufficiently complete and detailed for the Contractor to (a) perform the Work required to produce the results intended by the Contract Documents and (b) comply with all the requirements of the Contract Documents; and

2. The Work required by the Contract Documents, including, without limitation, all construction details, construction means, methods, procedures and techniques necessary to perform the Work, use of materials, selection of equipment and requirements of product manufacturers are consistent with: (a) good and sound practices within the construction industry; (b) generally prevailing and accepted industry standards applicable to the Work; (c) requirements of any warranties applicable to the Work; and (d) all laws, ordinances, regulations, rules and orders which bear upon the Contractor's performance of the Work.

B. Execution of the Agreement by the Contractor is a representation that the Contractor has visited the site, become familiar with local conditions under which the Work is to be performed and correlated personal

observations with requirements of the Contract Documents. Contractor represents that it has performed its own investigation and examination of the Project site and its surroundings and satisfied itself before entering into this Contract as to:

1. conditions bearing upon transportation, disposal, handling and storage of materials;
2. the availability of labor, materials, equipment, water, electrical power, utilities and roads;
3. uncertainties of weather, river stages, flooding and similar characteristics of the site;
4. conditions bearing upon security and protection of material, equipment and Work in progress;
5. the form and nature of the Project site, including the surface and sub-surface conditions;
6. the extent and nature of Work and materials necessary for the execution of the Work and the remedying of any defects therein; and
7. the means of access to the site and the accommodations it may require and, in general, shall be deemed to have obtained all information as to risks, contingencies and other circumstances.

3.04 Amending Contract Documents

A. The Contract Documents may be amended only by a Modification.

3.05 Reuse of Documents

A. Neither Contractor nor any Subcontractor, Supplier, other person or organization performing or furnishing any of the Work under a direct or indirect contract with Owner shall have or acquire any title to or ownership rights in any of the Drawings, Specifications or other documents (or copies of any thereof). They shall not reuse any of them on extensions of the Project or any other project without written consent of Owner and specific written verification or adaptation by the Professional who prepared the documents. This prohibition shall survive final payment, completion, acceptance of the Work, or termination or completion of the Contract. Nothing contained herein shall preclude Contractor from retaining copies of the Contract Documents for record purposes.

ARTICLE 4 - AVAILABILITY OF LANDS: PHYSICAL CONDITIONS: REFERENCE POINTS

4.01 Availability of Lands

A. Contract Times Owner shall obtain all lands and rights-of-way upon which the Work is located prior to the issuance of a notice to proceed, except as set forth in the Contract Documents. In the event Owner is unable to acquire all lands and rights-of-way prior to the issuance of the notice to proceed, Owner shall notify the Contractor of which lands and rights-of-way have not been obtained and will proceed with Work only upon lands and rights-of-way Owner has obtained. The Contractor recognizes this risk and this contingency has been included in the Contract Price. Owner, with reasonable promptness, shall obtain the lands and rights-of-way upon which the Work is located. In no event will the Contractor be entitled to monetary compensation for Owner's reasonable delay in obtaining the lands or rights-of-way, since this contingency has been included in the Contract Price. The Contractor's sole recovery will be in the form of an extension of time, if appropriate. Contractor shall provide for all additional lands and access thereto that may be required for temporary construction facilities or storage of materials and equipment.

4.02 Subsurface and Physical Conditions

A. If conditions are encountered at the site which are (1) subsurface or otherwise concealed physical conditions, other than Underground Facilities, which differ materially from those indicated in the Contract Documents, or (2) unknown physical conditions, other than Underground Facilities, of an unusual nature, which differ materially from those ordinarily found to exist and generally recognized as inherent in construction activities of the character provided for in the Contract Documents, then notice by the Contractor shall be given to the Professional promptly before conditions are disturbed, and in no event later than three (3) days after first observance of the conditions. The Professional will promptly investigate such conditions. If such conditions differ materially, as provided for above and cause an increase or decrease in the Contractor's cost of, or time required for performance of the Work, an equitable adjustment in the Contract Price or Contract Times, or both, shall be made, subject to the provisions and restrictions set forth herein. If Professional determines that the conditions at the site are not materially different from those indicated in the Contract Documents, and that no change in the terms of the Contract is justified, Professional will so notify the Contractor in writing. If the Contractor disputes the finding of the Professional that no change in the terms of the Contract is justified, Contractor shall proceed with the Work, taking whatever steps are necessary to overcome or correct such conditions so that Contractor can proceed in a timely manner. The Contractor shall have the right to file a Claim in accordance with the Contract Documents.

B. It is expressly agreed that no adjustment in the Contract Times or Contract Price shall be permitted, however, in connection with a concealed or unknown condition which does not differ materially from those conditions disclosed or which reasonably should have been disclosed by the Contractor's (1) prior inspections, tests, reviews and preconstruction investigations for the Project, or (2) inspections, tests, reviews and preconstruction inspections which the Contractor had the opportunity to make or should have performed in connection with the Project. The Owner assumes no responsibility for any conclusions or interpretations based upon information relating to sub-surface or other site conditions made available by the Owner, and marked "for informational purposes only." The Owner and Professional do not warrant the accuracy of any information relating to sub-surface conditions contained in reports, documents and drawings made available to Contractor marked "for informational purposes only" and such documents are not Contract Documents. Contractor may not rely upon the accuracy or completeness of such reports and drawings and should perform its own tests and investigations of the same. Contractor shall make no claim against the Owner or Professional for any inaccuracy of such information, reports, documents or drawings, including any Claim that the physical conditions are different than those indicated in such reports and drawings.

4.03 Underground Facilities

A. The information and data shown or indicated in the Contract Documents with respect to existing Underground Facilities at or contiguous to the site is based on information and data furnished to Owner or Professional by the Owners of such Underground Facilities or by others. Unless it is otherwise expressly provided in the Supplementary Conditions:

1. Owner and Professional shall not be responsible for the accuracy or completeness of any such information; and

2. Contractor shall have full responsibility for reviewing and checking all such information and data, locating all Underground Facilities shown or indicated in the Contract Documents, coordination of the Work with the Owners of such Underground Facilities during construction, the safety and protection thereof as provided in Paragraph 6.21 and repairing any damage thereto resulting from the Work, the cost of all of which will be considered as having been included in the Contract Price.

B. If an Underground Facility is uncovered or revealed at or contiguous to the site which was not shown or indicated in the Contract Documents and which Contractor could not reasonably have been expected to be aware of, Contractor shall, promptly after becoming aware thereof and before performing any Work affected thereby (except in an emergency as permitted by Paragraph 6.21) identify the Owner of such Underground Facility and give written notice thereof to that Owner and to Owner and Professional.

1. Professional will promptly review the Underground Facility to determine the extent to which the Contract Documents should be modified to reflect and document the consequences of the existence of the Underground Facility, and the Contract Documents will be amended or supplemented to the extent necessary. During such time, Contractor shall be responsible for the safety and protection of such Underground Facility as provided in Article 6.20.

2. Contractor shall be allowed an increase in the Contract Price or an extension of the Contract Times, or both, to the extent that they are attributable to the existence of any Underground Facility that was not shown or indicated in the Contract Documents and which Contractor could not reasonably have been expected to be aware of. If the parties are unable to agree as to the amount or length thereof, Contractor may make a claim therefor as provided in Articles 11 and 12.

4.04 Reserved

4.05 Hazardous Environmental Conditions at Site

A. Contractor shall not be responsible for any Asbestos, PCBs, Petroleum, Hazardous Waste or Radioactive Material uncovered or revealed at the site which was not shown or indicated in Drawings or Specifications or identified in the Contract Documents to be within the scope of the Work and which may present a substantial danger to persons or property exposed thereto in connection with the Work at the Site. Contractor shall be responsible for any such materials brought to the site by Contractor, Subcontractor, Suppliers or anyone else for whom Contractor is responsible.

B. Contractor shall immediately: (1) stop all Work in connection with such hazardous condition and in any area affected thereby (except in an emergency as required by Paragraph 6.21), and (2) notify Owner and Professional (and thereafter confirm such notice in writing). Owner shall promptly consult with Professional concerning the necessity for Owner to retain a qualified expert to evaluate such hazardous condition or take corrective action, if any. Contractor shall not be required to resume Work in connection with such hazardous condition or in any such affected area until after Owner has obtained any required permits related thereto and

delivered to Contractor special written notice: (a) specifying that such condition and any affected area is or has been rendered safe for the resumption of Work, or (b) specifying any special conditions under which such Work may be resumed safely. If Owner and Contractor cannot agree as to entitlement to or the amount or extent of any adjustment, if any, in Contract Price or Contract Times as a result of such work stoppage or such special conditions under which Work is agreed by Contractor to be resumed, Contractor may make a claim therefor as provided in Articles 11 and 12.

C. If after receipt of such special written notice Contractor does not agree to resume such Work based on a reasonable belief it is unsafe, or does not agree to resume such Work under such special conditions, the Owner may order such portion of the Work that is in connection with such hazardous condition or in such affected area to be deleted from the Work. If Owner and Contractor cannot agree as to entitlement to or the amount or extent of any adjustment, if any, in Contract Price or Contract Times as a result of deleting such portion of the Work, then either party may make a claim therefor as provided in Articles 11 and 12. Owner may have such deleted portion of the Work performed by Owners' own forces or others in accordance with Article 7.

D. It is acknowledged and agreed by Contractor that in no event shall Owner have any responsibility for any substance or material that is brought to the Project site by the Contractor, any Subcontractor of any tier, any materialman, Supplier or any person or entity for whom any of them is responsible. If Contractor brings to the Project site any hazardous material, toxic material or any material regulated by any Laws, Contractor shall notify Professional in writing and Contractor shall comply with all applicable Laws relating thereto and accept sole responsibility for compliance with all environmental quality standards, limitations and permit requirements promulgated thereunder, including without limitation federal, state and local air quality standards for fugitive dust control, prevention of surface and ground water contamination and hazardous and other waste disposal practices and procedures. Contractor shall utilize the highest degree of care in handling such materials and in taking all necessary precautions and measures to prevent any spills of such materials. The Contractor shall defend, indemnify and hold harmless the Owner from any and all claims, costs, losses, damages and expenses, including reasonable attorneys' fees and expert fees, prosecutions, payment of any and all fines or penalties, and the cost of abatement or remediation arising out of or relating to a hazardous condition created by Contractor, Subcontractor, Supplier, or anyone else for whom Contractor is responsible.

E. Contractor shall be responsible for coordinating any exchange of material safety data sheets or other hazard communication information required to be made available to or exchanged between or among employers of the site in accordance with all applicable Laws.

4.06 Borrow and Waste Sites

A. Unless borrow or waste sites are designated on the Plans or specified in the Supplementary Conditions, the Contractor shall secure and operate such sites at their own expense. These borrow and waste sites shall be operated in such a manner as to meet safety and health requirements all Laws and Regulations.

ARTICLE 5 - INSURANCE AND BONDS

5.01 Contractor's Liability Insurance

A. Contractor shall secure from the date of the Agreement and maintain for such periods of time as set forth below, insurance of such types and in such amounts specified in Sections 5.02 through 5.05, inclusive. The form of such insurance together with carriers thereof, shall satisfy the requirements set forth below in Sections 5.02 through 5.06, inclusive.

5.02 Commercial General Liability

A. Contractor shall secure and maintain from the date of the Agreement and for a period of at least two (2) years from the date of Final Completion of the entire Work commercial general liability insurance ("CGL") with a combined single limit of not less than Two Million Dollars ($2,000,000) per occurrence. If such CGL insurance contains a general aggregate limit, it shall separately apply to this Project. Such CGL insurance shall be on an occurrence basis.

B. CGL insurance shall be written on a comprehensive form and shall cover claims and liability in connection with or resulting from the Contractor's operations and activities under the Contract, for personal injuries, occupational sickness, disease, death or damage to property of others, including loss of use resulting therefrom, arising out of any operations or activities of the Contractor, its agents, or any Subcontractors of any tier or by anyone directly or indirectly employed by either of them.

C. CGL insurance shall include premises, operations, independent contractors, products-completed operations, personal injury and advertising injury and liability assumed under an insured contract (including the tort liability of another assumed in a business contract) coverages. In particular, and not by way of any limitation, the

CGL insurance shall cover the Contractor's deference and indemnity obligations contained in the Contract Documents.

D. There shall be no endorsement or modification of the CGL policy limiting the scope of coverage for liability arising from blasting, explosion, collapse, or underground property damage.

E. "The City of Grain Valley, Missouri" shall be endorsed as an "additional insured" under the CGL policy. In lieu of naming the City of Grain Valley, Missouri as an additional insured, under the CGL policy, Contractor may satisfy such requirement by purchasing and maintaining an Owner's and Contractor's Protective Liability policy on behalf of Owner, as named insured with limits as provided for in Paragraph 5.02 A. The CGL policy shall also contain a "Separation of Insureds" provision. If Contractor's CGL policy does not contain a "Separation of Insureds" provision, Contractor's CGL policy shall be endorsed to provide cross-liability coverage.

F. Contractor waives all rights against Owner and its agents, officers, representatives and employees for recovery of damages to the extent those damages are covered by the CGL policy required hereunder.

5.03 Automobile Liability

A. Contractor shall secure and maintain from the date of the Contract for Construction and for a period of at least two (2) years from the date of Final Completion of the entire Work, insurance, to be on comprehensive form, which shall protect Contractor against any and all claims for all injuries and all damage to property arising from the use of automobiles, trucks and motorized vehicles, in connection with the performance of Work under this Contract, and shall cover the operation on or off the site of the Work of all motor vehicles licensed for highway use whether they are owned, non-owned or hired. Such insurance shall include contractual liability coverage and shall provide coverage on the basis of the date of any accident. The liability limits under such policy shall not be less than Two Million Dollars ($2,000,000) combined single limit for bodily injury and property damage per accident. "The City of Grain Valley, Missouri" and "Tri-County Water Authority" shall be endorsed as an "additional insured" under the policy required by this Paragraph 5.03 A.

B. Contractor waives all rights against Owner and its agents, officers, directors and employees for recovery of damages to the extent such damages are covered by the automobile liability insurance required hereunder.

5.04 Workers' Compensation Insurance

A. Contractor shall purchase and maintain workers' compensation insurance and employers' liability insurance which shall protect Contractor from claims for injury, sickness, disease or death of Contractor's employees or statutory employees. The insurance policies required hereunder shall include an "all states" or "other states" endorsement. In case any Work is sublet, Contractor shall require any Subcontractor of any tier to provide the insurance coverages required under this Section 5.04.

B. Contractor's workers' compensation insurance coverage shall be in compliance with all applicable Laws, including the statutes of the State of Missouri. Contractor's employers' liability coverage limits shall not be less than $500,000 each accident for bodily injury by accident or $500,000 each employee for bodily injury by disease.

C. Contractor waives all rights against Owner and its agents, officers and directors and employees for recovery of damages to the extent these damages are covered by the workers' compensation and/or employers' liability insurance required hereunder.

5.05 Miscellaneous Liability Insurance

A. If required by the Supplementary Conditions, Contractor shall also secure and maintain Owner's and Contractor's Protective Liability insurance on behalf of Owner, as named insured, with a minimum limit of coverage as set forth in the Supplementary Conditions.

B. If the Work is to be performed in or adjacent to a railroad right-of-way or if required by the Supplementary Conditions, Contractor shall secure on behalf of such applicable railroad company, as named insured, railroad protective liability insurance with minimum liability limits set forth in the Supplementary Conditions. Such insurance shall protect and defend the railroad company against claims as a result of the operations of Contractor. This insurance shall be acceptable to the railroad and shall be maintained throughout the period when Contractor is working on or adjacent to property the railroad company has an interest. Contractor shall not enter upon the property the railroad company has an interest until such insurance is in effect.

C. Contractor shall also provide any type of insurance not described above which Contractor requires for its own protection or on account of any applicable Laws.

5.06 General Requirements For Liability Insurance Coverages

A. All insurance coverages required herein shall be provided by insurance companies that are duly licensed to conduct business in the State of Missouri as an admitted carrier. The form and content of all insurance coverages provided by Contractor are subject to the approval of Owner. All required coverages shall be obtained and paid for by Contractor. Any acceptance of the form, content or insurance company by Owner shall not relieve the Contractor from the obligation to provide the coverages required herein.

B. All insurance coverage procured by the Contractor shall be provided by insurance companies having policyholder ratings no lower than "A" and financial ratings not lower than "XII" in the Best's Insurance Guide, latest edition in effect as of the date of the Agreement, and subsequently in effect at the time of renewal of any policies required by the Contract Documents. Insurance coverages required hereunder shall not be subject to a deductible amount on a per-claim basis of more than $10,000.00 and shall not be subject to a per-occurrence deductible of more than $25,000.00. Insurance procured by Contractor covering the additional insureds shall be primary insurance and any insurance maintained by Owner shall be excess insurance.

C. All insurance required hereunder shall provide that the insurer's cost of providing the insureds a defense and appeal, including attorneys' fees, shall be supplementary and shall not be included as part of the policy limits but shall remain the insurer's separate responsibility. Contractor shall cause its insurance carriers to waive all rights of subrogation against the Owner and its officers, employees and agents.

D. The Contractor shall furnish the Owner with certificates, policies or binders which indicate the Contractor and Owner are covered by the required insurance showing the type, amount, class of operations covered, effective dates and date of expiration of policies. Such certificates, policies or binders shall be submitted to Owner within ten (10) days from the date Contractor receives notice of the award of the Contract. All certificates, policies and binders shall be executed by a duly authorized agent of each of the applicable insurance carriers and shall contain the statement that: "The insurance covered by this certificate will not be canceled or altered except after thirty (30) days' written notice has been received by Owner." All certificates, policies and binders shall be in a form acceptable to the Owner. Contractor shall provide certified copies of all insurance policies required above within ten (10) days of Owner's written request for said copies.

E. With respect to all insurance coverages required to remain in force and affect after final payment, Contractor shall provide Owner additional certificates, policies and binders evidencing continuation of such insurance coverages along with Contractor's application for final payment and shall provide certificates, policies and binders thereafter as requested by Owner.

F. The maintenance in full current force and effect of such forms and amounts of insurance and bonds required by the Contract Documents shall be a condition precedent to Contractor's exercise or enforcement of any rights under the Contract Documents.

G. Failure of Owner to demand certificates, policies and binders evidencing insurance coverages required by the Contract Documents, acceptance by Owner of such certificates, policies and binders or failure of Owner to identify a deficiency from evidence that is provided by Contractor shall not be construed as a waiver of Contractor's obligations to maintain the insurance required by the Contract Documents.

H. The Owner shall have the right to terminate the Contract if Contractor fails to maintain the insurance required by the Contract Documents.

I. If Contractor fails to maintain the insurance required by the Contract Document, Owner shall have the right, but not the obligation, to purchase said insurance at Contractor's expense. If Owner is damaged by Contractor's failure to maintain the insurance required by the Contract Documents, Contractor shall bear all reasonable costs properly attributable to such failure.

J. By requiring the insurance set forth herein and in the Contract Documents, Owner does not represent or warrant that coverage and limits will necessarily be adequate to protect Contractor, and such coverages and limits shall not be deemed as a limitation on Contractor's liability under the indemnities granted to Owner in the Contract Documents.

K. If Contractor's liability policies do not contain a standard separation of insureds provision, such policies shall be endorsed to provide cross-liability coverage.

L. If a part of the Work hereunder is to be sublet, the Contractor shall: (1) cover any and all Subcontractors in its insurance policies; (2) require each Subcontractor to secure insurance which will protect said Subcontractor and supplier against all applicable hazards or risks of loss designated in accordance with Article 5 hereunder; and (3) require each Subcontractor or supplier to assist in every manner possible in the reporting and

investigation of any accident, and upon request, to cooperate with any insurance carrier in the handling of any claim by securing and giving evidence and obtaining the attendance of witnesses as required by any claim or suit.

M. It is understood and agreed that the insurance coverages required by the provisions of this Article 5 are required in the public interest and that the Owner does not assume any liability for acts of Contractor or Subcontractors of any tier or their employees in the performance of the Contract or Work.

5.07 Property Insurance

A. The Contractor shall purchase and maintain, in a company or companies lawfully authorized to do business in the State of Missouri, as an admitted carrier, builder's risk insurance on the entire Work. Such insurance shall be written on a completed value form and in the amount of the initial Contract Price as well as subsequent modifications thereto for the entire Work. The insurance shall apply on a replacement cost basis.

B. The insurance as required in Paragraph 5.07 shall name as insureds the Owner, Contractor and all Subcontractors of any tier. The insurance policy shall contain a provision that the insurance will not be canceled, allowed to expire or materially changed until at least thirty (30) days prior written notice has been given to Owner.

C. The insurance as required in Paragraph 5.07 shall cover the entire Work, including reasonable compensation for Professional's services and expenses made necessary by an insured loss. Insured property shall include portions of the Work located away from the site but intended for use at the site, and shall also cover portions of the Work in transit, including ocean transit. The policy shall include as insured property scaffolding, falsework, and temporary buildings located at the site. The policy shall cover the cost of removing debris, including demolition as may be made legally necessary by the operation of any law, ordinance or regulation.

D. The insurance required by Paragraph 5.07 shall be on an all risk form and shall be written to cover all risks of physical loss or damage to the insured party and shall insure at least against the perils of fire and extended coverage, theft, vandalism, malicious mischief, collapse, lightening, earthquake, flood, frost, water damage, windstorm and freezing.

E. If there are any deductibles applicable to the insurance required by Paragraph 5.07, Contractor shall pay any part of any loss not covered because of the operation of such deductibles.

F. The insurance as required in Paragraph 5.07 shall be maintained in effect until the earliest of the following dates:

1. the date which all persons and organization who are insureds under the policy agree in writing that it shall be terminated;

2. the date on which final payment of this Contract has been made by Owner to Contractor; or

3. the date on which the insurable interests in the property of all insureds other than the Owner have ceased.

G. Contractor shall purchase and maintain boiler and machinery insurance required by the Supplementary Conditions, which shall specifically cover such insured objects during installation until final acceptance by the Owner. This insurance shall name as insureds Owner, Contractor and Subcontractors of any tier in such Work.

H. The Owner and Contractor waive all rights against (1) each other and any of their subcontractors of any tier, suppliers, agents and employees, each of the other, (2) the Professional and Professional's consultants, and (3) separate contractors described in Article 6, if any, and any of their subcontractors of any tier, suppliers, agents and employees, for damages caused by fire or other perils to the extent covered by property insurance obtained pursuant to this Section 5.07 or other insurance applicable to the Work, except such rights as they have to proceeds of such insurance. The Owner or Contractor, as appropriate, shall require of the Professional, Professional's consultants, separate contractors described in Article 7, if any, and the Subcontractors of any tier, Suppliers, agents and employees of any of them, by appropriate agreements, written where legally required for validity, similar waivers each in favor of other parties enumerated herein. The policies shall provide such waivers of subrogation by endorsement or otherwise. A waiver of subrogation shall be effective as to a person or entity even though that person or entity would otherwise have a duty of indemnification, contractual or otherwise, did not pay the insurance premium directly or indirectly, was at fault or was negligent in causing the loss and whether or not the person or entity had an interest in the property damaged.

I. A loss insured under Contractor's property insurance shall be adjusted by the Owner in good faith and made payable to the Owner for the insureds, subject to requirements of the Contract Documents. The Contractor shall pay Subcontractors of any tier their just shares of insurance proceeds received by the Contractor, and by appropriate agreements, written where legally required for validity, shall require Subcontractors of any tier to make payments to their Sub-subcontractors in similar manner.

J. Partial occupancy or use shall not commence until the insurance company or companies providing property insurance have consented to such partial occupancy or use by endorsement or otherwise. The Owner and the Contractor shall take reasonable steps to obtain consent of the insurance company or companies and shall, without mutual written consent, take no action with respect to partial occupancy or use that would cause cancellation, lapse or reduction of insurance.

5.08 Bonds

A. The Contractor shall procure and furnish a Performance and Payment Bond in the form prepared by the Owner, in an amount equal to one hundred percent (100%) of the Contract Price, as well as adjustments to the Contract Price. The Performance Bond shall secure and guarantee Contractor's faithful performance of this Contract, including but not limited to Contractor's obligation to correct defects after final payment has been made as required by the Contract Documents. The Payment Bond shall secure and guarantee payment of all persons performing labor on the Project under this Contract and furnishing materials in connection with this Contract. These Bonds shall be in effect through the duration of the Contract plus the Guarantee Period as required by the Contract Documents.

B. The bonds required hereunder shall be executed by a responsible surety licensed in the State of Missouri, with a Best's rating of no less than A/XII. The Contractor shall require the attorney in fact who executes the required bonds on behalf of the surety to affix thereto a certified and current copy of this power of attorney indicating the monetary limit of such power.

C. If the surety of any bond furnished by Contractor is declared bankrupt or becomes insolvent or its right to conduct business in the State of Missouri is terminated, or it ceases to meet the requirements of this paragraph, Contractor shall within ten (10) days substitute another bond and surety, both of which must be acceptable to Owner. If Contractor fails to make such substitution, Owner may procure such required bonds on behalf of Contractor at Contractor's expense.

D. Upon the request of any person or entity appearing to be a potential beneficiary of bonds covering payment of obligations arising under the Contract, the Contractor shall promptly furnish a copy of the bonds to such person or entity.

E. The Contractor shall keep the surety informed of the progress of the Work, and, where necessary, obtain the surety's consent to or waiver of: (1) notice of changes in the Work; (2) request for reduction or release of retention; (3) request for final payment; and (4) any other material required by the surety. The Owner shall be notified by the Contractor, in writing, of all communications with the surety. The Owner may, in the Owner's sole discretion, inform surety of the progress of the Work, any defects in the Work, or any defaults of Contractor under the Contract Documents and obtain consents as necessary to protect the Owner's rights, interest, privileges and benefits under and pursuant to any bond issued in connection with the Work.

F. Contractor shall indemnify and hold harmless the Owner and any agents, employees, representative or elected official of Owner from and against any claims, expenses, losses, costs, including reasonable attorneys' fees, as a result of any failure of Contractor to procure the bonds required by this Paragraph 5.08.

ARTICLE 6 - CONTRACTOR'S RESPONSIBILITY

6.01 General

A. The Contractor shall supervise and direct the Work, using the Contractor's best skill and attention. Contractor shall supervise and direct the Work competently and efficiently, devoting such attention thereto and applying such skills and expertise as may be necessary to perform the Work in accordance with the Contract Documents. Contractor shall be solely responsible for the means, methods, techniques, sequences and procedures of construction. Contractor shall be responsible to see that the finished Work strictly complies with the Contract Documents.

6.02 Supervision

A. The Contractor shall be solely responsible for and have control over construction means, methods, techniques, sequences, and procedures and for coordinating all portions of the Work under the Contract. The Contractor shall supply sufficient and competent supervision and personnel, and sufficient material, plant, and equipment to prosecute the Work with diligence to insure completion thereof within the time specified in the Contract Documents, and shall pay when due any laborer, Subcontractor of any tier, or supplier. Contractor shall keep on the Work at all times during its progress, a competent resident superintendent, who shall not be replaced without written notice to Owner and Professional except under extraordinary circumstances. The superintendent will be Contractor's representative at the Site and shall have authority to act on behalf of Contractor. All communications given to the superintendent shall be as binding as if given to Contractor.

6.03 Labor and Construction Procedures

A. Contractor shall provide competent, suitably qualified personnel to survey and lay out the Work and perform construction as required by the Contract Documents. Contractor shall at all times maintain good discipline and order at the site. Except in connection with the safety or protection of persons or the Work or property at the site or adjacent thereto, and except as otherwise indicated in the Contract Documents, all Work at the site shall be performed during regular working hours, and Contractor will not permit overtime work or the performance of the Work on Saturday, Sunday or any legal holiday without Owner's written consent given after prior written notice to Professional.

B. The Contractor shall only employ labor on the Project or in connection with the Work capable of working harmoniously with all trades, crafts and any other individuals associated with the Project. The Contractor shall take all measures to minimize the likelihood of any strike, work stoppage or other labor disturbance. If the Work is to be performed by trade unions, the Contractor shall make all necessary arrangements to reconcile, without delay, damage or cost to the Owner and without recourse to the Professional or Owner, any conflict between the Contract Documents and any agreements or regulations of any kind at any time in force among members or councils which regulate or distinguish what activities shall not be included in the Work of any particular trade. In case the progress of the Work is affected by any undue delay in furnishing or installing any items or materials or equipment required under the Contract Document because of such conflict involving any such labor agreement or regulation, the Owner may require that other material or equipment of equal kind and quality be provided pursuant to a Change Order or Work Change Directive. Notwithstanding any other provision contained herein and superseding any contrary term expressed herein or in any of the Contract Documents, Contractor agrees that in the event of any strike, picket, sympathy strike, work stoppage, or other form of labor dispute (collectively referred to as “Disruption”) at the Project site, whether that Disruption is in connection with Contractor, a Subcontractor of any tier, the Owner or any other contractor, subcontractor or supplier on this Project site, Contractor will continue to perform the Work required herein without interruption or delay. In the event Contractor fails to continue the performance of the Work included herein, without interruption or delay, because of such Disruption or other form of labor dispute, the Owner may terminate the services of Contractor after giving forty-eight (48) hours written notice of an intent to do so, or the Owner may invoke any of the rights set forth in the Contract Documents. Contractor expressly waives the right to any extension of time for any delay that may occur as the result of any Disruption, strike, picket, sympathy strike, work stoppage or other form of labor dispute at the Project site. Whenever Contractor has knowledge that any actual or potential Disruption or labor dispute is delaying or threatens to delay the timely performance of the Project, Contractor shall immediately notify Owner in writing.

C. The Contractor shall establish and maintain a permanent bench-mark to which access may be had during progress of the Work, and Contractor shall establish all lines and levels, and shall be responsible for the correctness of such. Contractor shall protect the established benchmarks and horizontal and vertical control points. Benchmarks and control points destroyed or that require relocation because of necessary construction activities shall be immediately reported to Professional. Contractor shall be fully responsible for all layout work for the proper location of Work in strict accordance with the Contract Documents. The Contractor shall establish and maintain alignment and grades, including the setting of all stakes, ranges, grid lines and other appurtenance facilities. Contractor shall carefully protect and maintain such stakes and keep the same uncovered for examination during the progress of the Work. Before starting construction on the site, the Contractor shall provide written assurances certifying that the monuments or markers which delineate the site boundaries are placed in the correct position and that the proposed new construction and site development work, as staked-out by the Contractor, are wholly within the limits of the Owner’s ownership, leasehold or right-of-way. Contractor shall be responsible for the accurate replacement of any boundary markers which are disturbed, removed or destroyed during the performance of the Work.

D. The Contractor shall be responsible for the layout of the Work in the proper location and for any damage which may occur to the Work or the work of separate contractors, because of errors or inaccuracies in the layout of the Work.

E. The Contractor shall be responsible for the shoring required to protect its work or adjacent property and shall pay for any damage caused by failure to shore or by improper shoring or by failure to give proper notice. Shoring shall be removed only after completion of permanent supports.

F. During the performance of the Work, the Contractor shall be responsible for providing and maintaining warning signs, lights, signal devices, barricades, guard rails, fences, and other devices appropriately located on site which shall give proper and understandable warning to all persons of danger of entry onto land, structure, or equipment.

G. The Contractor shall be responsible for care of the Work and must protect same from damage or defacement until acceptance by the Owner. All damaged or defaced Work shall be repaired or replaced to the Owner's satisfaction, without cost to the Owner.

H. When requested by the Contractor, at no extra charge, shall provide scaffolds or ladders in place as may be required by the Professional or the Owner for examination of Work in progress or completed.

I. The Contractor shall coordinate all Work so there shall be no prolonged interruption of existing utilities, systems and equipment of Owner. Any existing plumbing, heating, ventilating, air conditioning, or electrical disconnection necessary, which affect portions of construction or building of the Project or any other building, must be scheduled with the Owner and Professional to avoid any disruption of operation within the building under construction or other buildings or utilities. In no case shall utilities be left disconnected at the end of a work day or over a weekend. Any interruption of utilities, either intentionally or accidentally, shall not relieve the Contractor from repairing and restoring the utility to normal service. Repairs and restoration shall be made before the workers responsible for the repair and restoration leave the job.

J. The Contractor shall pump, bail, or otherwise keep any general excavations free of water. The Contractor shall keep all areas free of water before, during and after concrete placement.

K. The Contractor shall ensure that the Work is at all times performed in a manner that affords reasonable access, both vehicular and pedestrian, to the site of the Work and all adjacent areas. The Work shall be performed, to the fullest extent reasonably possible, in such a manner that public areas adjacent to the site of the Work shall be free from all debris, building materials and equipment likely to cause hazardous conditions. Without limitation of any other provision of the Contract Documents, Contractor shall not interfere with the occupancy or beneficial use of (1) any areas and buildings adjacent to the site of the Work or (2) the Work in the event of partial occupancy. Contractor shall assume full responsibility for any damage to the property comprising the Project or to the owner or occupant of any adjacent land or areas resulting from the performance of the Work.

L. Contractor shall, and in accordance with any regulations or site rules presented by the Owner use only designated site entrances and roadways or use temporary entrances and roadways constructed by Contractor.

M. The Contractor shall not permit any workers to use any existing facilities at the Project site, including, without limitation, lavatories, toilets, entrances and parking areas other than those designated by Owner. The Contractor, Subcontractors of any tier, suppliers and employees shall comply with instructions or regulations of the Owner and Professional governing access to, operation of, and conduct while in or on the premises and shall perform all Work required under the Contract Documents in such a manner as not to unreasonably interrupt or interfere with the conduct of Owner's operations. Any request for Work, a suspension of Work or any other request or directive received by the Contractor from occupants of existing buildings shall be referred to the Professional for determination.

N. The Contractor shall take field measurements and verify field conditions and shall carefully compare such field measurements and conditions and other information known to the Contractor with the Contract Documents before commencing activities. Errors, inconsistencies or omissions discovered shall be reported in writing to the Professional and Owner within twenty-four (24) hours. During the progress of Work, Contractor shall verify all field measurements prior to fabrication of building components or equipment, and proceed with the fabrication to meet field conditions. Contractor shall consult all Contract Documents to determine the exact location of all Work and verify spatial relationships of all Work. Any question concerning said location or spatial relationships shall be submitted to the Professional. Specific locations for equipment, pipelines, ductwork and other such items of Work, where not dimensioned on plans, shall be determined in consultation with Professional. Contractor shall be responsible for the proper fitting of the Work in place. The exactness of grades, elevations, dimensions, or locations given on any Drawings issued by the Professional, or the work installed by separate contractors, is not guaranteed by the Professional or the Owner. The Contractor shall, therefore, satisfy itself as to the accuracy of all grades, elevations, dimensions and locations. In all cases of interconnection of its Work with existing or other work, Contractor shall verify at the site all dimensions relating to such existing or other work. Any errors due to the Contractor's failure to so verify all such grades, elevations, locations or dimensions shall be promptly rectified by the Contractor without any additional cost to the Owner.

O. The Contractor shall be responsible for inspection of portions of the Work already performed under this Contract to determine that such portions are in proper condition to receive subsequent Work.

P. Before ordering any materials or doing any Work, the Contractor and each Subcontractor shall verify measurements at the Project site and shall be responsible for the correctness of such measurements. No extra charge or compensation will be allowed on account of differences between actual dimensions and the dimensions indicated on the Drawings. Any difference which may be found shall be submitted to the Professional for resolution before proceeding with the Work. If a minor change in the Work is found to be necessary due to actual field

conditions, the Contractor shall submit detailed drawings of such departure for the approval by the Professional before making the change.

6.04 Materials and Equipment

A. Contractor shall furnish and assume full responsibility for all materials, equipment, labor, transportation, construction equipment and machinery, tools, appliances, fuel, power, light, heat, telephone, water, sanitary facilities, temporary facilities and all other facilities and incidentals necessary for the furnishing, performance, testing, start-up and completion of the Work.

B. Unless otherwise specifically noted, the Contractor shall provide and pay for supervision, labor, materials, equipment, tools, construction equipment and machinery, water, heat, utilities, transportation, and other facilities and services necessary for the proper execution and completion of the Work, whether temporary or permanent and whether or not incorporated in the Work. Contractor shall arrange for and pay all fees and charges for installation of motors and other devices and connection to existing outside services and utilities necessary for the Work. Contractor shall pay for bills for utilities for the Contractor's use and consumption of utilities until the date of Substantial Completion. Contractor, unless otherwise provided for in the Special Conditions, shall provide an office and maintain the office for use by Contractor, Professional and Owner. The office shall be removed when directed by Owner. Contractor shall provide heat, air conditioning, ventilation, other environmental controls and shall take all actions necessary to protect all Work, materials and equipment against injury, damage or loss from theft, weather, vandalism, wetness, temperature and humidity conditions, dust and other adverse environmental conditions.

6.05 Quality of Materials and Equipment

A. All materials and equipment shall be of good quality and new, except as otherwise provided in the Contract Documents. If required by Professional, Contractor shall furnish satisfactory evidence (including reports of required tests) as to the kind and quality of materials and equipment. All materials and equipment shall be applied, installed, connected, erected, used, cleaned and conditioned in accordance with the instructions of the applicable Supplier except as otherwise provided in the Contract Documents. No provision of any such instructions will be effective to assign to Professional, Owner or any of Professional's or Owner's consultants, agents or employees, any duty or authority to supervise or direct the furnishing or performance of the Work.

B. Materials and workmanship shall be subject to inspection, examination, and test by the Professional at any and all times during manufacture, installation and construction of any of them, at places where such manufacture, installation or construction is performed.

6.06 Schedule

A. Contractor shall submit to Professional for acceptance adjustments in the progress schedule to reflect the impact thereon of new developments. These will conform generally to the progress schedule then in effect and additionally will comply with any provisions of the General Requirements applicable thereto. The submission or acceptance of such schedules shall not change or modify the Contract Times. Adjustments in the progress schedule that will change the Contract Times or Milestones shall be submitted in accordance with Article 12. An adjustment in the Contract Times or Milestones may only be made by Change Order in accordance with Article 12 regardless of the submission of a progress schedule or acceptance of such schedule.

B. The Contractor shall monitor the progress of the Work for conformance with the requirements of the most recently approved schedule and shall promptly advise the Owner of any delays or potential delays. The accepted construction schedule shall be updated to reflect actual conditions. Contractor shall submit written progress reports and updated schedules to Professional and Owner with each Application for Payment showing actual progress of the Work compared with the scheduled and planned progress. In the event any schedule or progress report indicates any delays, the Contractor shall propose an affirmative plan to correct the delay, including overtime and/or additional labor and equipment and/or expediting delivery of materials, if necessary. In no event shall any progress report or construction schedule constitute an adjustment in the Contract Times, any Milestone Date or the Contract Price unless any such adjustment is agreed to by the Owner and authorized pursuant to Change Order.

C. In the event the Owner or Professional determines that the performance of the Work, as of a Milestone Date, has not progressed or reached the level of completion required by the Contract Documents, the Owner shall have the right to order the Contractor to take corrective measures necessary to expedite the progress of construction, including, without limitation, (1) working additional shifts or overtime, (2) supplying additional manpower, equipment, facilities, (3) expediting delivery of materials, and (4) other similar measures (hereinafter referred to collectively as Extraordinary Measures). Such Extraordinary Measures shall continue until the progress of the Work complies with the stage of completion required by the Contract Documents. The Owner's right to require Extraordinary Measures is solely for the purpose of ensuring the Contractor's compliance with the construction schedule. The Contractor shall not be entitled to an adjustment in the Contract Price in connection with Extraordinary Measures required by the

Owner under or pursuant to this Paragraph 6.06 C. The Owner may exercise the rights furnished the Owner under or pursuant to this Paragraph 6.06 C. as frequently as the Owner deems necessary to ensure that the Contractor's performance of the Work will comply with any Milestone Date or completion date set forth in the Contract Documents.

6.07 "Or-Equal" Items

A. Whenever materials or equipment are specified or described in the Contract Documents by using the name of a proprietary item or the name of a particular Supplier the naming of the item is intended to establish the type, function and quality required. Unless the name is followed by words indicating that no substitution is permitted, materials or equipment of other Suppliers may be accepted by Professional if it is proven as set forth in this Section 6.07 that the material or equipment proposed is equivalent or equal to that named.

B. The standard products of manufacturers other than those specified will be accepted when, prior to the ordering or use thereof, it is proven to the satisfaction of the Professional that such products are equal in design, appearance, spare parts availability, strength, durability, usefulness, serviceability, operation cost, maintenance cost, and convenience for the purpose intended. Any general listings of approved manufacturers in any Contract Document shall be for informational purposes only and it shall be the Contractor's sole responsibility to ensure that any proposed "or equal" complies with the requirements of the Contract Documents.

C. In the event that Contractor desires to propose an "or equal" of any article, appliance, devise or material, Contractor shall submit a written list of all proposed or equals that Contractor proposes to provide to the Professional and within ten (10) days from the execution of the Agreement. Within ten (10) days from the execution of the Agreement, the Contractor shall submit to Professional and a written and full description of the proposed "or equal" including all supporting data, including technical information, catalog cuts, warranties, test results, installation instructions, operating procedures, and similar information demonstrating that the proposed "or equal" strictly complies with the Contract Documents. The Professional shall take appropriate action with respect to the submission of a proposed "or equal" item. If Contractor fails to submit proposed "or equals" as set forth herein, it shall waive any right to supply such items. The Contract Price and Contract Times shall not be adjusted as a result of any failure by Contractor to submit proposed "or equals" as provided for herein. All documents submitted in connection with preparing an "or equal" shall be clearly and obviously marked as a proposed "or equal" submission.

D. No "or equal" items shall be installed or utilized until Professional's review is complete and approved in writing. No approvals or action taken by the Professional or shall relieve Contractor from its obligation to ensure that an "or equal" article, appliance, devise or material strictly complies with the requirements of the Contract Documents. Contractor shall not propose "or equal" items in connection with Shop Drawings or other Submittals, and Contractor acknowledges and agrees that no approvals or action taken by the Professional or with respect to Shop Drawings or other Submittals shall constitute approval of any "or equal" item or relieve Contractor from its sole and exclusive responsibility. Any changes required in the details and dimensions indicated in the Contract Documents for the incorporation or installation of any "or equal" item supplied by Contractor shall be properly made and approved by the Professional at the expense of the Contractor. No "or equal" items will be permitted for components of or extensions to existing systems when, in the opinion of the Professional, the named manufacturer must be provided in order to insure compatibility with the existing systems, including, but not limited to, mechanical systems, electrical systems, fire alarms, smoke detectors, etc. No action will be taken by the Professional with respect to proposed "or equal" items prior to receipt of bids, unless otherwise noted in the Supplementary Conditions.

6.08 Substitutions

A. If, after execution of the Contract or prior to submittal of applicable Shop Drawings, the Contractor desires to submit an alternate product or method in lieu of what has been specified or shown in the Contract Documents, which is not an "or equal" as set forth in Section 6.07, the Contractor may do so in writing and setting forth the following:

1. Full explanation of the proposed substitution and submittal of all supporting data including technical information, catalog cuts, warranties, test results, installation instructions, operating procedures, and other like information necessary for a complete evaluation of the substitution.

2. Reasons the substitution is advantageous and necessary, including the benefits to the Owner and the Work in the event the substitution is acceptable.

3. The adjustment, if any, in the Contract Price, in the event the substitution is acceptable.

4. The adjustment, if any, in the time of completion of the Contract and the construction schedule in the event the substitution is acceptable.

5. An affidavit stating that (a) the proposed substitution conforms to and meets all of the Contract Documents, except as specifically disclosed and set forth in the affidavit and (b) the Contractor accepts the

warranty and correction obligations in connection with the proposed substitution as if originally specified by the Professional. Proposals for substitutions shall be submitted to the Professional and in sufficient time to allow the Professional and no less than ten (10) working days for review. No substitution will be considered or allowed without the Contractor's submittal of complete substantiating data and information as stated herein.

B. Substitutions and alternates may be rejected without explanation in Owner's sole discretion and will be considered only under one or more of the following conditions:

1. Required for compliance with interpretation of code requirements or insurance regulations then existing;

2. Unavailability of specified products, through no fault of the Contractor;

3. Material delivered fails to comply with the Contract Documents;

4. Subsequent information discloses inability of specified products to perform properly or to fit in designated space;

5. Manufacturer/fabricator refuses to certify or guarantee performance of specified product as required; or

6. When in the judgment of the Owner or the Professional, a substitution would be substantially to the Owner's best interests, in terms of cost, time, or other considerations.

C. Professional and Owner shall be allowed a reasonable time to evaluate each substitute proposed. No substitute will be ordered, included or utilized until Professional's review is complete and approved, which will be evidenced by a Change Order. Owner may require Contractor to furnish at Contractor's expense a special performance guarantee or other guaranty with respect to any substitution. Whether or not any proposed substitution is accepted by the Owner or the Professional, the Contractor shall reimburse the Owner for any fees charged by the Professional or other consultants for evaluating each proposed substitute.

6.09 Concerning Subcontractors, Suppliers and Others

A. Contractor shall not employ any Subcontractor, Supplier or other person or organization whether initially or as a substitute, against whom Owner or Professional may have reasonable objection. Contractor shall not be required to employ any Subcontractor, Supplier or other person or organization to furnish or perform any of the Work against whom Contractor has reasonable objection.

B. If the Supplementary Conditions require the identity of certain Subcontractors, Suppliers or other persons or organizations (including those who are to furnish the principal items of materials and equipment) to be submitted to Owner in advance of the specified date prior to the Effective Date of the Agreement for acceptance by Owner and Professional and if Contractor has submitted a list thereof in accordance with the Supplementary Conditions, Owner's or Professional's acceptance (either in writing or by failing to make written objection thereto by the date indicated for acceptance or objection in the bidding documents or the Contract Documents) of any such Subcontractor, Supplier or other person or organization so identified may be revoked on the basis of reasonable objection after due investigation, in which case Contractor shall submit an acceptable substitute The Contract Price shall be increased by the difference between the subcontract amount proposed by the person or entity recommended by the Contractor and the subcontract amount proposed by the person or entity to whom the Owner has no objection. However, no increase in the Contract Price shall be allowed unless the Contractor has acted promptly and responsively in complying with the provisions of Paragraph 6.09 B and the person or entity to which Owner has an objection is capable of performing the Work. No acceptance by Owner or Professional of any such Subcontractor, Supplier or other person or organization shall constitute a waiver of any right of Owner or Professional to reject defective Work.

C. Each subcontract agreement for a portion of the Work is assigned by the Contractor to the Owner provided that:

1. assignment is effective only after termination of the Contract by the Owner for cause pursuant to Paragraph 15.01 and only for those subcontract agreements which the Owner accepts by notifying the Subcontractor in writing; and

2. assignment is subject to the prior rights of the surety, if any, obligated under bond relating to the Contract.

Each subcontract shall specifically provide that the Owner shall only be responsible to the Subcontractor for those obligations of the Contractor that accrue subsequent to the Owner's exercise of any rights under this conditional assignment.

D. Contractor shall be fully responsible to Owner and Professional for all acts and omissions of the Subcontractors, Suppliers and other persons and organizations performing or furnishing any of the Work under a direct or indirect contract with Contractor just as Contractor is responsible for Contractor's own acts and omissions. Nothing in the Contract Documents shall create any contractual relationship between Owner or Professional and any such Subcontractor, Supplier or other person or organization, nor shall it create any obligation on the part of Owner or Professional to pay or to see to the payment of any moneys due any such Subcontractor, Supplier or other person or organization except as may otherwise be required by Laws and Regulations.

E. The divisions and sections of the Specifications and the identifications of any Drawings shall not control the Contractor in dividing the Work among Subcontractors or Suppliers or delineating the Work to be performed by any specific trade.

F. All Work performed for Contractor by a Subcontractor will be pursuant to an appropriate agreement between Contractor and the Subcontractor which specifically binds the Subcontractor to the applicable terms and conditions of the Contract Documents for the benefit of Owner and Professional and contains waiver provisions as required by Section 5.07. Contractor shall pay each Subcontractor a just share of any insurance moneys received by Contractor on account of losses under policies issued pursuant Section 5.07.

G. Contractor shall perform with its own forces and organization Work amounting to not less than thirty percent (30%) (or a greater percentage if required by the Supplementary Conditions) of the original Contract Price.

6.10 Patent Fees and Royalties

A. Contractor shall pay all license fees and royalties and assume all costs incident to the use in the performance of the Work or the incorporation in the Work of any invention, design, process, product or device which is the subject of patent rights or copyrights held by others. If a particular invention, design, process, product or device is specified in the Contract Documents for use in the performance of the Work and if to the actual knowledge of Owner or Professional its use is subject to patent right or copyrights calling for the payment of any license fee or royalty to others, the existence of such rights shall be disclosed by Owner in the Contract Documents. Contractor shall defend, indemnify and hold harmless Owner and Professional and anyone directly or indirectly employed by either of them from and against all claims, damages, losses and expenses (including attorney's fees and court and arbitration costs) arising out of any infringement of patent rights or copyrights incident to the use in the performance of the Work of any invention, design, process, product or device not specified in the Contract Documents, and shall defend all such claims in connection with any alleged infringement of such rights.

6.11 Permits and Fees

A. Contractor shall pay all governmental charges and inspection fees necessary for the prosecution of the work, which are applicable at the time of opening of Bids, or if there are no Bids on the Effective Date of the Agreement, Contractor shall pay all governmental charges and inspection fees necessary for the completion of the Work, which are applicable at the time of opening of Bids. Contractor shall pay all charges or assessments of utility owners for connections of utilities to the Work.

B. Contractor shall procure and obtain all bonds required of the Owner or the Contractor by the municipality in which the Project is located or any other public or private body with jurisdiction over the Project. In connection with such bonds, the Contractor shall prepare all applications, supply all necessary backup material, and furnish the surety with any required personal undertakings. Contractor shall also obtain and pay all charges for all approvals for street closings, parking meter removal, and other similar matters as may be necessary or appropriate from time to time for the performance of the Work.

6.12 Laws and Regulations

A. Contractor shall give all notices and comply with all Laws and Regulations applicable to furnishing and performance of the Work. Except where otherwise expressly required by applicable Laws and Regulations, neither Owner nor Professional shall be responsible for monitoring Contractor’s compliance with any Laws or Regulations.

B. If Contractor observes that the Specifications or Drawings are at variance with any Laws or Regulations, Contractor shall give Professional prompt written notice thereof. If Contractor performs any Work knowing or having reason to know that it is contrary to such Laws or Regulations, and without such notice to Professional, Contractor shall bear all costs arising therefrom; however, it shall not be Contractor’s primary responsibility to make certain that the Specifications and Drawings are in accordance with such Laws and Regulations.

6.13 Prevailing Wage Rates

A. This Contract shall be based upon payment by the Contractor and his Subcontractors of wage rates not less than the prevailing hourly wage rate for each craft or classification of workman engaged on the Work as determined by the Labor and Industrial Relations Commission of Missouri on behalf of the Department of Labor and

Industrial Relations. The Contractor shall comply with all requirements of the prevailing wage law of Missouri, RSMo. §§ 290.210 to 290.340, including the latest amendments thereto. The Contractor and each Subcontractor shall keep an accurate record showing the names, occupations, and crafts of all workmen employed, together with the number of hours worked by each workman and the actual wages paid to each workman. At all reasonable hours, such records shall be open to inspection by the representatives of the Labor and Industrial Relations Commission of Missouri and Owner. The payroll records shall not be destroyed or removed from the state for at least two (2) years after completion of the Work. Throughout the life of this Contract, a copy of the wage determination and the rules promulgated by the Labor and Industrial Relations Commission of Missouri shall be displayed in at least four (4) conspicuous places on the Project under a heading of NOTICE, with the heading in letters at least one (1) inch high. Pursuant to RSMo. § 290.250, the Contractor shall forfeit to Owner as a penalty, One hundred Dollars ($100.00) for each workman employed, for each calendar day, or portion thereof, such workman is paid less than the stipulated rates for any work done under the Contract, by him or by any Subcontractor under him. After completion of the Work, and before final payment can be made under this Contract, the Contractor and each Subcontractor must file with Owner an affidavit of compliance stating that he has fully complied with the provisions and requirements of the prevailing wage law of Missouri. During the life of this Contract, the prevailing hourly rate of wages is subject to change by the Department of Labor and Industrial Relations or by court decision, as provided by law. Any such change shall not be the basis of any claim by the Contractor against Owner, nor will deductions be made by Owner against sums due the Contractor by reason of any such change.

B. If a federal governmental agency is providing funding for the Project and if required by Division 1 of the Specifications or the Contract Documents, the Contractor agrees to pay prevailing hourly rate of wages for regular, holiday and overtime work as determined by the Secretary of Labor in accordance with the Davis-Bacon Act as amended and supplemented. The Contractor further agrees to comply with all applicable federal laws, statutes and regulations relating to and establishing prevailing wage rates. Where Missouri and Federal prevailing wage rates are applicable, the higher of the two will be paid by the Contractor.

C. Violations of the Missouri prevailing wage statute, whether by the Contractor or its Subcontractors, result in additional costs for Owner, including, but not limited to, costs of construction delays, of additional work for City staff, of added interest expense, of legal and litigation expense, and of delays in the levying of special assessments. The Contractor shall ensure that prevailing wage rates are paid and that Work is done by the correct category of worker both on this Contract and on all subcontracts. The cost to Owner of any particular violation is difficult to establish; in the event of the failure by the Contractor or any of its Subcontractors to pay wages as provided in the Missouri prevailing wage Laws, Owner may deduct from the price specified in the Contract and may retain as liquidated damages, and not as a penalty, Thirty-Five Dollars ($35.00) per day per individual who is paid less than the prevailing wage, to approximate the investigative costs resulting to Owner from such violations. To approximate the cost of delay, including interest expense from delay in levying special assessments and issuing special assessment tax bills, additional liquidated damages, and not as a penalty, shall be paid in the amount of One Hundred Dollars ($100.00) per day for any delay in closing out the Contract occasioned by failure to pay the prevailing wage. Such additional sum shall be collected, whether or not the work days on the Contract could be closed out. Action under this section shall be commenced by Owner giving a written notice to the Contractor. The notice shall set out the persons who are claimed to have been underpaid, and the days they are claimed to have been underpaid. The Contractor shall have ten (10) days, or such longer time as Owner shall allow, to respond to the allegation. Based on the information in the notice, the response by the Contractor and such additional information as Owner shall determine, Owner shall render its decision, in writing, giving the amount of liquidated damages owed, including any damages for occasioning a delay in closing out the Contract. The Contractor shall not be required to pay liquidated damages for any false or malicious claims. This liquidated damage will be in addition to the liquidated damages specified in the Agreement.

6.14 Taxes

A. Contractor shall pay all sales, consumer, use and other similar taxes required to be paid by Contractor in accordance with the Laws and Regulations of the place of the Project which are applicable during the performance of the Work. However, certain purchases by the Contractor of materials incorporated in or consumed in the construction of the Project are exempt from certain sales taxes pursuant to RSMo 144.062. The Contractor shall be issued a Project Tax Exemption Certificate for this Project to obtain the benefits of RSMo 144.062.

B. The Contractor shall furnish this certificate to all Subcontractors, and any person or entity purchasing materials for the Work shall present such certificate to all material suppliers as authorization to purchase, on behalf of the Owner, all tangible personal property and materials to be incorporated into or consumed in the Project and no other project on a tax-exempt basis. Such suppliers shall provide the purchasing party invoices bearing the name of the exempt entity and the Project identification number. Nothing in this section shall be deemed to exempt from any sales or similar tax the purchase of any construction machinery, equipment or tools used in construction, repairing or remodeling facilities for the Owner. All invoices for all personal property and materials purchased under a Project Tax

Exemption Certificate shall be obtained and retained by the Contractor for a period of five years and shall be subject to audit by the director of revenue.

C. Any excess resalable tangible personal property or materials which were purchased for the Project under this Project Tax Exemption Certificate but which were not incorporated into or consumed in the construction of the Project shall either be returned to the supplier for credit or the appropriate sales or use tax on such excess property or materials shall be reported on applicable tax returns and paid by such purchasing party not later than the due date of the purchasing party's Missouri sales or use tax return following the month in which it was determined that the materials were not used in the Project.

D. If it is determined that sales tax is owed by the Contractor on property and materials due to the failure of the Owner to revise the certificate expiration date to cover the applicable date of purchase, Owner shall be liable for the tax owed.

E. The Owner shall not be responsible for any tax liability due to Contractor's neglect to make timely orders, payments, etc. or Contractor's misuse of the Project Tax Exemption Certificate. Contractor represents that the Project Tax Exemption Certificate shall be used in accordance with RSMo § 144.062 and the terms of the Project Tax Exemption Certificate. Contractor shall defend and indemnify the Owner for any loss or expense, including but not limited to, reasonable attorneys' fees, arising out of Contractor's use of the Project Tax Exemption Certificate.

6.15 Use of Premises

A. Contractor shall confine construction equipment, the storage of materials and equipment and the operations of workers to the Project site, land and areas identified in and permitted by the Contract Documents and other land and areas permitted by Laws and Regulations, rights-of-way, permits and easements, and shall not unreasonably encumber the premises with construction equipment or other materials or equipment.

B. Contractor shall assume full responsibility for any damage to any such land or area, or to the owner or occupant thereof of any land or area, or to the owner or occupant thereof of any land or areas contiguous thereto, resulting from the performance of the Work. Should any such owner or occupant because of the performance of the Work make any claim against Owner or Professional, Contractor shall promptly attempt to settle with such other party by agreement or otherwise resolve the claim by arbitration or by law.

C. Contractor shall, to the fullest extent permitted by Laws and Regulations, indemnify and hold Owner and Professional harmless from and against all claims, damages, losses and expenses (including, but not limited to, fees of engineers, Professionals, attorneys and other professionals and court and arbitration's costs) arising directly, indirectly or consequentially out of any action, legal or equitable, brought by any such other party against Owner or Professional to the extent based on a claim arising out of Contractor's performance of the work.

6.16 Site Cleanup

A. During the progress of the Work, Contractor shall keep the premises free from accumulations of waste materials, rubbish and other debris resulting from the Work. At the completion of the Work Contractor shall remove all waste materials, rubbish and debris from and about the premises as well as all tools, appliances, construction equipment and machinery, and surplus materials, and shall leave the site clean and ready for occupancy by Owner. Contractor shall restore to original condition all property whether or not designated for alteration by the Contract Documents.

6.17 Loading of Structures

A. Contractor shall not load nor permit any part of any structure to be loaded in any manner that will endanger the structure, nor shall Contractor subject any part of the Work or adjacent property to stresses or pressures that will endanger it.

6.18 Record Documents

A. Contractor shall maintain in a safe place at the site one record copy of all Drawings, Specifications, Addenda, Written Amendments, Change Orders, Work Directive Changes, Field Orders and written interpretations and clarifications in good order and annotated to show all changes made during construction. These record documents together with all approved samples, Submittals and a counterpart of all approved Shop Drawings will be available to Professional for reference. Upon completion of the Work and prior to final payment, these record documents, samples, Shop Drawings and Submittals will be delivered to Professional for Owner.

6.19 Safety and Protection

A. Contractor shall be solely responsible for initiating, maintaining and supervising all safety precautions and programs in connection with the work. Contractor shall take all necessary precautions for the safety of, and provide the necessary protection to prevent damage, injury or loss to:

1. all employees on the Work and other persons and organizations who may be affected thereby;

2. all the Work and materials and equipment to be incorporated therein, whether in storage on or off the site; and

3. other property at the site or adjacent thereto, including trees, shrubs, lawns, walks, pavements, roadways, structures, utilities and Underground Facilities not designated for removal, relocation or replacement in the course of construction.

4. Contractor shall comply with all applicable Laws and Regulations of any public body having jurisdiction for the safety of persons or property or to protect them from damage, injury or loss; and shall erect and maintain all necessary safeguards for such safety and protection. Contractor shall notify owners of adjacent property and of Underground Facilities and utility owners when prosecution of the Work may affect them, and shall cooperate with them in the protection, removal, relocation and replacement of their property.

B. All damage, injury or loss to any property referred to in Paragraph 6.19 A.2. and 6.19 A.3. caused, directly or indirectly, in whole or in part, by Contractor, any Subcontractor, Supplier or any other person or organization directly or indirectly employed by any of them to perform or furnish any of the Work or anyone for whose acts any of them may be liable, shall be remedied by Contractor (except damage or loss solely attributable to the fault of Owner or Professional or anyone employed by either of them or anyone for whose acts either of them may be liable, and not attributable, directly or indirectly, in whole or in part, to the fault or negligence of Contractor).

C. The Contractor shall be solely responsible for materials delivered and Work performed until completion and final acceptance of the entire construction thereof. The Contractor shall bear the risk of injury, loss or damage to any and all parts of the Work for whatever cause, whether arising from the execution or from the non-execution of Work. The Contractor shall promptly rebuild, repair or restore Work and materials which have been damaged or destroyed from any causes before Final Completion, and shall bear the expense thereof. The Contractor shall provide security and drainage and erect temporary structures as necessary to protect the Work and materials from damage, including damage from water, flooding, wetness, temperature, dust, environmental conditions and all reasonably anticipated risks. The Contractor shall be responsible for materials not delivered to the Work site for which any progress payment has been made to the same extent as if the materials were so delivered.

6.20 Safety Representative

A. Contractor shall designate a responsible representative at the site whose duty shall be the prevention of accidents. This person shall be Contractor's superintendent unless otherwise designated in writing by Contractor to Owner.

6.21 Emergencies

A. In emergencies affecting the safety or protection of persons or the Work or property at the site or adjacent thereto, Contractor, without special instruction or authorization from Professional or Owner, is obligated to act to prevent threatened damage, injury or loss. Contractor shall give Professional prompt written notice if Contractor believes that any significant changes in the Work or variations from the Contract Documents have been caused thereby. If Professional determines that a change in the Contract Documents is required because of the action taken in response to an emergency, a Work Directive Change or Change Order will be issued to document the consequences of the changes or variations.

6.22 Submittals

A. Shop Drawings, Product Data, Samples and similar submittals (collectively referred to as “Submittals”) are not Contract Documents. The purpose of their submittal is to demonstrate for those portions of the Work for which Submittals are required the way the Contractor proposes to conform to the information given and the design concept expressed in the Contract Documents.

B. After checking and verifying all field measurements and after complying with applicable procedures specified in the Contract Documents, Contractor shall submit to Professional for review and approval in accordance with the accepted schedule of Submittals, or for other appropriate action if so indicated in the Supplementary Conditions, five (5) copies (unless otherwise specified in the General Requirements) of all Shop Drawings, which will bear a stamp or specific written indication that Contractor has satisfied Contractor's responsibilities under the

Contract Documents with respect to the review of the submission. All submissions will be identified as Professional may require for tracking. The data shown on the Shop Drawings will be complete with respect to quantities, dimensions, specified performance and design criteria, materials and similar data to enable Professional to review the information as required.

C. Contractor shall also submit to Professional for review and approval, with such promptness as to cause no delay in Work, all Samples, Product Data and other similar Submittals required by the Contract Documents in accordance with the Schedule for Submittals. All Samples and Product Data will have been checked by and accompanied with a specific written indication that Contractor has satisfied Contractor's responsibilities under the Contract Documents with respect to the review of the submission and will be identified clearly as to material, Supplier, pertinent data such as catalog numbers and the use for which intended.

D. When professional certification of performance criteria of materials, systems, or equipment is required by the Contract Documents, the Contractor shall provide the person or party providing the certification with full information on the relevant performance requirements and on the materials, systems, or equipment that are expected to operate at the Project site. The certification shall be based on performance under the operating conditions generally prevailing or expected at the Project site. All certificates from persons or entities other than Contractor shall be endorsed by Contractor and Contractor shall submit such certificates as its own.

E. The Contractor represents and warrants that all Shop Drawings shall be prepared by persons and entities possessing expertise and experience in the trade for which the Shop Drawing is prepared and, if required by the Contract Documents, or the Professional or applicable Laws and Regulations, by a licensed engineer or other design professional.

F. Before submission of each Submittal Contractor shall have determined and verified all quantities, dimensions, specified performance criteria, installation requirements, materials, catalog numbers and similar data with respect thereto and reviewed or coordinated each Submittal with other Submittals and with the requirements of the Work and the Contract Documents.

G. By approving and submitting to Professional any Submittals, the Contractor represents such Submittals strictly comply with the requirements of the Contract Documents and that the Contractor has determined and verified field measurements and field construction criteria related thereto, that materials are fit for their intended use and that the fabrication, shipping, handling, storage, assembly and installation of all materials, systems and equipment are in accordance with best practices in the industry and are in strict compliance with any applicable requirements of the Contract Documents. Contractor shall also coordinate each Submittal with other Submittals.

H. Contractor shall be responsible for the correctness and accuracy of the dimensions, measurements and other information contained in the Submittals.

I. Each Submittal will bear a stamp or specific indication that the Submittal complies with the Contract Documents and Contractor has satisfied its obligations under the Contract Documents with respect to Contractor’s review and approval of that Submittal. Each Submittal shall bear the signature of the representative of Contractor who approved the Submittal, together with the Contractor’s name and Project identification.

J. The Contractor shall perform no portion of the Work requiring submittal and review of Submittals until the respective submittal has been approved by the Professional. Such Work shall be in accordance with approved Submittals.

K. At the time of each submission, Contractor shall give Professional specific written notice of each variation that the Submittals may have from the requirements of the Contract Documents, and, in addition, shall cause a specific notation to be made on each Shop Drawing submitted to Professional for review and approval of each such variation.

L. Professional's review and approval will be for conformance with the design concept of the Project and for compliance with the information given in the Contract Documents and shall not extend to means, methods, techniques, sequences or procedures of construction (except where a specific means, method, technique, sequence or procedure of construction is indicated in or required by the Contract Documents) or to safety precautions or programs incident thereto. The review and approval of a separate item as such will not indicate approval of the assembly in which the item functions.

M. Contractor shall make corrections required by Professional and shall return the required number of corrected copies of Shop Drawings and other Submittals and submit as required new Submittals for review and approval. Contractor shall direct specific attention in writing to revisions on the Submittals other than the revisions called for by Professional on previous Submittals.

N. The Contractor shall direct specific attention, in writing or on resubmitted Shop Drawings, Product Data, Samples or similar submittals, to revisions other than those requested by the Professional on previous Submittals.

O. Professional's review and approval of Submittals shall not relieve Contractor from responsibility for any variation from the requirements of the Contract Documents unless Contractor has in writing called Professional's attention to each such variation at the time of submission as required by Paragraph 6.23 K. and Professional has given written approval of each such variation by a specific written notation thereof incorporated in or accompanying the Submittal approval; nor will any approval by Professional relieve Contractor from responsibility for errors or omissions in the Submittals or from responsibility for having complied with the provisions of Section 6.23. In the event Contractor fails to submit any Submittals within the time required in the Contract Documents or submits inadequate or incorrect Submittals, Contractor shall be liable for all additional costs and damage suffered by Owner as a result thereof.

P. Where a Submittal or sample is required by the Specifications, any related Work performed prior to Professional's review and approval of the pertinent submission will be the sole expense and responsibility of Contractor.

6.23 Contractor's Warranty

A. In addition to all other warranties implied by law or expressed in the Contract Documents or elsewhere, the Contractor warrants to Owner that:

1. the materials and equipment furnished under the Contract will be of the most suitable grade of their respective kinds for the purposes intended, fit and sufficient for the purpose intended, merchantable, free from defects in material and workmanship, new, and in strict conformance with the Contract Documents; and

2. the Work will be executed in a workmanlike manner, in the best manner known to each respective trade, free of defects in material and workmanship, of the highest quality in the industry; and in strict conformance with the Contract Documents.

B. The above warranties are not intended as a limitation, but are in addition to, and not in lieu of, all other express warranties set forth in this Contract and such other warranties as are implied by law, in equity, custom, and usage of trade. The Contractor, and its surety or sureties, if any, shall be liable for the satisfaction and full performance of the warranties set forth herein.

C. The Contractor's warranties above shall not be affected by the specification of a product or procedure unless Contractor objects in writing promptly, and in any event before performing the Work in question affected by or related to such product or procedure, and advises the and Professional in writing of possible substitute products or procedures which will not affect the warranty.

D. Contractor shall assign to Owner all manufacturer, supplier or installer's warranties upon Final Completion of the Work; provided, however, the Contractor's warranties provided in this Section 6.23 and other provisions of the Contract Documents shall not be affected, diminished or restricted by the limitations, restrictions, or conditions of a manufacturer, supplier or installer's warranty, including, but not limited to, the expiration of any Uniform Commercial Code statute of limitations. Inability or refusal of a Subcontractor, lower-tier Subcontractor, supplier or installer furnishing defective Work to correct or warrant such Work shall not relieve Contractor of its responsibility for the warranties set forth above and in other provisions of the Contract Documents.

E. Contractor's obligation to perform and complete the Work in strict accordance with the Contract Documents shall be absolute. None of the following shall constitute an acceptance of Work that is not in strict accordance with the Contract Documents or a release of Contractor's obligation to perform the Work in strict accordance with the Contract Documents:

1. observations or inspections by the Professional;

2. approval of any progress or final payment by the Professional;

3. the issuance of a certificate of Substantial or Final Completion or any payment by the Owner to Contractor under the Contract Documents;

4. use or occupancy of the Work or any part thereof by the Owner;

5. any acceptance by the Owner or any failure to do so;

6. any review or approval of Shop Drawings or other Submittal by the Professional;

7. any inspection, test or approval by others; or

8. any correction of defective Work by Owner.

F. The Contractor shall defend, indemnify, and save harmless the Owner from any and all loss, damages, costs, and attorneys' fees suffered or incurred on account of any breach of the aforesaid warranties, obligations and covenants.

6.24 Continuing the Work

A. Contractor shall carry on the Work and adhere to the progress schedule during all disputes or disagreements with Owner. No Work shall be delayed or postponed pending resolution of any disputes or disagreements, except as Contractor and Owner may otherwise agree in writing.

6.25 Indemnification

A. To the fullest extent permitted by law, the Contractor shall defend, indemnify, and hold harmless the Owner, the Professional, Professional's consultants, and the agents, employees, representatives, insurers and re-insurers of any of the foregoing (hereafter collectively referred to as the "Indemnitees") from and against claims, damages (including loss of use of the Work itself), punitive damages, penalties and civil fines unless expressly prohibited by law, losses and expenses, including, but not limited to, attorneys' fees, arising out of or resulting from performance of the Work to the extent caused in whole or in part by negligent acts or omissions or other fault of Contractor, a Subcontractor of any tier, Supplier or anyone directly or indirectly employed by them or anyone for whose acts they may be liable, regardless of whether or not such claim, damage, loss, or expense is caused in part by the negligent acts or omissions or other fault of a party indemnified hereunder. The Contractor's obligations hereunder are in addition to and shall not be construed to negate, abridge, or reduce other rights or obligations of indemnity that the Owner may possess. If one or more of the Indemnitees demand performance by the Contractor of obligations under this paragraph or other provisions of the Contract Documents and if Contractor refuses to assume or perform, or delays in assuming or performing Contractor's obligations, Contractor shall pay each Indemnitee who has made such demand its respective attorneys' fees, costs, and other expenses incurred in enforcing this provision. The defense and indemnity required herein shall, however, be a binding obligation upon Contractor whether or not an Indemnitee has made such demand. Even if a defense is successful to a claim or demand for which Contractor is obligated to indemnify the Indemnitees from under this Paragraph, Contractor shall remain liable for all costs of defense.

B. The indemnity obligations of Contractor under this Section 6.25 shall survive termination of this Contract or final payment thereunder. In the event of any claim or demand made against any party which is entitled to be indemnified hereunder, the Owner may in its sole discretion reserve, return or apply any monies due or to become due the Contractor under the Contract for the purpose of resolving such claims; provided, however, that the Owner may release such funds if the Contractor provides the Owner with reasonable assurance of protection of the Owner's interests. The Owner shall in its sole discretion determine if such assurances are reasonable. Owner reserves the right to control the defense and settlement of any claim, action or proceeding which Contractor has an obligation to indemnify the Indemnitees against under this Section 6.25.

C. In claims against any person or entity indemnified under this Section 6.25 by an employee of the Contractor, a Subcontractor of any tier, a Supplier, or anyone directly or indirectly employed by them or anyone for whose acts they may be liable, the indemnification obligation under this Section 6.25 shall not be limited by a limitation on amount or type of damages, compensation or benefits payable by or for the Contractor a Subcontractor of any tier or Supplier under workers' or workmen's compensation acts, disability benefit acts or other employee benefit acts.

6.26 Survival of Obligations

A. All representation, indemnifications, warranties and guarantees made in, required by or given in accordance with the Contract Documents, as well as all continuing obligations indicated in the Contract Documents, as well as all continuing obligations indicated in the Contract Documents, will survive final payment, completion and acceptance of the Work and termination of completion of the Agreement.

ARTICLE 7- OTHER WORK

7.01 Related Work at Site

A. Owner may perform other work related to the Project at the site by Owner's own forces, have other work performed by utility owners or let other direct contracts therefore which shall contain General Conditions similar to these. If the fact that such other work is to be performed was not noted in the Contract Documents, written notice thereof will be given to Contractor prior to starting any such other work. In such events, Contractor must anticipate in its scheduling that its Work may be interfered with or delayed by such other Work. Contractor shall fully cooperate and coordinate its Work with the other work to avoid or mitigate such interferences or delays.

B. Contractor shall afford each utility owner and other contractor who is a party to such a direct contract (or Owner, if Owner is performing the additional work with Owner's employees) proper and safe access to the site and a reasonable opportunity for the introduction and storage of materials and equipment and the execution of such work, and shall properly connect and coordinate the Work with theirs. Contractor shall do all cutting, fitting and patching of the Work that may be required to make its several parts come together properly and integrate with such other work. Contractor shall not endanger any work of others by cutting, excavating or otherwise altering their work and will only cut or alter their work with the written consent of Professional and the others whose work will be affected. The duties and responsibilities of Contractor under this paragraph are for the benefit of such utility owners and other contractors.

C. If any part of Contractor's Work depends on proper execution or results upon the work of any such other contractor or utility owner (or Owner), Contractor shall inspect and promptly report to Professional in writing any delays, defects or deficiencies in such work that render it unavailable or unsuitable for such proper execution and results Contractor's failure to report this will constitute an acceptance of the other work as fit and proper for integration with Contractor's Work except for latent or non-apparent deficiencies in the other work.

7.02 Coordination

A. If Owner contracts with others for the performance of other work on the Project site, the person or organization who will have authority and responsibility for coordination of the activities among the various prime contractors will be identified in the Supplementary Conditions, and the specific matters to be covered by such authority and responsibility will be itemized, and the extent of such authority and responsibilities will be provided in the Supplementary Conditions. Unless otherwise provided in the Supplementary Conditions, neither Owner nor Professional shall have any authority or responsibility in respect of such coordination.

7.03 Liability

A. Contractor shall not delay a separate contractor by neglecting to perform its Work at the proper time. Contractor shall be required to coordinate its Work with separate contractors so as to afford separate contractors a reasonable and safe opportunity for execution of their work. Any costs caused by delays or improperly timed activities or defective construction shall be borne by the party responsible therefor.

B. Contractor shall be responsible for damage to Owner's or separate contractors' property caused by Contractor or any person or entity for whose acts or omissions Contractor may be liable.

C. In the event Contractor is delayed or damaged by the activities, fault, negligent acts or omissions, delays or improperly timed activities, or defective construction of any separate contractor of Owner or person or entity for whose acts or omissions the separate contractor may be liable, Contractor agrees to solely look to the separate contractor for compensation as a result of such activities, fault, negligent acts or omissions, delays or improperly timed activities, or defective construction. Contractor shall be considered a third party beneficiary of any contract between Owner and any separate contractor for the Project solely for the purpose of recovering damages from such separate contractor which are caused by the activities, fault, negligent acts or omissions, delays or improperly timed activities, or defective construction of such separate contractor of Owner or any person or entity for whose acts or omissions such separate contractor may be liable.

D. Contractor shall be responsible for any damages of separate contractors of Owner caused by the activities, fault, negligent acts or omissions, delays or improperly timed activities, or defective construction of Contractor or of any person or entity for whose acts or omissions Contractor is liable. Contractor acknowledges that such separate contractors shall be considered third party beneficiaries of this Contract for the sole purpose of allowing any separate contractor the right to directly recover damages from Contractor which are caused by the activities, fault, negligent acts or omissions, delays or improperly timed activities, or defective construction of Contractor or of any person or entity for whose acts or omissions Contractor may be liable.

E. Should Contractor cause any damage to a separate contractor of the Owner, Contractor shall promptly attempt to settle with such separate contractor in good faith. Contractor shall defend, indemnify and hold harmless Owner, and its agents, representatives and employees from and against any claims of separate contractors in accordance with Section 6.25.

F. If a dispute arises among the Contractor, separate contractors and the Owner as to the responsibility under their respective contracts for maintaining the premises and surrounding area free from waste materials and rubbish, the may clean up and allocate the cost among those responsible as Owner determines to be just.

ARTICLE 8 - OWNER'S RESPONSIBILITIES

8.01 Termination of Professional

A. In case of termination of the employment of Professional, Owner shall appoint a design professional whose status under the Contract Documents shall be that of the former Professional.

8.02 Data and Information

A. When requested in writing by Contractor, Owner shall furnish the data required of Owner under the Contract Documents promptly.

8.03 Limitations on Owner's Responsibilities

A. The Owner shall not supervise, direct, or have control or authority over, nor be responsible for, Contractor's means, methods, techniques, sequences, or procedures of construction, or the safety precautions and programs incident thereto, or for any failure of Contractor to comply with Laws and Regulations applicable to performance of the Work. Owner will not be responsible for Contractor's failure to perform the Work in accordance with the Contract Documents.

ARTICLE 9 - PROFESSIONAL'S STATUS DURING CONSTRUCTION

9.01 General

A. Professional will be Owner's representative during the construction period. The duties and responsibilities and the limitations of authority of Professional as Owner's representative during construction are set forth in the Contract Documents and shall not be extended without written consent of Owner and Professional.

9.02 Visits to Site

A. Professional will make visits to the site at intervals appropriate to the various stages of construction to observe the progress and quality of the executed Work and to determine, in general, if the Work is proceeding in accordance with the Contract Documents. On the basis of such visits and on-site observations, Professional will keep Owner informed of the progress of the Work and will endeavor to guard Owner against defects and deficiencies in the Work.

9.03 Project Representation

A. If Owner and Engineer agree, Engineer will furnish a Resident Project Representative to assist Engineer in observing the performance of the Work. The duties, responsibilities and limitations of authority of any such Resident Project Representative and assistants will be as provided in the Supplementary Conditions. If Owner designates another agent to represent Owner at the site who is not Engineer's agent or employee, the duties, responsibilities and limitations of authority of such other person will be as provided in the Supplementary Conditions.

9.04 Clarifications and Interpretations

A. Professional will issue with reasonable promptness such written clarifications or interpretations of the requirements of the Contract Documents (in the form of Drawings or otherwise) as Professional may determine necessary, which shall be consistent with or reasonably inferable from the overall intent of the Contract Documents. If Contractor believes that a written clarification or interpretation justifies an increase in the Contract Price or an extension of the Contract Times and the parties are unable to agree to the amount or extent thereof, Contractor may make a claim therefor as provided in Articles 11 or Article 12.

9.05 Authorized Variations in Work

A. Professional may authorize minor variations in the Work from the requirements of the Contract Documents that do not involve an adjustment in the Contract Price or the Contract Times and are consistent with the overall intent of the Contract Documents. These may be accomplished by a Field Order and will be binding on Owner, and also on Contractor who shall perform the Work involved promptly. The Professional shall not have the authority to order changes without the agreement of Owner which affect the Contract Price or Contract Times.

9.06 Rejecting Defective Work

A. Professional will have authority to disapprove or reject Work which Professional believes to be defective and will also have authority to require special inspection or testing of the Work as provided in Paragraph 13.03 B., whether or not the Work is fabricated, installed or completed.

9.07 Submittals

A. In connection with Professional's responsibility for Submittals, see Section 6.22 inclusive.

9.08 Change Orders

A. In connection with Professional's responsibilities as to Change Orders, see Articles 10, 11 and 12.

9.09 Payments

A. In connection with Professional's responsibilities in respect of Applications for Payment, see Article 14.

9.10 Determinations for Unit Prices

A. Professional will determine the actual quantities and classifications of Unit Price Work performed by Contractor. Professional will review with Contractor's representative preliminary determinations on such matters before rendering a written decision thereon (by recommendation of an Application for Payment or otherwise). Professional's written decisions thereon will be final and binding upon Contractor, unless, within ten (10) days after the date of any such decision, Contractor delivers to Owner and Professional a written objection to such determination.

9.11 Limitations on Professional's Responsibilities

A. Neither Professional's authority to act under this Article 9 or elsewhere in the Contract Documents nor any decision made by Professional in good faith either to exercise or not exercise such authority shall give rise to any duty or responsibility of Professional to Contractor, any Subcontractor, any Supplier, or any other person or organization performing any of the Work, or to any surety for any of them.

9.12 Terminology

A. Whenever in the Contract Documents the terms "as ordered", "as directed", "as required", "as allowed", "as approved" or terms of like effect or import are used, or the adjectives "reasonable", "suitable", "acceptable", "proper" or "satisfactory" or adjectives of like effect or import are used to describe a requirement, direction, review or judgment of Professional as to the Work, it is intended that such requirement, direction, review or judgment will be solely to evaluate the Work for compliance with the Contract Documents (unless there is a specific statement indicating otherwise). The use of any such term or adjective shall not be effective to assign to Professional any duty or authority to supervise or direct the furnishing or performance of the Work.

ARTICLE 10 – CHANGES IN THE WORK AND CLAIMS

10.01 Authorized Changes in Work

A. Without invalidating the Agreement and without notice to any surety, Owner may, at any time or from time to time, order additions, deletions or revisions in the Work. Such additions, deletions or revisions will be authorized by a Written Amendment, a Change Order, or a Work Change Directive or Field Order. Upon receipt of any such document, Contractor shall promptly proceed with the Work involved, which will be performed under the applicable conditions of the Contract Documents (except as otherwise specifically provided).

B. A Change Order is a written instrument signed by the Owner and Contractor, stating their agreement upon all of the following:

1. a change in the Work;
2. the amount of the adjustment in the Contract Price, if any; and
3. the extent of the adjustment in the Contract Time, if any.

C. Agreement on any Change Order shall constitute a final settlement of all matters relating to the change in the Work which is the subject of the Change Order, including, but not limited to, all direct and indirect costs associated with such change and any and all adjustments to the Contract Price and the Contract Times and any applicable Milestone Dates. In the event a Change Order increases the Contract Price, Contractor shall include the Work covered by such Change Orders in Applications for Payment as if such Work were originally part of the Contract Documents.

D. A Work Change Directive is a written order approved by Professional and issued by Owner directing a change in the Work and stating a proposed basis for adjustment in the Contract Price and/or Contract Times. A Work

Change Directive shall be used in the absence of total agreement on the terms of a Change Order. Upon receipt of a Work Change Directive, the Contractor shall proceed with the change in the Work involved and advise Owner and Professional of Contractor's agreement or disagreement with the method, if any, provided in the Work Change Directive for determining the proposed adjustment in the Contract Price or Contract Times. A Construction Change Directive signed by the Contractor indicates the agreement of the Contractor therewith, including adjustment in Contract Price and Contract Times or the method for determining them. Such agreement shall be effective immediately and shall be recorded as a Change Order.

E. The Professional will have authority to issue order changes in the Work not involving adjustment in the Contract Price or extension of the Contract Times and not inconsistent with the intent of the Contract Documents. Such minor changes shall be effectuated by a written Field Order and shall be binding on Owner and Contractor. The Contractor shall carry out such changes set forth in a Field Order promptly.

10.02 Unauthorized Changes in Work

A. Contractor shall not be entitled to an increase in the Contract Price or an extension of the Contract Times with respect to any Work performed that is not required by the Contract Documents as amended, modified and supplemented by a Modification, except in the case of an emergency as provided in Article 6.21 and except in the case of uncovering Work as provided in Section 13.03 B.

10.03 Notice to Surety

A. If notice of any change affecting the general scope of the Work or the provisions of the Contract Documents (including, but not limited to, Contract Price or Contract Times) is required by the Surety. Such notice shall

10.04 Claims

A. A Claim is a demand or assertion by Contractor seeking, as a matter of right, adjustment or interpretation of Contract terms, payment of money, extension of time or any other relief with respect to the terms of the Contract. The term "Claim(s)" also includes demands and assertions of Contractor arising out of or relating to the Contract Documents, including Claims based upon breach of contract, mistake, misrepresentation, or other cause for Contract Modification or recision. Claims must be made by written notice in strict accordance with the Contract Documents. Contractor shall have the responsibility to substantiate Claims. A Claim for an adjustment in the Contract Price shall be submitted in accordance with Paragraph 11.02 B. A Claim for each adjustment in the Contract Times shall be submitted in accordance with Paragraph 12.01 A.

ARTICLE 11 - CHANGE OF CONTRACT PRICE

11.01 Contract Price

A. The Contract Price constitutes the total compensation (subject to authorized adjustments) payable to Contractor for performing the Work. All duties, responsibilities and obligations assigned to or undertaken by Contractor shall be at Contractor's expense without change in the Contract Price.

11.02 Change

A. The Contract Price may only be changed by a Change Order or by a Written Amendment. Accordingly, no course of conduct or dealings between the parties, nor express or implied acceptance of alterations or additions to the Work, and no claim that the Owner has been unjustly enriched by any alteration or addition to the Work, whether or not there is, in fact, any unjust enrichment to the Owner, shall be the basis of any Claim to an increase in any amounts due under the Contract Documents.

B. Any claim by Contractor for an adjustment in the Contract Price shall be based on written notice as set forth herein. Any claim for an increase or decrease in the Contract Price by Contractor shall be based on written notice delivered by Contractor to Owner and to Professional promptly (but in no event later than fifteen (15) days) after the occurrence of the event giving rise to the claim and stating the general nature of the claim. Notice of the amount of the claim with supporting data shall be delivered within forty-five (45) days after such occurrence (unless Professional allows an additional period of time to ascertain more accurate data in support of the claim) and shall be accompanied by Contractor's written statement that the amount claimed covers all known amounts (direct, indirect and consequential) to which Contractor is entitled as a result of the occurrence of said event. No claim for an adjustment in the Contract Price by Contractor will be valid if not submitted in accordance with this Paragraph 11.02 B.

C. Any work completed by Contractor not agreed to by Owner in a Change Order, Work Change Directive or a Field Order shall be at Contractor's sole cost and expense and shall be deemed a waiver of all rights the Contractor may have for any adjustment in the Contract Price or Contract Times.

11.03 Determination of Adjustment

A. The value of the Work covered by a Change Order or of any Claim for an increase or decrease in the Contract Price shall be determined by Owner in one of the following ways:

1. Where the Work involved is covered by unit prices contained in the Contract Documents, by application of unit prices contained in the Contract Documents to the quantities of the items involved in the change.

2. By mutual acceptance of a lump sum (which may include an allowance for overhead and profit not necessarily in accordance with Paragraph 11.06 A.2.); or

3. On the basis of the Cost of the Work (determined as provided in Paragraphs 11.04 and 11.05) plus a Contractor's Fee for overhead and profit (determined as provided in Paragraph 11.06).

11.04 Cost of the Work

A. The term Cost of the Work means the sum of all costs necessarily incurred and paid by Contractor in the proper performance of the Work. When the value of any work covered by a Change Order or when a Claim for an adjustment in Contract Price is determined on the basis of Cost of the Work, the costs to be reimbursed to Contractor will be only those additional or incremental costs required because of the change in the Work or because of the event giving rise to the Claim. Except as otherwise may be agreed to in writing by Owner, such costs shall be in amounts no higher than those prevailing in the locality of the Project, shall include only the following items and shall not include any of the costs described in Paragraph 11.05:

1. Payroll costs for employees in the direct employ of Contractor in the performance of the Work under schedules of job classifications agreed upon by Owner and Contractor. Payroll costs for employees not employed full time on the Work shall be apportioned on the basis of their time spent on the Work. Payroll costs shall include, but not be limited to, salaries and wages plus the cost of fringe benefits which shall include social security contributions, unemployment, excise and payroll taxes, workers' or workmen's compensation, health and retirement benefits, bonuses, sick leave, vacation and holiday pay applicable thereto. Such employees shall include superintendents and foremen at the site. The expenses of performing Work after regular working hours, on Saturday, Sunday or legal holidays, shall be included in the above to the extent authorized by Owner.

2. Cost of all materials and equipment furnished and incorporated in the Work, including costs of transportation and storage thereof, and Suppliers' field services required in connection therewith. All cash discounts shall accrue to Contractor unless Owner deposits funds with Contractor with which to make payments, in which case the cash discounts shall accrue to Owner. All trade discounts, rebates and refunds and all returns from sale of surplus materials and equipment shall accrue to Owner, and Contractor shall make provisions so that they may be obtained.

3. Payments made by Contractor to the Subcontractors for Work performed by Subcontractors. If required by Owner, Contractor shall obtain competitive bids from Subcontractors acceptable to Contractor and shall deliver such bids to Owner who will then determine, with the advice of Professional, which bids will be accepted. If a subcontract provides that the Subcontractor is to be paid on the basis of Cost of the Work Plus a Fee, the Subcontractor's Cost of the Work shall be determined in the same manner as Contractor's Cost of the Work. All subcontracts shall be subject to the other provisions of the Contract Documents insofar as applicable.

4. Cost of special consultants (including but not limited to engineers, Professionals, testing laboratories, surveyors, attorneys and accountants) employed for services specifically related to the Work.

5. Supplemental costs including the following

a. Cost, including transportation and maintenance, of all materials, supplies, equipment, machinery, appliances, office and temporary facilities at the site and hand tools not owned by the workers, which are consumed in the performance of the Work, and cost less market value of such items used but not consumed which remain the property of Contractor.

b. Rentals of all construction equipment and machinery and the parts thereof whether rented from Contractor or others in accordance with rental agreements approved by Owner with the advice of Professional, and the cost of transportation, loading, unloading, installation, dismantling and removal thereof - all in accordance with terms of said rental agreements. The rental of any such equipment, machinery or parts shall cease when the use thereof is no longer necessary for the Work.

c. Sales, consumer, use or similar taxes related to the Work, and for which Contractor is liable, imposed by Laws and Regulations.

6. Cost of premiums for additional Bonds and insurance required because of changes in the Work and premiums for property insurance coverage within the limits of the deductible amounts established by Owner in accordance with Paragraph 5.07.

11.05 Costs Excluded

A. The term Cost of the Work shall not include any of the following:

1. Payroll costs and other compensation of Contractor's officers, executives, principals (of partnership and sole proprietorships), general managers, engineers, Professionals, estimators, attorneys, auditors, accountants, purchasing and contracting agents, expediters, timekeepers, clerks and other personnel employed by Contractor whether at the site or in Contractor's principal or a branch office for general administration of the Work and not specifically included in the agreed upon schedule of job classifications referred to in Paragraph 11.04 A.1. or specifically covered by Paragraph 11.04 A.4. all of which are to be considered administrative costs covered by the Contractor's Fee.

2. Expenses of Contractor's principal and branch offices other than Contractor's office at the site.

3. Any part of Contractor's capital expenses, including interest on Contractor's capital employed for the Work and charges against Contractor for delinquent payments.

4. Cost of premiums for all Bonds and for all insurance whether or not Contractor is required by the Contract Documents to purchase and maintain the same (except for the cost of premiums covered by Paragraph 11.04. A.6.).

5. Costs due to the negligence of Contractor, any Subcontractor, or anyone directly or indirectly employed by any of them or for whose acts any of them may be liable including but not limited to, the correction of defective Work, disposal of materials or equipment wrongly supplied and making good any damage to property.

6. Other overhead or general expense costs of any kind and the costs of any item not specifically and expressly included in Section 11.04.

11.06 Contractor's Fee

A. The Contractor's Fee allowed to Contractor for overhead and profit shall be determined as follows:

1. a mutually acceptable fixed fee;

2. if a fixed fee is not agreed upon, then a fee based on the following percentages of the various portions of the Cost of the Work:

a. for costs incurred under Paragraphs 11.04 A.1. and 11.04 A.2., the Contractor's Fee shall be ten percent;

b. for costs incurred under Paragraph 11.04 A.3., the Contractor's Fee shall be five percent. Where one or more tiers of subcontracts are on the basis of Cost of the Work plus a fee and no fixed fee is agreed upon, the intent of this Section is that the Subcontractor who actually performs the Work, at whatever tier, will be paid a fee of ten percent (10%) of the costs incurred by Subcontractor under Paragraphs 11.04 A.1. or 11.04 A.2. and that any higher tier Subcontractor and Contractor will each be paid a fee of five percent (5%) of the amount paid to the next lower tier Subcontractor. In no event shall there be more than three-mark ups of cost on extract work regardless of the number of tiers of Subcontractors;

c. no fee shall be payable on the basis of costs itemized under Paragraphs 11.04. A.4., 11.04 A.5. and 11.04.A6;

d. the amount of credit to be allowed by Contractor to Owner for any such change which results in a net decrease in cost will be the amount of the actual net decrease plus a deduction in Contractor's Fee by an amount equal to ten percent (10%) of the net decrease; and

e. when both additions and credits are involved in any one change, the adjustment in Contractor's Fee shall be computed on the basis of the net change in accordance with Paragraphs 11.04 A.2.a. through 11.04 A.2.d., inclusive.

11.07 Submission of Itemized Costs

A. Whenever the cost of any Work is to be determined pursuant to Article 11.04, Contractor will submit in a form acceptable to Owner and Professional an itemized cost breakdown together with supporting data.

11.08 Allowance

A. It is understood that Contractor has included in the Contract Price all allowances (if any) so named in the Contract Documents and shall cause the Work so covered to be done by such Subcontractors or Suppliers and for such sums within the limit of the allowances as may be acceptable to Professional. Contractor agrees that:

1. The allowances include the cost to Contractor (less any applicable trade discount) of materials and equipment required by the allowances to be delivered at the site, and all applicable taxes; and

2. Contractor's cost for unloading and handling material on the site, labor, installation costs, overhead, profit and other expenses contemplated for the allowances have been included in the Contract Price and not in the allowances. No demand for additional payment on account of any thereof will be valid.

3. Prior to final payment, an appropriate Change Order will be issued as recommended by Professional to reflect actual amounts due Contractor on account of Work covered by allowances, and the Contract Price shall be correspondingly adjusted.

ARTICLE 12 - CHANGE OF CONTRACT TIMES

12.01 Claims for Additional Time

A. The Contract Times may only be changed by a Change Order or a Written Amendment. Any claim by Contractor for an adjustment in the Contract Price shall be based on written notice as set forth herein. Any claim for an extension or shortening of the Contract Times shall be based on written notice delivered by Contractor to Owner and to Professional promptly (but in no event later than fifteen (15) days) after the occurrence of the event giving rise to the claim and stating the general nature of the claim. Notice of the extent of the claim with supporting data shall be delivered within forty-five (45) days after such occurrence (unless Professional allows an additional period of time to ascertain more accurate data in support of the claim) and shall be accompanied by the claimant's written statement that the adjustment claimed is the entire adjustment to which the claimant has reason to believe it is entitled as a result of the occurrence of said event. No claim for an adjustment in the Contract Times will be valid if not submitted in accordance with the requirements of this Paragraph 12.01 A.

B. If abnormal weather conditions are the basis for a Claim for additional time, such Claim shall be documented by the Contractor by data acceptable to the Professional substantiating that weather conditions were abnormal for the period of time in question, and could not have been reasonably anticipated, and that weather conditions had an adverse effect on the scheduled construction. Requests for extension of the scheduled Completion Date(s) or Milestone Dates due to adverse weather conditions shall include reliable or official climatological reports for the months involved, plus a report indicating the average precipitation, temperature, and other climatological data for the past ten (10) years from a reporting station near the Project site. The ten-year average will be the basis for determining the number of adverse weather days and the effect resulting therefrom on construction which Contractor would normally expect to encounter.

12.02 Delays of Contract Times

A. If the Contractor is delayed in the commencement or progress of the Work by an act or neglect of the Owner or Professional, or of an employee of either, or by changes in the Work, or by fire, or by unavoidable casualties, acts of God, or abnormal weather conditions established pursuant to Paragraph 12.01 B, or by acts or neglect of utility owners or separate contractors performing other Work as provided in Article 7, the Contract Times and applicable Milestones will be extended in an amount equal to the time lost due to such delay if a Claim is made therefore by Contractor as provided herein. The Contract Times and applicable Milestones will not be extended due to delays within the reasonable control of Contractor. Where Contractor is prevented from completing any part of the Work within the Contract Times or any applicable Milestones due to delay beyond the control of both Owner and Contractor, including but not limited to fires, unavoidable casualties, acts of God, abnormal weather conditions, or acts or neglect of utility owners or separate contractors performing other work as provided for in Article 7, an extension of the Contract Times or any applicable Milestones in an amount equal to the time lost due to such delay shall be Contractor's sole and exclusive remedy for such delay.

B. The Contractor further acknowledges and agrees that adjustments in the Contract Times will be permitted for a delay only to the extent such delay (1) is not caused, or could not have been anticipated, by the Contractor, (2) could not be limited or avoided by the Contractor's timely notice to the Owner of the delay, (3) prevents Contractor from completing its Work by the Contract Time, and (4) is of a duration not less than one (1) day. Delays attributable to and within the control of a Subcontractor or supplier shall not justify an extension of the Contract Times.

12.03 Delay Damages

A. Professional Notwithstanding anything to the contrary in the Contract Documents, an extension in the Contract Times, to the extent permitted under this Article, shall be the sole remedy of the Contractor for any (1) delay in the commencement, prosecution or completion of the Work, (2) hindrance or obstruction in the performance of the Work, or (3) loss of productivity except as set forth below. In no event shall the Contractor be entitled to any compensation or recovery of any damages or any portion of damages resulting from delays caused by or within the control of Contractor or by acts or omissions of Contractor or its Subcontractors of any tier or Supplier or delays beyond the control of both Owner and Contractor. If the Contractor contends that delay, hindrance, obstruction or other adverse condition results from acts or omissions of the Owner, or the Professional, Contractor shall promptly provide written notice to the Owner. Contractor shall only be entitled to an adjustment in the Contract Price to the extent that such acts or omissions continue after the Contractor's written notice to the Owner of such acts or omissions. The Owner's exercise of any of its rights or remedies under the Contract Documents (including, without limitation, ordering changes in the Work, or directing suspension, rescheduling or correction of the Work) regardless of the extent or frequency of the Owner's exercise of such rights or remedies, shall not be the basis of any Claim for an increase in the Contract Price or Contract Times. In the event Contractor is entitled to an adjustment in the Contract Price for any delay, hindrance, obstruction or other adverse condition caused by the acts or omissions of the Owner, or the Professional, Contractor shall only be entitled to its actual direct costs caused thereby and Contractor shall not be entitled to and waives any right to special, indirect, or consequential damages including loss of profits, loss of savings or revenues, loss of anticipated profits, labor inefficiencies, idle equipment, home office overhead, and similar type of damages.

B. If the Contractor submits a progress report or any construction schedule indicating, or otherwise expressing an intention to achieve completion of the Work prior to any completion date required by the Contract Documents or expiration of the Contract Times, no liability of the Owner to the Contractor for any failure of the Contractor to so complete the Work shall be created or implied. Further, the Contractor acknowledges and agrees that even if Contractor intends or is able to complete the Work prior to the Contract Times, it shall assert no Claim and the Owner shall not be liable to Contractor for any failure of the Contractor, regardless of the cause of the failure, to complete the Work prior to the Contract Times.

12.04 Liquidated Damages

A. If liquidated damages are prescribed in the Agreement, the Owner may deduct from the Contract Price and retain as liquidated damages, and not as penalty or forfeiture, the sum stipulated in the Contract Documents for each calendar day after the date specified for completion of the Project that the entire Work is not substantially complete and/or finally complete.

B. The Professional shall certify the date of Substantial Completion and Final Completion which shall be conclusive and binding on the Owner and Contractor for the purpose of determining whether or not liquidated damages shall be assessed under terms hereof and the total amount due.

C. Liquidated damages or any matter related thereto shall not relieve the Contractor or his surety of any responsibility or obligation under this Contract.

ARTICLE 13 - TESTS AND INSPECTIONS; CORRECTION, REMOVAL OR ACCEPTANCE OF DEFECTIVE WORK

13.01 Access to Work

A. Professional and Professional’s representatives, other representatives of Owner, testing agencies and governmental agencies with jurisdictional interests will have access to the Work at reasonable times for their observation, inspecting and testing. Contractor shall provide proper and safe conditions for such access.

13.02 Tests and Inspections

A. Contractor shall give Professional timely notice of readiness of the Work for all required inspections, tests or approvals.

B. Contractor shall employ and pay for the services of an independent testing laboratory to perform all inspections, tests or approvals required by Laws and Regulations or the Contract Documents, except:

1. those costs incurred in connection with tests or inspections conducted pursuant to Paragraph 13.03. B. shall be paid as provided in Paragraph 13.03. B.; and

2. as otherwise specifically provided in the Contract Documents.

C. Without limiting the generality of Paragraph 13.03. B., Contractor shall be responsible for arranging and obtaining and shall pay all costs in connection with any inspections, tests or approvals required for Professional's acceptance of materials or equipment to be incorporated in the Work; or acceptance of materials, mix designs, or equipment submitted for approval prior to Contractor's purchase thereof for incorporation in the Work.

D. All inspections, tests or approvals other than those required by Laws or Regulations of any public body having jurisdiction shall be performed by organizations acceptable to Owner and Professional.

E. Neither observations, inspections, tests or approvals by Professional or others, shall relieve Contractor from Contractor's obligations to perform the Work in accordance with the Contract Documents.

F. If any Work (including the work of others) that is to be inspected, tested, or approved is covered without written concurrence of Professional, it must, if requested by Professional, be uncovered for observation. Such uncovering shall be at Contractor's expense unless Contractor has given Professional timely notice of Contractor's intention to cover the same and Professional has not acted with reasonable promptness in response to such notice.

13.03 Uncovering Work

A. If any Work is covered contrary to the written request of Professional, it must, if requested by Professional, be uncovered for Professional's observation and replaced at Contractor's expense.

B. If Professional considers it necessary or advisable that covered Work be observed by Professional or inspected or tested by others, Contractor, at Professional's request shall uncover, expose or otherwise make available for observation, inspection or testing as Professional may require, that portion of the Work in question, furnishing all necessary labor, material and equipment. If it is found that such Work is defective, Contractor shall bear all direct, indirect and consequential costs of such uncovering, exposure, observation, inspection and testing and of satisfactory reconstruction, (including but not limited to fees and charges of engineers, Professionals, attorneys and other professionals), and Owner shall be entitled to an appropriate decrease in the Contract Price. If, however, such Work is not found to be defective, Contractor shall be allowed an increase in the Contract Price or an extension of the Contract Times, or both, directly attributable to such uncovering, exposure, observation, inspection, testing and reconstruction: and, if the parties are unable to agree as to the amount or extent thereof, Contractor may make a claim therefor as provided in Articles 11 and 12.

13.04 Owner May Stop the Work

A. If the Work is defective, or Contractor fails to supply sufficient skilled workers or suitable materials or equipment, or fails to furnish or perform the Work in such a way that the completed Work will conform to the Contract Documents, Owner may order Contractor to stop the Work, or any portion thereof, until the cause for such order has been eliminated; however, this right of Owner to stop the Work shall not give rise to any duty on the part of Owner to exercise this right for the benefit of Contractor or any Subcontractor, Supplier or any other entity, or any surety for, or employee or agent of any of them.

13.05 Correction or Removal of Defective Work

A. Contractor shall correct all defective Work, whether or not fabricated, installed or completed, or, if the Work has been rejected by Professional, remove it from the Site and replace with nondefective Work. Contractor shall bear all direct, indirect and consequential costs, losses and damages (including but not limited to fees and charges of engineers, attorneys and other professionals) arising out of or relating to such correction or removal (including, but not limited to, all costs of repair and replacement of work of others).

13.06 Guarantee Period

A. If within one year after the date of Substantial Completion or longer period of time as may be prescribed by Laws or Regulations or by the terms of any applicable special guarantee required by the Contract Documents, and/or Change Orders ("Guarantee Period"), any Work is found to be defective, Contractor shall promptly, without cost to the Owner and in accordance with Owner's written instructions, either correct such defective Work, or, if it has been rejected by Owner, remove it from the site and replace it with nondefective Work. If Contractor does not promptly comply with the terms of such instructions, or in an emergency where delay would cause serious risk of loss or damage, Owner may have the defective Work corrected or the rejected Work removed and replaced, and all direct,

indirect and consequential costs of such removal and replacement (including but not limited to fees and charges of engineers, attorneys and other professionals) will be paid by Contractor. Nothing contained in this Section 13.06 shall be construed to establish a period of limitation with respect to other obligations which the Contractor might have under the Contract Documents. Establishment of the one (1) year Guarantee Period as described in this Paragraph 13.06 relates only to the specific obligation of the Contractor to correct, remove or replace the Work, and has no relationship to the time within which the obligation to comply with the Contract Documents may be sought to be enforced, nor to the time within which proceedings may be commenced to establish the Contractor's liability with respect to the Contractor's obligations under the Contract Documents. The requirements of Article 13 are in addition to and not in limitation of any of the other requirements of the Contract for warranties or conformance of the Work to the requirements of the Contract Documents.

B. Where defective Work (and damage to other Work resulting therefrom) has been corrected or removed and replaced under this paragraph 13.06, the correction period hereunder with respect to such Work will be extended for an additional period of one (1) year after such correction or removal and replacement has been satisfactorily completed.

C. Contractor's obligations under this paragraph 13.06 are in addition to any other obligation or warranty. The provisions of this Paragraph 13.06 shall not be construed as a substitute for or a waiver of the provisions of any applicable statute of limitation or repose.

13.07 Acceptance of Defective Work

A. If, instead of requiring correction or removal and replacement of defective Work, Owner (and if, prior to Professional's recommendation of final payment, also Professional) prefers to accept it, Owner may do so. Contractor shall bear all direct, indirect and consequential costs attributable to Owner's evaluation of and determination to accept such defective Work (such costs to be approved by Professional as to reasonableness and to include but not be limited to fees and charges of engineers, Professionals, attorneys and other professionals). If any such acceptance occurs prior to Professional's recommendation of final payment, a Change Order will be issued incorporating the necessary revisions in the Contract Documents with respect to the Work; and Owner shall be entitled to an appropriate decrease in the Contract Price. If the acceptance occurs after such recommendation, an appropriate amount will be paid by Contractor to Owner.

13.08 Owner May Correct Defective Work

A. If Contractor fails within a reasonable time after written notice of Professional to proceed to correct defective Work or to remove and replace rejected Work as required by Professional, or if Contractor fails to perform the Work in accordance with the Contract Documents, of if Contractor fails to comply with any other provision of the Contract Documents, Owner may, after seven days written notice to Contractor, correct and remedy any such deficiency. In exercising the rights and remedies under this paragraph, Owner shall proceed expeditiously.

B. To the extent necessary to complete corrective and remedial action, Owner may exclude Contractor from all or part of the site, take possession of all or part of the Work, and suspend Contractor's services related thereto, take possession of Contractor's tools, appliances, construction equipment and machinery at the site and incorporate in the Work all materials and equipment stored at the site or for which Owner has paid Contractor but which are stored elsewhere. Contractor shall allow Owner, Owners, agents and employees such access to the site as may be necessary to enable Owner to exercise such rights and remedies under this paragraph.

C. All direct, indirect and consequential costs, losses and damages of Owner in exercising the rights and remedies under this Paragraph 13.08 will be charged against Contractor. Such direct, indirect and consequential costs, losses and damages will include, but not be limited to, fees and charges of consultants, Professional, attorneys and other professionals, all court and arbitration costs and all costs of repair and replacement of work of others destroyed or damaged by correction, removal or replacement of Contractor's defective Work. Contractor shall not be allowed an extension of the Contract Times because of any delay in performance of the Work attributable to the exercise by Owner of Owner's rights and remedies hereunder.

D. In the event that the defective Work, equipment or material creates a hazard or an emergency situation, the requirement of seven days written notice may be reduced to notification by telephone or attempt thereof. Hazardous or emergency situations include, but are not limited to: defective traffic control devices, flood control structures and devices; or excavations.

ARTICLE 14 - PAYMENTS TO CONTRACTOR AND COMPLETION

14.01 Contract Price

A. The Owner shall compensate Contractor for all Work described herein and in the Contract Documents the Contract Price set forth in the Agreement, subject to additions and deletions as provided hereunder.

14.02 Basis Of Progress Payments

A. The Schedule of Values, if any, established as provided in the Agreement, shall serve as the basis for progress payments for a lump sum contract and will be incorporated into a form of Application for Payment acceptable to Owner. The values set forth in such schedule shall not be used in any manner as fixing a basis for additions or deletions from the Contract Price. Progress payments on account of Unit Price Work will be based on the number of units completed.

14.03 Applications For Payment

A. In the time set forth in Paragraph 14.06 B., the Contractor shall submit to the Owner and the Professional an itemized Application for Payment in accordance with the Contract Documents. Such application shall be notarized, if required, and supported by such data substantiating the Contractor's right to payment as the Owner or Professional may require, such as copies of requisitions from Subcontractors and material suppliers, and reflecting retainage as provided for herein.

B. Such applications may not include requests for payment of amounts the Contractor does not intend to pay to a Subcontractor or material supplier because of a dispute or other reason.

C. Each Application for Payment shall be accompanied by the following, all in form and substance satisfactory to the Owner:

1. Contractor's updated schedule and a progress report setting forth in detail the actual progress to date (in terms of percent complete) and the scheduled or planned progress, a listing of the value of material on hand included in the Application and other data specified in the Specifications;

2. Weekly employee payrolls for Contractor and all Subcontractors. Each Application for Payment shall be accompanied by a certified copy of employee payrolls, submitted on Federal Form WH-347 and covering the Work performed during the time covered by the Application. No payment will be due and no Application for Payment processed by the Owner until all pertinent payroll documents have been completed and approved;

3. Beginning with the second Application for Payment, a current Contractor's Receipt and Partial Release in the form provided by Owner, and, if requested by Owner, similar Receipt and Partial Releases from Subcontractors and Suppliers; and

4. All information and materials required to comply with the requirements of the Contract Documents or reasonably requested by the Owner or the Professional.

D. In addition to the requirements set forth in Paragraph 14.03 C., Owner shall not be obligated to make any progress payments until the Contractor has provided Owner and Professional:

1. certificate(s) of insurance or policies as required herein;
2. a signed copy of this Contract;
3. evidence that performance and payment bonds have been purchased as required herein;
4. an approved Schedule of Values;
5. an approved construction schedule and schedule for Submittals; and
6. other documents and certifications required by the Contract Documents.

E. The Contractor warrants that title to all Work covered by an Application for Payment will pass to the Owner no later than the time of payment, free and clear of any liens, claims, security interests or encumbrances in favor of the Contractor, Subcontractors, Suppliers, or other persons or entities making a claim by reason of having provided labor, materials and equipment relating to the Work. The Contractor further expressly undertakes to defend and hold harmless the Owner, at the Contractor's sole expense, against any such claims, liens, actions, lawsuits or proceedings.

F. The Application for Payment shall constitute a representation by the Contractor to the Owner that the Work has progressed to the point indicated; the quality of the Work covered by the Application for Payment is in accordance with the Contract Documents; and the Contractor is entitled to payment in the amount requested.

14.04 Approval For Payment

A. The Professional will, within fifteen (15) days after receipt of the Contractor's Application for Payment, either approve Contractor's Application for Payment for such amount as the determines is properly due, or notify the Contractor in writing of the reasons for withholding certification in whole or in part as provided in Section 14.05.

14.05 Decisions To Withhold Approval

A. The Professional may decide not to certify payment and may withhold approval in whole or in part, to the extent reasonably necessary to protect the Owner. If the Professional is unable to approve payment in the amount of the Application, the Professional will notify the Contractor as provided in Paragraph 14.04 A. If the Contractor and Professional cannot agree on a revised amount, the Professional will promptly issue approval for payment for the amount for which the Professional is able to determine is due Contractor. The Professional may also decide not to approve payment or, because of subsequently discovered evidence or subsequent observations, may nullify the whole or a part of approval for payment previously issued, to such extent as may be necessary in the opinion to protect the Owner from loss because of:

1. defective Work not remedied or damage to completed Work;
2. failure to supply sufficient skilled workers or suitable materials;
3. third party claims filed or reasonable evidence indicating probable filing of such claims;
4. failure of the Contractor to make payments properly to Subcontractors or Suppliers for labor, materials or equipment;
5. reasonable evidence that the Work cannot be completed for the unpaid balance of the Contract Price;
6. damage to the Owner or another contractor;
7. reasonable evidence that the Work will not be completed within the Contract Times or an unsatisfactory rate of progress made by Contractor;
8. Contractor's failure to comply with applicable Laws and Regulations; or
9. failure to carry out the Work in strict accordance with the Contract Documents.

B. When the above reasons for withholding approval are removed, approval will be made for amounts previously withheld.

14.06 Progress Payments

A. Based upon Applications for Payment submitted to the Owner and Professional by the Contractor and approvals issued by the Professional, the Owner shall make progress payments on account of the Contract Price to the Contractor as provided below and elsewhere in the Contract Documents.

B. Applications for Payment shall be submitted to Owner not later than the tenth (10th) day of the month unless otherwise indicated in the Special Conditions. The period covered by each Application for Payment shall be one (1) calendar month ending on the last day of the previous month.

C. The Owner shall make payment to Contractor for amounts due and approved by Professional not later than thirty (30) days after the Owner receives a properly detailed Application for Payment which is in compliance with the Contract Documents. The Owner shall not have the obligation to process or pay such Application for Payment until it receives an Application for Payment satisfying such requirements. Payments by Contractor and all tiers of Subcontractors to all of their subcontractors and suppliers shall be made in accordance under similar terms as contained in this Paragraph 14.06 C. Contractor shall require that this term be incorporated in all tiers of subcontracts.

D. The Contractor shall promptly pay each Subcontractor and Supplier, upon receipt of payment from the Owner, out of the amount paid to the Contractor on account of such Subcontractor's or supplier's portion of the Work, the amount to which said Subcontractor or supplier is entitled, reflecting percentages actually retained from payments to the Contractor on account of each Subcontractor's or supplier's portion of the Work. The Contractor shall, by appropriate agreement with each Subcontractor or supplier, require each Subcontractor or supplier to make payments to Sub-subcontractors in similar manner.

E. Neither the Owner nor Professional shall have an obligation to pay or to see to the payment of money to a Subcontractor of any tier or a laborer or employee of Contractor except to the extent required by Laws and Regulations. Retainage provided for by the Contract Documents are to be retained and held for the sole protection of Owner, and no other person, firm or corporation shall have any claim or right whatsoever thereto.

14.07 Failure Of Payment

A. If the Owner is entitled to reimbursement or payment from the Contractor under or pursuant to the Contract Documents, such payment by Contractor shall be made promptly upon demand by the Owner. Notwithstanding anything contained in the Contract Documents to the contrary, if the Contractor fails to promptly make any payment due the Owner, or the Owner incurs any costs and expenses to cure any default of the Contractor or to correct defective Work, the Owner shall have an absolute right to offset such amount against the Contract Price and may, in the Owner's sole discretion, elect either to: (1) deduct an amount equal to that to which the Owner is entitled from any payment then or thereafter due the Contractor from the Owner, or (2) issue a written notice to the Contractor reducing the Contract Price by an amount equal to that to which the Owner is entitled.

14.08 Substantial Completion

A. Substantial Completion is the stage in the progress of the Work as defined in Paragraph 1.01 A.45. as certified by the Professional.

B. When the Contractor considers that the Work, or a portion thereof which the Owner agrees to accept separately, is substantially complete, the Contractor shall prepare and submit to the Owner and the Professional a comprehensive list of items to be completed or corrected. The Contractor shall proceed promptly to complete and correct items on the list. Failure to include an item on such list does not alter the responsibility of the Contractor to complete all Work in accordance with the Contract Documents. Upon receipt of the Contractor's list, Professional will make an inspection to determine whether the Work or designated portion thereof is substantially complete. If the Professional's inspection discloses any item, whether or not included on the Contractor's list, which is not in accordance with the requirements of the Contract Documents, the Contractor shall complete or correct such item upon notification by Professional. The Contractor shall then submit a request for another inspection by Professional to determine Substantial Completion. When the Work or designated portion thereof is substantially complete, the Professional will prepare a Certificate of Substantial Completion which shall establish the date of Substantial Completion, shall establish responsibilities of the Owner and Contractor for security, maintenance, heat, utilities, damage to the Work and insurance, and shall fix the time within which the Contractor shall finish all items on the Punch List accompanying the Certificate which shall identify all non-conforming, defective and incomplete Work. In no event shall Contractor have more than thirty (30) days to complete all items on the Punch List and achieve Final Completion. The Certificate of Substantial Completion shall be submitted to the Owner and Contractor for their written acceptance of responsibilities assigned to them in such Certificate. Warranties required by the Contract Documents shall commence on the date of Final Completion and acceptance of the entire Work.

C. At the date of Substantial Completion, the Contractor may apply for, and if approved by Owner's Representative, the Owner, subject to the provisions herein, shall increase total payments to one hundred percent (100%) of the Contract Price less two hundred percent (200%) of the value of any incomplete Work and unsettled claims, as determined by Professional.

14.09 Partial Occupancy Or Use

A. The Owner may occupy or use any completed or partially completed portion of the Work at any stage when such portion is designated by separate agreement with the Contractor, provided such occupancy or use is consented to by the insurer and authorized by public authorities, if any, having jurisdiction over the Work. Such partial occupancy or use may commence whether or not the portion is substantially complete, provided the Owner and Contractor have accepted in writing the responsibilities assigned to each of them for payments, retainage, security, maintenance, heat, utilities, damage to the Work and insurance. When the Contractor considers a portion substantially complete, the Contractor shall prepare and submit a Punch List to the Professional and Owner as provided under Paragraph 14.09 B. Consent of the Contractor to partial occupancy or use shall not be unreasonably withheld. The stage of the progress of the Work shall be determined by Professional.

B. Immediately prior to such partial occupancy or use, the Owner, Contractor and Professional shall jointly inspect the area to be occupied or portion of the Work to be used in order to determine and record the condition of the Work. Unless otherwise agreed upon, partial occupancy or use of a portion or portions of the Work shall not constitute acceptance of Work not complying with the requirements of the Contract Documents.

14.10 Final Completion And Final Payment

A. Upon receipt of written notice that the Work is ready for final inspection and acceptance and upon receipt of a final Application for Payment, Professional will promptly make such inspection and, when Professional

finds the Work acceptable under the Contract Documents and the Contract fully performed, the will promptly issue a final approval for payment; otherwise, will return Contractor's Final Application for Payment to Contractor, indicating in writing the reasons for refusing to recommend final payment, in which case Contractor shall make the necessary corrections and resubmit the Application. Submission of a Final Application for Payment shall constitute a further representation that conditions listed in Paragraph 14.10 B. as precedent to the Contractor's being entitled to final payment have been fulfilled. All warranties and guarantees required under or pursuant to the Contract Documents shall be assembled and delivered by the Contractor to the as part of the final Application for Payment. The final approval for payment will not be issued by the until all warranties and guarantees have been received and accepted by the Owner.

B. Neither final payment nor any remaining retained percentage shall become due until the Contractor submits to the Professional and the Owner (1) an affidavit that payrolls, bills for materials and equipment, and other indebtedness connected with the Work have been paid and satisfied; (2) a certificate evidencing that insurance required by the Contract Documents to remain in force after final payment is currently in effect and will not be canceled or allowed to expire until at least thirty (30) days' prior written notice has been given to the Owner; (3) a written statement that the Contractor knows of no substantial reason that the insurance will not be renewable to cover the period required by the Contract Documents; (4) consent of surety to final payment, (5) data establishing payment or satisfaction of obligations, such as receipts, releases and waivers, to the extent and in such form as may be designated by the Owner; (6) reproducible record and marked-up drawings; (7) a certification that all Punch List Work has been completed; (8) all applicable maintenance and operating instructions and warranties and guarantees have been received and accepted by Owner; (9) subject to final payment, a final release of the Owner relating to any and all claims related to the Project; (10) a certification that all operating systems and equipment have passed all tests required by the Contract Documents; and (11) all documents required by the Contract Documents and such data and other documents as Professional may reasonably require.

C. Final Payment constituting the entire unpaid balance due shall be paid by the Owner to the Contractor within thirty (30) days after Owner's receipt of Contractor's Final Application for Payment which satisfies all the requirements of the Contract Documents and Owner’s receipt of all information and documents set forth in Section 14.10.

D. The acceptance by Contractor of its Final Payment shall be and operate as a release of all claims of Contractor against Owner for all things done or furnished or relating to the Work and for every act or alleged neglect of Owner arising out of the Work.

E. No payment under this Contract, including but not limited to final payment, shall constitute acceptance by Owner of any Work or act not in accordance with the requirements of the Contract Documents.

ARTICLE 15 - SUSPENSION OF WORK AND TERMINATION

15.01 Termination by Owner for Cause

A. In addition to other rights and remedies granted to Owner under the Contract Documents and by law, the Owner may terminate the Contract if the Contractor:

1. if Contractor commences a voluntary case under any chapter of the Bankruptcy code (Title 11, United States Code), as now or hereafter in effect, or if Contractor takes any equivalent or similar action by filing a petition or otherwise under any other federal or state law in effect at such time relating to bankruptcy or insolvency;

2. if a petition is filed against Contractor under any chapter of the Bankruptcy Code as now or hereafter in effect at the time of filing, or if a petition is filed seeking any such equivalent or similar relief against Contractor under any other federal or state law in effect at the time relating to bankruptcy or insolvency;

3. if Contractor makes a general assignment for the benefit of creditors;

4. if a trustee, receiver, custodian or agent of Contractor is appointed under applicable law or under contract, whose appointment or authority to take charge of property of Contractor is for the purpose of enforcing a Lien against such property or for the purpose of general administration of such property for the benefit of Contractor’s creditors;

5. if Contractor admits in writing an inability to pay its debts generally as they become due;

6. refuses or fails to supply enough properly skilled workers, superintendents, foremen or managers;

7. refuses or fails to supply sufficient or proper materials;

8. fails to make payment to Subcontractors for materials or labor in accordance with the respective agreements between the Contractor and the Subcontractors;

9. breaches any warranty or representations made by the Contractor under or pursuant to the Contract Documents;

10. fails to furnish the Owner with assurances satisfactory to the Owner evidencing the Contractor's ability to complete the Work in compliance with all the requirements of the Contract Documents;

11. fails after commencement of the Work to proceed continuously with the construction and completion of the Work for more than ten (10) days, except as permitted under the Contract Documents;

12. fails to maintain a satisfactory rate of progress with the Work or fails to comply with approved construction schedules or Schedule of Submittals;

13. fails to correct defective Work.

14. if Contractor fails to perform the Work in accordance with the Contract Documents (including, but not limited to, failure to supply sufficient skilled workers or suitable materials or equipment or failure to adhere to the approved Schedule as revised from time to time);

15. if Contractor disregards Laws or Regulations of any public body having jurisdiction;

16. if Contractor disregards the authority of Professional; or

17. if Contractor otherwise violates in any substantial way any provisions of the Contract Documents;

15.02 Notice of Termination

A. Owner may, without prejudice to any other rights or remedies, after giving Contractor and the surety, seven days written notice terminate the Contract and exclude Contractor from the site and take possession of the Work and of all Contractor's tools, appliances, construction equipment and machinery at the site Contractor(without liability to Contractor for trespass or conversion), incorporate in the Work all materials and equipment stored at the site or for which Owner has paid Contractor but which are stored elsewhere, and finish the Work as Owner may deem expedient. In such case, Contractor shall not be entitled to receive any further payment until the Work is finished.

B. If the unpaid balance of the Contract Price exceeds the direct, indirect and consequential costs of completing the Work and damages, costs and expenses caused thereby (including but not limited to fees and charges of engineers, Professionals, attorneys and other professionals and court and arbitration costs) such excess will be paid to Contractor. If such costs exceed such unpaid balance, Contractor shall pay the difference to Owner. Such costs incurred by Owner will be approved as reasonable by Professional and incorporated in a Change Order, but when exercising any rights or remedies under this Article Owner shall not be required to obtain the lowest price for the Work performed.

C. In exercising the Owner's right to secure completion of the Work under any of the provisions hereof, the Owner shall have the right to exercise the Owner's sole discretion as to the manner, methods, and reasonableness of costs of completing the Work.

D. The rights of the Owner to terminate pursuant to Section 15.01 will be cumulative and not exclusive and shall be in addition to any other remedy provided by law or the Contract Documents.

15.03 Suspension by the Owner for Convenience

A. The Owner may, without cause, order the Contractor in writing to suspend, delay or interrupt the Work in whole or in part for such period of time as the Owner may determine.

B. An adjustment to the Contract Price will be made for increases in the cost of performance of the Contract caused by suspension, delay or interruption. However, in the event of a suspension under this Section 15.02, Contractor hereby waives and forfeits any claims for payment of any special, indirect, incidental or consequential damages such as lost profits, loss of savings or revenue, loss of anticipated profits, idle labor or equipment, home office overhead, and similar type damages. No adjustment will be made to the extent:

1. that performance is, was, or would have been so suspended, delayed or interrupted by another cause for which the Contractor in whole or in part is responsible, or

2. that an equitable adjustment is made or denied under another provision of this Contract.

15.04 Owner's Termination For Convenience

A. The Owner may, at any time, terminate the Contract in whole or in part for the Owner's convenience and without cause. Termination by the Owner under this Section 15.04 shall be by a notice of termination delivered to the Contractor specifying the extent of termination and the effective date.

B. Upon receipt of a notice of termination for convenience, the Contractor shall immediately, in accordance with instructions from the Owner, proceed with performance of the following duties regardless of delay in determining or adjusting amounts due under this Paragraph:

1. cease operation as specified in the notice;

2. place no further orders and enter into no further subcontracts for materials, labor, services or facilities except as necessary to complete Work not terminated;

3. terminate all subcontracts and orders to the extent they relate to the Work terminated;

4. proceed to complete the performance of Work not terminated; and

5. take actions that may be necessary, or that the Owner may direct, for the protection and preservation of the terminated Work.

C. Upon such termination, the Contractor shall recover as its sole remedy payment for Work properly performed in connection with the terminated portion of the Work prior to the effective date of termination and for items properly and timely fabricated off the Project site, delivered and stored in accordance with the Owner's instructions and for all claims, costs, losses and damages incurred in settlement of terminated contracts with Subcontractors and suppliers. The Contractor hereby waives and forfeits all other claims for payment and damages, including, without limitation, anticipated profits, consequential damages and other economic losses.

D. The Owner shall be credited for (1) payments previously made to the Contractor for the terminated portion of the Work, (2) claims which the Owner has against the Contractor under the Contract and (3) the value of the materials, supplies, equipment or other items that are to be disposed of by the Contractor that are part of the Contract Price.

E. Upon determination that termination of Contractor pursuant to Paragraph 15.01 was wrongful, such termination will be deemed converted to a termination for convenience pursuant to Paragraph 15.04, and Contractor's sole and exclusive remedy for wrongful termination is limited to recovery of the payments permitted for termination for convenience as set forth in Paragraph 15.04.

ARTICLE 16 – DISPUTE RESOLUTION

16.01 Methods and Procedures

A. All Claims, disputes, and other matters in question between the Contractor and the Owner arising out of or relating to this Agreement or breach thereof shall be subject to and decided by arbitration in accordance with the Construction Industry Arbitration Rules of the American Arbitration Association currently in effect unless the parties mutually agree otherwise. At the Owner's sole option, and only upon the exercise of that sole option by the Owner, together or separately as the Owner sees fit, any dispute or other matter in question as described above may be submitted, prior to any arbitration, to nonbinding mediation in accordance with the then-current mediation rules of the American Arbitration Association. The mediation may include by consolidation, joinder or in any other manner, at the Owner's sole option, any other persons whom the Owner believes to be substantially involved in a common question of fact or law.

B. Any arbitration arising out of or relating to this Agreement or the breach thereof may include, by consolidation, joinder, or in any other manner, at the Owner's sole option, any other entities or persons whom the Owner believes to be substantially involved in a common question of fact or law.

C. A demand for arbitration shall be provided in writing to the other party to this Agreement and filed with the American Arbitration Association. A demand for arbitration shall be made within a reasonable time after the claim, dispute, or other matter in question has arisen. In no event shall the demand for arbitration be made after the date when institution of legal or equitable proceedings based on such claim, dispute, or other matter in question would be barred by the applicable statutes of limitations. If the Owner shall elect to proceed with nonbinding mediation, such election shall be made, in writing, to the Contractor and the American Arbitration Association. Such election may be made before or after either party files any demand for arbitration, but the Owner's unilateral right to proceed with

mediation shall be forfeited upon the final designation of an arbitrator by the American Arbitration Association. The election to proceed with nonbinding mediation shall not prejudice the right of either party to proceed with arbitration.

D. Unless the parties agree otherwise, discovery as provided by the Federal Rules of Civil Procedure shall be allowed in the arbitration, provided, that the arbitrator(s) shall have the authority to restrict unduly burdensome and onerous discovery. The parties shall exchange documents the parties intend to use at the hearing and disclose witnesses they anticipate testifying at the hearing. If a party intends to use an expert, such party shall provide the other party an expert report disclosing the expert's opinions and the reasons for the opinion.

E. The place of the arbitration shall be Grain Valley, Missouri.

F. This agreement to arbitrate shall be specifically enforceable under the prevailing arbitration law. Any award rendered by the arbitrator(s) shall be final and enforceable by any party to the arbitration, and judgment may be rendered upon it in accordance with applicable law in any court having jurisdiction thereof.

16.02 Continuing Performance

A. Unless otherwise agreed in writing, and notwithstanding any other rights or obligations of either of the parties under this Agreement, the Contractor shall carry on with the performance of its Services hereunder during the pendency of any claim, dispute, or other matter in question or arbitration or other proceeding to resolve any claim, dispute, or other matter in question, and the Owner shall continue to make payments of undisputed amounts to the Contractor in accordance with this Agreement, but the Owner shall be under no obligation to make payments to the Contractor on or against such claims, disputes, or other matters in question, during the pendency of any arbitration, nonbinding mediation, or other proceeding to resolve such claims, disputes, or other matters in question.

16.03 Exceptions

A. Regardless of any term or provision herein to the contrary, claims arising out of actions on claims filed or asserted by third parties on account of personal injury or death of any person shall not be subject to the terms and provisions of this Article 16.

ARTICLE 17 - MISCELLANEOUS

17.01 Notice

All notices required to be given under the terms of this Contract shall be made in writing and shall be deemed to have been made and given if sent by registered or certified mail, postage prepaid or hand-delivered (hand delivery to include by air courier services such as Federal Express, Airborne Express, or Purolator or other reputable delivery service guaranteeing delivery and providing a receipt) to the party to receive such notice at the addresses specified below or to such other address as any party hereto may subsequently specify by written notice to the other party:

If to Owner: Person and address contained in the Agreement

If to Contractor: Address contained in the Agreement or the temporary office of Contractor at the Site.

17.02 Rights and Remedies

A. Duties and obligations imposed by the Contract Documents and rights and remedies available thereunder shall be in addition to and not a limitation of duties, obligations, rights, and remedies otherwise imposed or available by law. No action or failure to act by the Owner or Professional will constitute a waiver of a right or duty afforded to Owner under the Contract Documents, nor will such action or failure to act constitute approval of or acquiescence in a breach thereunder, except as may be specifically agreed in writing. The terms of this Contract and all representations, indemnifications, warranties and guarantees made in, required by or given in accordance with the Contract Documents, as well as all continuing obligations indicated in the Contract Documents, will survive final payment, completion and acceptance of the Work and termination or completion of the Work and shall remain in effect so long as the Owner is entitled to protection of its rights under applicable law. Contractor shall carry out the Work and adhere to the current construction schedule during all disputes or disagreements with the Owner. No Work shall be delayed or postponed pending resolution of any disputes or disagreements except as the Owner and Contractor may otherwise agree to in writing.

17.03 Buy American Requirements

A. Pursuant to the Missouri Domestic Product Procurement (Buy American) Act, RSMo. §§ 34.350 to 34.359, any manufactured goods or commodities used or supplied either in the performance of this Contract or of any subcontract thereto shall be manufactured, assembled or produced in the United States unless one of the exceptions contained in that Act applies. The Contractor shall comply with such requirements and shall provide proof of compliance with this provision both at the time of bid and before any payment is made on the Contract. Pursuant to

RSMo. § 71.140, preference shall be given to materials, products, supplies, provisions and all other articles produced, manufactured, compounded, made, or grown in the State of Missouri. The Contractor shall comply with such requirements and shall provide proof of compliance with this provision at the time of bid and before any payment is made on the Contract.

17.04 Successors and Assigns

A. The Contractor hereby binds itself, its partners, successors, assigns and legal representatives to the Owner in respect to covenants, agreements and obligations contained in the Contract Documents. Contractor shall not assign the Contract or proceeds hereof without written consent of the Owner. If Contractor attempts to make such an assignment without such consent, it shall be void and confer no rights on third parties, and Contractor shall nevertheless remain legally responsible for all obligations under the Contract. The Owner's consent to any assignment is conditioned upon Contractor entering into a written assignment which contains the following language: "it is agreed that the funds to be paid to the assignee under this assignment are subject to performance by the Contractor and to claims and to liens for services rendered or materials supplied for the performance of the Work required in said Contract in favor of all persons, firms, corporations rendering such services or supplying such materials."

17.05 Records

A. The Owner, or any parties it deems necessary, shall have access to and the right to examine any accounting or other records of the Contractor involving transactions and Work related to this Contract for five (5) years after final payment or five (5) years after the final resolution of any on going disputes at the time of final payment. All records shall be maintained in accordance with generally accepted accounting procedures, consistently applied. Subcontractors of any tier shall be required by Contractor to maintain records and to permit audits as required of Contractor herein.

17.06 General

A. The Contract Documents are the exclusive statement of the agreement of the parties with respect to its subject matter and the Contract Documents supersedes and replaces all prior agreements, discussions and representations, whether written or oral, relating to the subject matter hereof. The Contract Documents may only be amended, modified or changed by a Modification.

B. All headings, titles and paragraph captions are inserted in this Contract for convenience of reference only, are descriptive only and shall not be deemed to add or detract from or otherwise modify the meaning of the paragraphs.

C. Contractor acknowledges and agrees that time and exact performance are of the essence of this Contract.

D. Contractor and Owner agree to do all acts and things and to make, execute and deliver such written instruments, as shall from time to time be reasonably required to carry out the terms and provisions of the Contract Documents.

E. Any specific requirement in this Contract that the responsibilities or obligations of the Contractor also apply to a Subcontractor is added for emphasis and are also hereby deemed to include a Subcontractor of any tier. The omission of a reference to a Subcontractor in connection with any of the Contractor's responsibilities or obligations shall not be construed to diminish, abrogate or limit any responsibilities or obligations of a Subcontractor of any tier under the Contract Documents or the applicable subcontract.

F. This Contract shall be interpreted, construed, enforced and regulated under and by the laws of the State of Missouri. Whenever possible, each provision of this Contract shall be interpreted in a manner as to be effective and valid under applicable law. If, however, any provision of this Contract, or a portion thereof, is prohibited by law or found invalid under any law, only such provision or portion thereof shall be ineffective, without invalidating or affecting the remaining provisions of this Contract or valid portions of such provision, which are hereby deemed severable. Contractor and Owner further agree that in the event any provision of this Contract, or a portion thereof, is prohibited by law or found invalid under any law, this Contract shall be reformed to replace such prohibited or invalid provision or portion thereof with a valid and enforceable provision which comes as close as possible to expressing the intention of the prohibited or invalid provision.

G. Each and every provision of law and clause required by law to be inserted in this Contract shall be deemed to be inserted herein, and the Contract shall be read and enforced as though it were included herein, and if through mistake or otherwise any such provision is not inserted, or is not correctly inserted, then upon the written application of either party the Contract shall forthwith be physically amended to make such insertion or correction.

H. Owner's total liability to Contractor and anyone claiming by, through, or under Contractor for any Claim, cost, loss, expense or damage caused in part by the fault of Owner and in part by the fault of Contractor or any other entity or individual shall not exceed the percentage share that Owner's fault bears to the total fault of Owner, Contractor and all other entities and individuals as determined on the basis of comparative fault principles.

I. Contractor agrees that Owner shall not be liable to Contractor for any special, indirect, incidental, or consequential damage whatsoever, whether caused by Owner's negligence, fault, errors or omissions, strict liability, breach of contract, breach of warranty or other cause or causes whatsoever. Such special, indirect, incidental or consequential damages include, but are not limited to loss of profits, loss of savings or revenue, loss of anticipated profits, labor inefficiencies, idle equipment, home office overhead, and similar types of damages.

J. Nothing contained in this Contract or the Contract Documents shall create any contractual relationship with or cause of action in favor of a third party against the Owner.

K. Any provision or provisions of this Contract to the contrary notwithstanding, Contractor and Owner intend that the relationship between Owner and Contractor shall be that of a project owner and an independent contractor.

L. Payments and amounts due and unpaid by Contractor to Owner under the Contract Documents shall bear interest from the date payment is due at the rate of one and one-half percent (1.5%) per month.

M. The terms "hereof," "herein," and "hereunder" and words of similar import shall be construed to refer to this Contract as a whole, and not to any particular paragraph, section or provision unless expressly so stated.

N. Should Owner be required to institute any action, including, any arbitration proceeding, to enforce any of its rights set forth in the Contract Documents, then Owner shall be entitled to reimbursement from Contractor for all reasonable attorneys' fees and costs incurred. In the event Contractor institutes any action, including any arbitration proceeding, against Owner and in the further event Owner prevails in such action, Contractor shall pay Owner the amount of its reasonable attorneys' fees incurred in such action.

Supplementary Conditions

These Supplementary Conditions amend or supplement the Grain Valley General Conditions that are included in this contract. All provisions that are not so amended or supplemented remain in full force and effect.

The terms used in these Supplementary Conditions have the meanings stated in the General Conditions. Additional terms used in these Supplementary Conditions have the meanings stated below, which are applicable to both the singular and plural thereof.

The address system used in these Supplementary Conditions is the same as the address system used in the General Conditions, with the prefix "SC" added thereto.

ARTICLE 1 – DEFINITIONS AND TERMINOLOGY

SC-1.01 Defined Terms

Add a new paragraph 1.01.A.53 immediately following paragraph 1.01.A.52 of the General Conditions to read as follows:

1.01.A.53. *Bid* – The offer of a Bidder submitted on the prescribed form setting forth the prices for the Work to be performed. The terms "Bid" and "Proposal" as used herein are interchangeable.

Modify the definition of Specifications contained in paragraph 1.01.A.40 of the General Conditions to read as follows:

Specifications – The part of the Contract that consists of written requirements for materials, equipment, systems, standards, and workmanship as applied to the Work, and certain administrative requirements and procedural matters applicable to the Work in Divisions 1 through 46 of the Contract Documents.

ARTICLE 3 – DOCUMENTS; INTENT, REQUIREMENTS, REUSE

SC-3.02 Resolving Discrepancies

Add a new paragraph 3.02.C.3 immediately following paragraph 3.02.C.2 of the General Conditions which is to read as follows:

3.02.C.3. In the event that any of the provisions contained in the General Conditions, Supplementary Conditions, Specifications (Divisions 1 thru 48) or Drawings conflict, it is understood and agreed by both parties hereto that instructions or information on the drawings shall prevail.

ARTICLE 4 – AVAILABILITY OF LANDS; PHYSICAL CONDITIONS; REFERENCE POINTS

4.02 Subsurface and Physical Conditions

SC-4.02 **Add the following new paragraphs immediately after Paragraph 4.02.B:**

C. The following reports of explorations and tests of subsurface conditions at or adjacent to the Site are known to Owner and are included in Appendix A:

1. Report dated January 20, 2025*, prepared by Terracon, entitled: "Grain Valley Water Tower Geotechnical Engineering Report", consisting of 32 pages.*

a. None of the contents of such reports of explorations and tests of subsurface conditions is Technical Data on whose accuracy Contractor may rely.

SC-4.03 Underground Facilities

Delete paragraph 4.03 of the General Conditions in its entirety and insert the following in its place:

4.03 UNDERGROUND FACILITIES - When the drawings or other Contract Documents include information pertaining to the location, size, material, description or type of underground utility facilities, such information is only included for the convenience of the Bidder. The OWNER or ENGINEER assumes no responsibility whatever in respect to the sufficiency or accuracy of the information, or lack of information shown on the plans relative to the location, size, material, description or type of underground utility facilities.

Where underground main distribution conduits such as water, gas, sewer, electric power, telephone or cable television are shown on the plans, the Contractor, for the purpose of preparing a bid, shall assume that every property parcel will be served by a service connection for each type of utility.

It shall be the Contractor's responsibility to determine the actual location of all existing underground facilities, including service connections to underground utilities. Prior to construction, the Contractor shall notify the utility company of his operational plans and shall obtain from the respective utility companies detailed information and assistance relative to the location of their facilities and the working schedule of the utility companies for removal or adjustment where removal or adjustment is required. In the event an unexpected utility interference is encountered during construction, the Contractor shall immediately notify the utility company of jurisdiction. The Engineer shall also be immediately notified. Any such mains and services disturbed by the Contractor's operations shall be restored to service at once. Whenever possible, residents shall be notified in advance if their service is to be disconnected and no house shall be left without service overnight. The Contractor shall not interrupt the service function or disturb the supporting base of any utility without authority from the owner of the utility. Where protection is required to insure support of utilities, the Contractor shall, unless otherwise provided, furnish and place the necessary protection at its expense.

SC-4.06 Difficulties Encountered

Add a new paragraph 4.07 immediately following paragraph 4.06.A of the General Conditions which is to read as follows:

4.06 All bidders for the work under this Contract are required before submitting all proposals, to examine the site of the work and adjacent premises, and the various means of approach to the site, and to make all necessary investigations in order to inform themselves thoroughly as to the character and magnitude of all work involved in the complete execution

of this contract, and as to the facilities for delivering, handling and installing the construction equipment and the conditions and difficulties that will be encountered in the performance of the work specified herein. No pleas of ignorance of conditions that exist or that may hereafter exist, or of difficulties that will be encountered in the execution of the work hereunder as a result of failure to make necessary examinations and investigations, will be accepted as a sufficient excuse for any failure or omission on the part of the Contractor to fulfill, in every detail, all of the requirements of this contract, or will be accepted as a basis for any claim whatsoever for extra compensation.

ARTICLE 5 – INSURANCE AND BONDS

5.06 Contractor's Insurance

SC 5.06 **Add the following new paragraph immediately after Paragraph 5.06.M:**

N. The limits of liability for the insurance required by Paragraph 5.04 of the General Conditions shall provide coverage for not less than the following amounts or greater where required by Laws and Regulations:

1. Workers' Compensation, and related coverages under Paragraphs 5.04.B of the General Conditions:

State:	Statutory
Federal (e.g., Longshoreman's):	Statutory
Employer's Liability:	$ 500,000

2. Contractor's Commercial General Liability under Paragraphs 5.02.A and 6.03.C of the General Conditions:

General Aggregate	$ 2,000,000
Products - Completed Operations Aggregate	$ 2,000,000
Personal and Advertising Injury	$ 1,000,000
Each Occurrence (Bodily Injury and Property Damage)	$ 1,000,000

3. Automobile Liability under Paragraph 6.03.D. of the General Conditions:

Combined Single Limit of	$ 1,000,000

4. Excess or Umbrella Liability:

Per Occurrence	$ 3,000,000
General Aggregate	$ 3,000,000

5. Contractor's Pollution Liability:

Each Occurrence	$ N/A
General Aggregate	$ N/A

☒ If box is checked, Contractor is not required to provide Contractor's Pollution Liability insurance under this Contract

6. Additional Insureds: In addition to Owner and Engineer, include as additional insureds the following: Tri-County Water Authority

7. Contractor's Professional Liability:

Each Claim	$ 2,000,000
Annual Aggregate	$ 2,000,000

8. Builder's Risk:

Each Occurrence	$ 2,000,000
General Aggregate	$ 2,000,000

☐ If box is checked, Contractor is not required to provide Builder's Risk insurance under this Contract

ARTICLE 9 – PROFESSIONAL'S STATUS DURING CONSTRUCTION

9.03 Project Representation

SC-9.03 **Add the following new paragraphs immediately after Paragraph 9.03.A:**

B. The Resident Project Representative (RPR) will be Engineer's representative at the Site, will act as directed by and under the supervision of Engineer, and will confer with Engineer regarding RPR's actions.

1. General: RPR's dealings in matters pertaining to the Work in general shall be with Engineer and Contractor. RPR's dealings with Subcontractors shall only be through or with the full knowledge and approval of Contractor. RPR shall generally communicate with Owner only with the knowledge of and under the direction of Engineer.

2. Schedules: Review the progress schedule, schedule of Shop Drawing and Sample submittals, and Schedule of Values prepared by Contractor and consult with Engineer concerning acceptability.

3. Conferences and Meetings: Attend meetings with Contractor, such as preconstruction conferences, progress meetings, job conferences, and other Project-related meetings, and prepare and circulate copies of minutes thereof.

4. Liaison:

a. Serve as Engineer's liaison with Contractor. Working principally through Contractor's authorized representative or designee, assist in providing information regarding the provisions and intent of the Contract Documents.

b. Assist Engineer in serving as Owner's liaison with Contractor when Contractor's operations affect Owner's on-Site operations.

c. Assist in obtaining from Owner additional details or information, when required for proper execution of the Work.

5. Interpretation of Contract Documents: Report to Engineer when clarifications and interpretations of the Contract Documents are needed and transmit to Contractor clarifications and interpretations as issued by Engineer.

6. Shop Drawings and Samples:

a. Record date of receipt of Samples and Contractor-approved Shop Drawings.

b. Receive Samples which are furnished at the Site by Contractor, and notify Engineer of availability of Samples for examination.

c. Advise Engineer and Contractor of the commencement of any portion of the Work requiring a Shop Drawing or Sample submittal for which RPR believes that the submittal has not been approved by Engineer.

7. Modifications: Consider and evaluate Contractor's suggestions for modifications in Drawings or Specifications and report such suggestions, together with RPR's recommendations, if any, to Engineer. Transmit to Contractor in writing decisions as issued by Engineer.

8. Review of Work and Rejection of Defective Work:

a. Conduct on-Site observations of Contractor's work in progress to assist Engineer in determining if the Work is in general proceeding in accordance with the Contract Documents.

b. Report to Engineer whenever RPR believes that any part of Contractor's work in progress is defective, will not produce a completed Project that conforms generally to the Contract Documents, or will imperil the integrity of the design concept of the completed Project as a functioning whole as indicated in the Contract Documents, or has been damaged, or does not meet the requirements of any inspection, test or approval required to be made; and advise Engineer of that part of work in progress that RPR believes should be corrected or rejected or should be uncovered for observation, or requires special testing, inspection or approval.

9. Inspections, Tests, and System Start-ups:

a. Verify that tests, equipment, and systems start-ups and operating and maintenance training are conducted in the presence of appropriate Owner's personnel, and that Contractor maintains adequate records thereof.

b. Observe, record, and report to Engineer appropriate details relative to the test procedures and systems start-ups.

10. Records:

a. Prepare a daily report or keep a diary or log book, recording Contractor's hours on the Site, Subcontractors present at the Site, weather conditions, data relative to questions of Change Orders, Field Orders, Work Change Directives, or changed conditions, Site visitors, deliveries of equipment or materials, daily activities, decisions, observations in general, and specific observations in more detail as in the case of observing test procedures; and send copies to Engineer.

b. Record names, addresses, fax numbers, e-mail addresses, web site locations, and telephone numbers of all Contractors, Subcontractors, and major Suppliers of materials and equipment.

c. Maintain records for use in preparing Project documentation.

11. Reports:

a. Furnish to Engineer periodic reports as required of progress of the Work and of Contractor's compliance with the Progress Schedule and schedule of Shop Drawing and Sample submittals.

b. Draft and recommend to Engineer proposed Change Orders, Work Change Directives, and Field Orders. Obtain backup material from Contractor.

c. Immediately notify Engineer of the occurrence of any Site accidents, emergencies, acts of God endangering the Work, force majeure or delay events, damage to property by fire or other causes, or the discovery of any Constituent of Concern or Hazardous Environmental Condition.

12. Payment Requests: Review applications for payment with Contractor for compliance with the established procedure for their submission and forward with recommendations to Engineer, noting particularly the relationship of the payment

requested to the Schedule of Values, Work completed, and materials and equipment delivered at the Site but not incorporated in the Work.

13. Certificates, Operation and Maintenance Manuals: During the course of the Work, verify that materials and equipment certificates, operation and maintenance manuals and other data required by the Contract Documents to be assembled and furnished by Contractor are applicable to the items actually installed and in accordance with the Contract Documents, and have these documents delivered to Engineer for review and forwarding to Owner prior to payment for that part of the Work.

14. Completion:

a. Participate in Engineer's visits to the Site to determine Substantial Completion, assist in the determination of Substantial Completion and the preparation of a punch list of items to be completed or corrected.

b. Participate in Engineer's final visit to the Site to determine completion of the Work, in the company of Owner and Contractor, and prepare a final punch list of items to be completed and deficiencies to be remedied.

c. Observe whether all items on the final list have been completed or corrected and make recommendations to Engineer concerning acceptance and issuance of the notice of acceptability of the work.

C. The RPR shall not:

1. Authorize any deviation from the Contract Documents or substitution of materials or equipment (including "or-equal" items).

2. Exceed limitations of Engineer's authority as set forth in the Contract Documents.

3. Undertake any of the responsibilities of Contractor, Subcontractors, or Suppliers.

4. Advise on, issue directions relative to, or assume control over any aspect of the means, methods, techniques, sequences or procedures of Contractor's work.

5. Advise on, issue directions regarding, or assume control over security or safety practices, precautions, and programs in connection with the activities or operations of Owner or Contractor.

6. Participate in specialized field or laboratory tests or inspections conducted off-site by others except as specifically authorized by Engineer.

7. Accept Shop Drawing or Sample submittals from anyone other than Contractor.

8. Authorize Owner to occupy the Project in whole or in part.

SC-9.10 Determination of Unit Prices

Add the following new Paragraph 9.10.B immediately after Paragraph 9.10.A:

B. The unit price of an item of Unit Price Work shall be subject to reevaluation and adjustment under the following conditions:

1. if the extended price of a particular item of Unit Price Work amounts to 25 percent or more of the Contract Price (based on estimated quantities at the time of Contract formation) and the variation in the quantity of that particular item of Unit Price Work actually furnished or

performed by Contractor differs by more than _25__ percent from the estimated quantity of such item indicated in the Agreement; and

2. if there is no corresponding adjustment with respect to any other item of Work; and

3. if Contractor believes that Contractor has incurred additional expense as a result thereof, Contractor may submit a Change Proposal, or if Owner believes that the quantity variation entitles Owner to an adjustment in the unit price, Owner may make a Claim, seeking an adjustment in the Contract Price.

ARTICLE 14 – PAYMENTS TO CONTRACTOR AND COMPLETION

SC-14.03 Applications For Payments

Add the following new paragraph 14.03.G immediately after paragraph 14.03.F.

G. From the amounts determined to have been earned by the CONTRACTOR, there shall be deducted five percent (5%) to be retained for the duration of the project until final payment.

ARTICLE 16 – DISPUTE RESOLUTION

Add the following new paragraph immediately after Paragraph 16.03.

SC-16.04 Mediation

A. Either Owner or Contractor may request resolution of any Claim submitted to the Engineer for a decision before such decision becomes final based on the following sequence:

1. The Owner and Contractor agree to attempt resolution of dispute through direct negotiations.

2. If such negotiations are not fully successful, the Owner and Contractor agree to request formal nonbinding mediation to be conducted in accordance with rules and procedures governed by the Construction Industry Mediation Rules of the American Arbitration Association in effect as of the Effective Date of the Agreement. The request for mediation shall be submitted in writing to the American Arbitration Association and the other party to the Contract. The cost for mediation shall be paid equally between Owner and Contractor. Timely submission of the request shall stay the effect of Paragraph 12.01.B. The process shall be concluded within 30 days of filing of the request. The date of termination of the mediation shall be determined by the application of the mediation rules referenced above.

3. If the dispute remains unresolved after the above steps, the Owner and Contractor reserve the right to proceed to civil litigation in the court of jurisdiction where the project is located.

END OF DOCUMENT 00 80 00

PART 1 GENERAL

1.01 DEFINED TERMS

A. Terms, which are defined in the General Conditions as provided in this contract, have the meanings assigned to them in the General Conditions.

B. Terms which are defined in Instructions to Bidders have the meanings assigned to them in that Document included in this Contract Document by this reference.

C. Certain additional terms used in Contract Documents are defined generally in this Document.

D. A substantial amount of specification language constitutes definitions for terms found in other Contract Documents, including Drawings which must be recognized as diagrammatic in nature and not completely descriptive of requirements indicated thereon. Definitions and explanations of this Section are not necessarily either complete or exclusive, but are general for work to the extent not stated more explicitly in another provision of contract documents.

1.02 DEFINITIONS

A. A/E and Architect/Engineer: ENGINEER as defined in Agreement.

B. Approve: Where used in conjunction with Engineer's response to submittals, requests, applications, inquiries, reports and claims by Contractor, the meaning of term "approved" will be held to limitations of Engineer's responsibilities and duties as specified in General and Supplementary Conditions. In no case will "approval" by Engineer be interpreted as a release of Contractor from responsibilities to fulfill requirements of Contract Documents.

C. Bidding Requirements: The portion of the Bidding Documents consisting of Documents numbered between 00 01 00 and 00 49 90 as listed in the Table of Contents of the Contract Documents.

D. Contracting Requirements: The portion of the Contract Documents consisting of Documents numbered between 00 50 00 and 01 00 00 as listed in the Table of Contents of the Contract Documents.

E. Directed, Requested, Etc.: Where not otherwise explained, terms such as "directed", "requested", "authorized", "selected", "approved", "required", "accepted", and "permitted", mean "directed by Engineer", "requested by Engineer", etc. However, no such implied meaning will be interpreted to extend Engineer's responsibility into Contractor's area of construction supervision.

F. Furnish: As defined in Document 00 70 00, General Conditions.

G. General Requirements: Provisions or requirements of Division 1 Sections, General Requirements, apply to entire work of Contract and, where so indicated, to other elements which are included in project.

H. Indicated: A cross-reference to details, notes or schedules on drawings, to other paragraphs or schedules in the Specifications, and to similar means of recording requirements in the contract documents. Where terms such as "shown", "noted", "scheduled", and "specified", are used in lieu of "indicated", it is for purpose of helping reader locate cross-reference, and no limitation is intended except as specifically noted.

I. Install: As defined in Document 00 70 00, General Conditions.

J. Installer: Entity (person or firm) engaged by Contractor or its subcontractor or sub-subcontractor for performance of a particular unit of work at project site, including installation, erection, application and similar required operations. It is a general requirement that such entities (installers) be expert in operations they are engaged to perform.

K. Project Site: Space available to Contractor for performance of work, either exclusively or in conjunction with others performing other work as part of project. Extent of project site is shown on drawings.

L. Provide: As defined in Document 00 70 00, General Conditions.

M. Testing Laboratory: An independent entity engaged to perform specific inspections or tests of the work, either at project site or elsewhere; and to report and (if required) interpret results of those inspections or tests.

1.03 FORMAT AND SPECIFICATION EXPLANATIONS

A. Specification Production: None of these explanations will be interpreted to modify substance of requirements. Portions of these specifications have been produced by Engineer's standard methods of editing master specifications, and may contain minor deviations from traditional writing formats. Such deviations are a normal result of this production technique and no other meaning will be implied or permitted.

B. Format Explanation: Format of principal portions of these specifications can be described as follows; although other portions may not fully comply and no particular significance will be attached to such compliance or non-compliance.
   1. Sections and Divisions: For convenience, basic unit of specification text is a "section", each unit of which is named and numbered. These are organized "divisions", which are recognized as the present industry-consensus on uniform organization and sequencing of specifications. The section title is not intended to limit meaning or content of section, nor to be fully descriptive of requirements specified therein, nor to be an integral part of text.
   2. Section Parts: Each section of specifications has been subdivided into 3 (or less) "parts" for uniformity and convenience (Part 1 - General; Part 2 - Products; and Part 3 - Execution). These do not limit the meaning of and are not an integral part of text which specifies requirements.

C. Underscoring: Used strictly to assist reader of specification text in scanning test for key words in content (for quick recall). No emphasis on or relative importance of text is intended where underscoring is used.

D. Imperative Language: Used generally in specifications. Except as otherwise indicated, requirements expressed imperatively are to be performed by Contractor. For clarity of reading at certain locations, contrasting subjective language is used to describe responsibilities which must be fulfilled indirectly by Contractor, or when so noted, by others.

E. Section Numbering: Used to facilitate cross-references in contract documents. Sections are placed in Project Manual in numeric sequence; however, numbering sequence is not complete, and listing of sections at beginning of Project Manual must be consulted to determine numbers and names of specification sections in contract documents.

F. Page Numbering: Numbered independently for each section; recorded in listing of sections (Index or Table of Contents) in Project Manual. Section number is shown with page number at bottom of each page, to facilitate location of text in Project Manual.

G. Project Identification: Project number of contract documents is recorded at bottom of each page of the specifications to minimize possible misuse of specifications, or confusion with other project specifications.

H. Specification Content: Because of methods by which this project specification has been produced, certain general characteristics of content, and conventions in use of language are explained as follows:
   1. Specifying Methods: Techniques or methods of specifying to record requirements varies throughout text, and may include "prescriptive", "open generic-descriptive", or "compliance with standards", "performance", "proprietary", or a combination of these. Method used for specifying one unit of work has no bearing on requirements for another unit of work.
   2. Overlapping and Conflicting Requirements: Where compliance with 2 or more industry standards or sets of requirements is specified, and overlapping of those different standards or requirements establishes different or conflicting minimums or levels of quality, most stringent requirement is intended and will be enforced, unless specifically detailed language written into Contract Documents (not by way of reference to an industry standard) clearly indicates that a less stringent requirement is to be fulfilled. Refer apparently equal but different requirements, and uncertainties as to which level of quality is more stringent, to Engineer for a decision before proceeding.
      a. Contractor's Option: Except for overlapping or conflicting requirements, where more than one set of requirements are specified for a particular unit of work, option is intended to be Contractor's regardless of whether specifically indicated as such.

I. Minimum Quality/Quantity: In every instance, quality level or quantity shown or specified is intended as minimum for the work to be performed or provided. Except as otherwise specifically indicated, actual work may either comply exactly with that minimum (within specified tolerances), or may exceed that minimum (within

specified tolerances), or may exceed that minimum within reasonable limits. In complying with requirements, indicated numeric values are either minimums or maximums as noted or as appropriate for context of requirements. Refer instances of uncertainty to Engineer for decision before proceeding.

J. Specialists; Assignments: In certain instances, specification text requires (or at least implies) that specific work be assigned to specialists or expert entities, who must be engaged for performance of those units of work. These must be recognized as special requirements over which Contractor has no choice or option. These assignments must not be confused with (and are not intended to interfere with) normal application of regulations, union jurisdictions and similar conventions. One purpose of such assignments is to establish which party or entity involved in a specific unit of work is recognized as "expert" for indicated construction processes or operations. Nevertheless, final responsibility for fulfillment of entire set of requirements remains with Contractor.

K. Trades: Except as otherwise indicated, the use of titles such as "carpentry" in specification text, implies neither that the work must be performed by an accredited or unionized tradesperson of corresponding generic name (such as "carpenter"), nor that specified requirements apply exclusively to work by tradespersons of that corresponding generic name.

L. Abbreviations: Language of specifications and other contract documents is of the abbreviated type in certain instances, and implies words and meanings which will be appropriately interpreted. Actual word abbreviations of self-explanatory nature have been included in texts. Specific abbreviations have been established, principally for lengthy technical terminology and primarily in conjunction with coordination of specification requirements with notations on drawings and in schedules. These are frequently defined in section at first instance of use. Trade association names and titles of general standards are frequently abbreviated.
   1. Singular words will be interpreted as plural and plural words will be interpreted as singular where applicable and where full context of contract documents so indicates.

END OF DOCUMENT 00 81 00

Reset Form Print Form

Form **5060**

Missouri Department of Revenue
Project Exemption Certificate

This form is to be completed and given to your contractor.

Exempt Entity and Project Information

Name of Exempt Entity Issuing the Certificate			Missouri Tax Exemption Number
City of Grain Valley			1 | 2 | 4 | 8 | 9 | 5 | 7 | 3
Address	**City**	**State**	**ZIP Code**
711 South Main Street	Grain Valley	MO	64029
E-mail Address			
pmartin@cityofgrainvalley.org			
Project Number	**Project Begin Date (MM/DD/YYYY)**		**Estimated Project End Date (MM/DD/YYYY)**
	___ ___ / ___ ___ / ___ ___ ___ ___		___ ___ / ___ ___ / ___ ___ ___ ___

Description of Project
Water Tower Upgrade

Project Location	Certificate Expiration Date (MM/DD/YYYY)
1201 Tyer Road	___ ___ / ___ ___ / ___ ___ ___ ___

Provide a signed copy of this certificate, along with a copy of the exempt entity's Missouri Sales and Use Tax Exemption Letter to each contractor or subcontractor who will be purchasing tangible personal property for use in this project. It is the responsibility of the exempt entity to ensure the validity of the information on the certificate. The exempt entity must issue a new certificate if any of the information changes.

Signature of Authorized Exempt Entity	Printed Name of Authorized Exempt Entity	Date (MM/DD/YYYY)
	Patrick Martin, City Representative	___ ___ / ___ ___ / ___ ___ ___ ___

Contractor

The Missouri exempt entity named above hereby authorizes the purchase, without sales tax, of tangible personal property to be incorporated or consumed in the construction project identified herein and no other, pursuant to **Section 144.062, RSMo.** Under penalties of perjury, I declare that the above information and any attached supplement is true, complete, and correct.

Name of Purchasing Contractor	Signature of Contractor	Date (MM/DD/YYYY)
		___ ___ / ___ ___ / ___ ___ ___ ___

Address	City	State	ZIP Code

Subcontractor

Contractors - Present this to your supplier in order to purchase the necessary materials tax exempt. Complete the Subcontractor portion if extending the certificate to your subcontractor. The contractor must sign the form in the space provided below.

Name of Purchasing Subcontractor			
Address	**City**	**State**	**ZIP Code**

Signature of Contractor	Contractor's Printed Name	Date (MM/DD/YYYY)
		___ ___ / ___ ___ / ___ ___ ___ ___

Taxation Division
P.O Box 358
Jefferson City, MO 65105-0358

Phone: (573) 751-2836
Fax: (573) 522-1271
E-mail: salestaxexemptions@dor.mo.gov

Visit **http://dor.mo.gov/business/sales/sales-use-exemptions.php** for additional information.

Missouri
Division of Labor Standards
WAGE AND HOUR SECTION

MICHAEL L. PARSON, Governor

Annual Wage Order No. 31

Section 048
JACKSON COUNTY

In accordance with Section 290.262 RSMo 2000, within thirty (30) days after a certified copy of this Annual Wage Order has been filed with the Secretary of State as indicated below, any person who may be affected by this Annual Wage Order may object by filing an objection in triplicate with the Labor and Industrial Relations Commission, P.O. Box 599, Jefferson City, MO 65102-0599. Such objections must set forth in writing the specific grounds of objection. Each objection shall certify that a copy has been furnished to the Division of Labor Standards, P.O. Box 449, Jefferson City, MO 65102-0449 pursuant to 8 CSR 20-5.010(1). A certified copy of the Annual Wage Order has been filed with the Secretary of State of Missouri.

Original Signed by
Todd Smith, Director
Division of Labor Standards

Filed With Secretary of State: **March 8, 2024**

Last Date Objections May Be Filed: **April 8, 2024**

Prepared by Missouri Department of Labor and Industrial Relations

Building Construction Rates for
JACKSON County

OCCUPATIONAL TITLE	**Prevailing Hourly Rate
Asbestos Worker	$69.50
Boilermaker	$39.44*
Bricklayer-Stone Mason	$62.06
Carpenter	$64.94
Lather	
Linoleum Layer	
Millwright	
Pile Driver	
Cement Mason	$58.02
Plasterer	
Communication Technician	$62.38
Electrician (Inside Wireman)	$70.32
Electrician Outside Lineman	$61.40
Lineman Operator	
Lineman - Tree Trimmer	
Groundman	
Groundman - Tree Trimmer	
Elevator Constructor	$93.11
Glazier	$59.07
Ironworker	$70.66
Laborer	$52.42
General Laborer	
First Semi-Skilled	
Second Semi-Skilled	
Mason	$50.24
Marble Mason	
Marble Finisher	
Terrazzo Worker	
Terrazzo Finisher	
Tile Setter	
Tile Finisher	
Operating Engineer	$66.05
Group I	
Group II	
Group III	
Group III-A	
Group IV	
Group V	
Painter	$54.25
Plumber	$78.88
Pipe Fitter	
Roofer	$60.69
Sheet Metal Worker	$76.38
Sprinkler Fitter	$69.92
Truck Driver	$54.27
Truck Control Service Driver	
Group I	
Group II	
Group III	
Group IV	

*The Division of Labor Standards received fewer than 1,000 reportable hours for this occupational title. The public works contracting minimum wage is established for this occupational title using data provided by Missouri Economic Research and Information Center.
**The Prevailing Hourly Rate includes any applicable fringe benefit amounts for each occupational title as defined in RSMo Section 290.210.

Heavy Construction Rates for
JACKSON County

Section 048

OCCUPATIONAL TITLE	**Prevailing Hourly Rate
Carpenter	$65.11
Millwright	
Pile Driver	
Electrician (Outside Lineman)	$90.71
Lineman Operator	
Lineman - Tree Trimmer	
Groundman	
Groundman - Tree Trimmer	
Laborer	$51.85
General Laborer	
Skilled Laborer	
Operating Engineer	$60.48
Group I	
Group II	
Group III	
Group IV	
Truck Driver	$53.04
Truck Control Service Driver	
Group I	
Group II	
Group III	
Group IV	

Use Heavy Construction Rates on Highway and Heavy construction in accordance with the classifications of construction work established in 8 CSR 30-3.040(3).

Use Building Construction Rates on Building construction in accordance with the classifications of construction work established in 8 CSR 30-3.040(2).

If a worker is performing work on a heavy construction project within an occupational title that is not listed on the Heavy Construction Rate Sheet, use the rate for that occupational title as shown on the Building Construction Rate Sheet.

*The Division of Labor Standards received fewer than 1,000 reportable hours for this occupational title. Public works contracting minimum wage is established for this occupational title using data provided by Missouri Economic Research and Information Center.

**The Prevailing Hourly Rate includes any applicable fringe benefit amounts for each occupational title.

OVERTIME
and
HOLIDAYS

OVERTIME

For all work performed on a Sunday or a holiday, not less than twice (2x) the prevailing hourly rate of wages for work of a similar character in the locality in which the work is performed or the public works contracting minimum wage, whichever is applicable, shall be paid to all workers employed by or on behalf of any public body engaged in the construction of public works, exclusive of maintenance work.

For all overtime work performed, not less than one and one-half (1½) the prevailing hourly rate of wages for work of a similar character in the locality in which the work is performed or the public works contracting minimum wage, whichever is applicable, shall be paid to all workers employed by or on behalf of any public body engaged in the construction of public works, exclusive of maintenance work or contractual obligation. For purposes of this subdivision, **"overtime work"** shall include work that exceeds ten hours in one day and work in excess of forty hours in one calendar week; and

A thirty-minute lunch period on each calendar day shall be allowed for each worker on a public works project, provided that such time shall not be considered as time worked.

HOLIDAYS

January first;
The last Monday in May;
July fourth;
The first Monday in September;
November eleventh;
The fourth Thursday in November; and
December twenty-fifth;

If any holiday falls on a Sunday, the following Monday shall be considered a holiday.

Statement of Compliance

(To be submitted with weekly payroll if not using form WH-347)

I hereby certify the following:

1) The payroll for the payroll period contains the information required to be provided under § 5.5 (a)(3)(ii) of Regulations, 29 CFR part 5, the appropriate information is being maintained under § 5.5 (a)(3)(i) of Regulations, 29 CFR part 5, and that such information is correct and complete;

2) That each laborer or mechanic (including each helper, apprentice, and trainee) employed on the contract during the payroll period has been paid the full weekly wages earned, without rebate, either directly or indirectly, and that no deductions have been made either directly or indirectly from the full wages earned, other than permissible deductions as set forth in Regulations, 29 CFR part 3;

3) That each laborer or mechanic has been paid not less than the applicable wage rates and fringe benefits or cash equivalents for the classification of work performed, as specified in the applicable wage determination incorporated into the contract.

Signature of Contractor or Subcontractor _____ Date

DIVISION OF LABOR STANDARDS

MISSOURI DEPARTMENT OF LABOR AND INDUSTRIAL RELATIONS
DIVISION OF LABOR STANDARDS

AFFIDAVIT
COMPLIANCE WITH THE PREVAILING WAGE LAW

I, _____, upon being duly sworn upon my oath state that: (1) I am the
(Name)

_____ of _____; (2) all requirements of
(Title) *(Name of Company)*

§§ 290.210 to 290.340, RSMo, pertaining to the payment of wages to workers employed on public works projects have been fully satisfied with regard to this company's work on _____,
(Name of Project)

(3) I have reviewed and am familiar with the prevailing wage rules in 8 CSR 30-3.010 to 8 CSR 30-3.060; (4) based upon my knowledge of these rules, including the occupational titles set out in 8 CSR 30-3.060, I have completed full and accurate records clearly indicating (a) the names, occupations, and crafts of every worker employed by this company in connection with this project together with an accurate record of the number of hours worked by each worker and the actual wages paid for each class or type of work performed, (b) the payroll deductions that have been made for each worker, and (c) the amounts paid to provide fringe benefits, if any, for each worker; (5) the amounts paid to provide fringe benefits, if any, were irrevocably paid to a trustee or to a third party pursuant to a fund, plan, or program on behalf of the workers; (6) these payroll records are kept and have been provided for inspection to the authorized representative of the contracting public body and will be available, as often as may be necessary, to such body and the Missouri Department of Labor and Industrial Relations; (7) such records shall not be destroyed or removed from the state for one year following the completion of this company's work on this project; (8) when in effect, the requirements of §§ 290.550 through 290.580, RSMo, pertaining to excessive unemployment were fully satisfied; and (9) there has been no exception to the full and complete compliance with the provisions and requirements of Annual Wage Order No. _____ Section _____ issued by the Missouri Division of Labor Standards and applicable to this project located in County, Missouri, and completed on the ____ day of

_____ _____

The matters stated herein are true to the best of my information, knowledge, and belief. I acknowledge that the falsification of any information set out above may subject me to criminal prosecution pursuant to §§290.340, 570.090, 575.040, 575.050, or 575.060, RSMo.

Signature

Subscribed and sworn to me this ____ day of _____ _____

My commission expires _____ _____.

Notary Public

Receipt by Authorized Public Representative

Work Change Directive No.

Date of Issuance:	Effective Date:
Owner:	Owner's Contract No.:
Contractor:	Contractor's Project No.:
Engineer: Crawford, Murphy & Tilly	Engineer's Project No.:
Project:	Contract Name:

Contractor is directed to proceed promptly with the following change(s):

Description:

Attachments: *[List documents supporting change]*

Purpose for Work Change Directive:

Directive to proceed promptly with the Work described herein, prior to agreeing to changes on Contract Price and Contract Time, is issued due to: *[check one or both of the following]*

☐ Non-agreement on pricing of proposed change.

☐ Necessity to proceed for schedule or other Project reasons.

Estimated Change in Contract Price and Contract Times (non-binding, preliminary):

Contract Price $ [increase] [decrease].

Contract Time days [increase] [decrease].

Basis of estimated change in Contract Price:

☐ Lump Sum ☐ Unit Price

☐ Cost of the Work ☐ Other

RECOMMENDED:	AUTHORIZED BY:	RECEIVED:
By:	By:	By:
Engineer (Authorized Signature)	Owner (Authorized Signature)	Contractor (Authorized Signature)
Title:	Title:	Title:
Date:	Date:	Date:

Approved by Funding Agency (if applicable)

By: Date:

Title:

Change Order No. _____

Date of Issuance:	Effective Date:
Owner:	Owner's Contract No.:
Contractor:	Contractor's Project No.:
Engineer: Crawford, Murphy & Tilly	Engineer's Project No.:
Project:	Contract Name:

The Contract is modified as follows upon execution of this Change Order:

Description:

Attachments: *[List documents supporting change]*

CHANGE IN CONTRACT PRICE	**CHANGE IN CONTRACT TIMES** *[note changes in Milestones if applicable]*
Original Contract Price: $_____	Original Contract Times: Substantial Completion: _____ Ready for Final Payment: _____ days or dates
[Increase] [Decrease] from previously approved Change Orders No. ___ to No. ___: $_____	[Increase] [Decrease] from previously approved Change Orders No. ___ to No. ___: Substantial Completion: _____ Ready for Final Payment: _____ days
Contract Price prior to this Change Order: $_____	Contract Times prior to this Change Order: Substantial Completion: _____ Ready for Final Payment: _____ days or dates
[Increase] [Decrease] of this Change Order: $_____	[Increase] [Decrease] of this Change Order: Substantial Completion: _____ Ready for Final Payment: _____ days or dates
Contract Price incorporating this Change Order: $_____	Contract Times with all approved Change Orders: Substantial Completion: _____ Ready for Final Payment: _____ days or dates

RECOMMENDED:	ACCEPTED:	ACCEPTED:
By: _____	By: _____	By: _____
Engineer (if required)	Owner (Authorized Signature)	Contractor (Authorized Signature)
Title: _____	Title _____	Title _____
Date: _____	Date _____	Date _____

Approved by Funding Agency (if applicable)

By: _____ Date:

Title: _____

Field Order No. _____

Date of Issuance:	Effective Date:
Owner:	Owner's Contract No.:
Contractor:	Contractor's Project No.:
Engineer: Crawford, Murphy & Tilly	Engineer's Project No.:
Project:	Contract Name:

Contractor is hereby directed to promptly execute this Field Order, issued in accordance with General Conditions Paragraph 11.01, for minor changes in the Work without changes in Contract Price or Contract Times. If Contractor considers that a change in Contract Price or Contract Times is required, submit a Change Proposal before proceeding with this Work.

Reference: _____ Specification(s) _____ Drawing(s) / Detail(s)

Description:

Attachments:

ISSUED:	RECEIVED:
By: _____ Engineer (Authorized Signature)	By: _____ Contractor (Authorized Signature)
Title: _____	Title: _____
Date: _____	Date: _____

Copy to: Owner

CITY OF GRAIN VALLEY

WATER TOWER UPGRADE

DIVISION 01 – GENERAL REQUIREMENTS

TABLE OF CONTENTS

SECTION NUMBER	SECTION TITLE	PAGE NUMBER
DIVISION 1 – GENERAL REQUIREMENTS		
01 01 10	Site Conditions	01 01 10 1-2
01 11 00	Summary of Project	01 11 00 1-4
01 20 00	Payment Procedures	01 20 00 1-3
01 22 00	Unit Prices	01 21 00 1-2
01 25 13	Product Substitution Procedures	01 25 13 1-3
01 26 00	Contract Modification Procedures	01 26 00 1-4
01 31 50	Mechanical and Electrical Coordination	01 31 50 1-5
01 32 01	Construction Schedules	01 32 01 1-2
01 33 00	Submittal Procedures	01 33 00 1-7
01 35 26	Safety Requirements and Protection of Property	01 35 26 1-4
01 42 20	Abbreviations	01 42 20 1-6
01 43 50	Manufacturers Services	01 43 50 1-2
01 45 00	Quality Requirements	01 45 00 1-5
01 50 00	Temporary Construction Facilities and Controls	01 50 00 1-8
01 51 13	Temporary Power	01 51 13 1-2
01 55 00	Vehicular Access and Parking	01 55 00 1-2
01 55 26	Traffic Control	01 55 26 1-2
01 56 00	Barriers	01 56 00 1-2
01 58 00	Licenses, Easements and Permits	01 58 00 1-2
01 60 00	Product Requirements	01 60 00 1-3
01 70 00	Cleaning	01 70 00 1-4
01 72 50	Field Engineering	01 72 50 1-2
01 75 00	Starting and Adjusting	01 75 00 1-2
01 76 00	Protecting Installed Construction	01 76 00 1-2
01 78 00	Closeout Procedures	01 78 00 1-5
01 78 10	Project Record Documents	01 78 10 1-3
01 78 23	Operation and Maintenance Manuals	01 78 23 1-7
01 79 00	Demonstration and Training	01 79 00 1-5
01 91 00	Commissioning	01 91 00 1-3

PART 1 GENERAL

1.01 RELATED DOCUMENTS

A. Drawings and general provisions of the Contract, including General and Supplementary Conditions and Division 01 Specification Sections, apply to this Section.

1.02 SUMMARY

A. The Contractor acknowledges that he has satisfied himself as to the nature and location of the work, the general and local conditions, particularly those bearing upon availability of transportation, disposal, handling and storage of materials, availability of labor, water, electric power, roads, and uncertainties of weather, or similar physical conditions at the site, the conformation and conditions of the ground, the character of equipment and facilities needed preliminary to and during the prosecution of the work and all other matters which can in any way affect the work or the cost thereof under this Contract.

1.03 INFORMATION ON SITE CONDITIONS

A. All information obtained by the Owner regarding site conditions, topography, subsurface information, groundwater elevations, existing construction of site facilities as applicable, and similar data will be available for inspection at the office of Crawford, Murphy & Tilly, Inc. upon request. Such information is offered as supplementary information only. Neither the Engineer nor the Owner assumes any responsibility for the completeness or for the Contractor's interpretation of such supplementary information.

1.04 CONTRACTOR'S RESPONSIBILITY FOR UTILITY PROPERTIES AND SERVICE

A. Before excavating, the Contractor shall call - Missouri One Call 811.

B. Where the Contractor's operations could cause damage or inconvenience to telephone, television, power, oil, gas, water, sewer, the Contractor shall make all arrangements necessary for the protection of these utilities and services.

C. The Contractor shall be solely and directly responsible to the Owner and operators of such properties for any damage, injury, expense, loss, inconvenience, delay, suits, actions, or claims of any character brought because of any injuries or damage which may result from the construction operations under this Contract.

D. Neither the Owner nor its officers or agents shall be responsible to the Contractor for damages as a result of the Contractor's failure to protect utilities encountered in the work.

E. The Contractor shall replace, at his own expense, any and all other existing utilities to existing structures removed or damaged during construction, unless otherwise provided for in these Contract Documents.

1.05 INTERFERING STRUCTURES

A. Take necessary precautions to prevent damage to existing structures whether on the surface, aboveground, or underground.

B. Access gate to the property shall always remain closed when not in use. Contact Patrick Martin (Grain Valley City Representative) or John Overstreet (general manager Tri-County Water Authority) for access. Access road shall not be blocked at anytime. Contractor shall build temporary access road to pump station if needed.

PART 2 PRODUCTS (NOT APPLICABLE)

PART 3 EXECUTION (NOT APPLICABLE)

END OF SECTION 01 01 10

PART 1 GENERAL

1.01 DESCRIPTION OF REQUIREMENTS

A. General:

1. The project name is Water Tower Upgrade as shown on the Contract Documents prepared by Crawford, Murphy & Tilly, Inc., Kansas City, Missouri.
2. Owner and Contractor each binds themself, their partners, successors, assigns and legal representatives to the other party hereto, their partners, successors, assigns and legal representatives in respect to all covenants, agreements and obligations contained in the Contract Documents.
3. Crawford, Murphy & Tilly, Inc., Consulting Engineers, 1100 Main Street Suite 1210, Kansas City, MO 64105, is hereinafter called Engineer and will have the right and authority assigned to Engineer in the Contract Documents in connection with completion of the Work in accordance with the Contract Documents.

B. General Description of the Work:

1. Sequencing of the construction operations shall be as indicated on the plans and shall be carried out in such a manner that will not interrupt the water distribution system operations without prior authorization from the Owner, the City of Grain Valley. The work includes, but is not limited to the following:
    a. Installation of new 1.0 MG composite elevated water tower.
    b. Installation, maintenance and removal of temporary fencing, and equipment protection.
    c. Associated site work including grading, piping, valves, electrical, etc.
    d. Testing, flushing and disinfection of new system and piping.
    e. Connection to existing distribution system.
    f. Training.
    g. Restoration.
2. Bid Alternate No. 1: Tri-County Water Authority Proposed Emergency Connection: Includes 240 LF of 16-inch to 24-inch DIP and connection to existing 24” DIP to Tri-County Water Authority on Tyer Road, 24” x 16” tee, street crossing, restraints, fittings, flushing and testing, connection to existing system, restoration, cleanup, hauling, asbuilt drawings, labor, bonds and insurance, mobilization, demobilization, etc. See Appendix D for plan sheet.

C. Summary by Reference:

1. The COMPLETE WORK can be summarized by reference to requirements of various contract documents, which in turn make reference to requirements of other applicable provisions which control or influence work; and these references can be summarized but are not necessarily limited to following:
    a. Executed Owner-Contractor Agreement.
    b. General and Supplementary Conditions, which are bound herewith.
    c. Drawings, which are listed in an "Index to Sheets" as of the date of these contract documents, and bound herewith as indicated on the cover sheet of the drawings.
    d. Specifications Sections, which are bound herewith and are listed in "Table of Contents" bound herewith.
    e. Addenda and Change Orders, which will be distributed by transmittal subsequent to binding hereof.
    f. Governing regulations, which have a bearing on performance of work; copies can be obtained from or reviewed at local, State or Federal Agency responsible for regulation in each case.
    g. Submittals of every kind, copies of which shall be retained by the Contractor on site.

1.02 EXTENT OF CONTRACT

A. Extent of contract shall be defined as shown on drawings and specified herein.

1.03 ASSIGNMENT OF CONTRACT

A. No assignment by a party hereto of any rights under or interests in the Contract Documents will be binding on another party hereto without the written consent of the party sought to be bound; and specifically but without limitation, moneys that may become due and moneys that are due may not be assigned without such consent (except to the extent that the effect of this restriction may be limited by law), and unless specifically stated to the contrary in any written consent to an assignment no assignment will release or discharge the assignor from any duty or responsibility under the Contract Documents.

1.04 SPECIFICATION AND DRAWING SECTIONS

A. Specifications and Drawings are separated into discipline sections for convenience or reference only. Each Contractor shall be responsible for Complete Work, implemented by his own forces and his various subcontractors. Each Contractor is responsible for coordination between subcontractors.

B. Further, it is not the intent that any work called out in a titled section be allocated to any specific trade. Allocation of this work to trades is considered a function of each Contractor.

C. Contractor shall also be responsible for work as specifically cross-referenced in other Sections of Specifications though not specifically mentioned herein and for all information shown on drawings as applicable to their portions of work.

1.05 CONTRACTOR RESPONSIBILITIES

A. The Contractor shall be fully responsible for Complete Work of all Contract Documents including, but not limited to, providing of labor, materials and equipment necessary to furnish and install complete work as described by Specifications, Divisions 1 thru 48, and as shown on Drawings.

B. The Contractor may fulfill certain parts of above obligation through several prime Subcontractors and other subcontractors. The Contractor shall be responsible for letting of subcontracts in such a manner as to produce Complete Work required by Contract Documents.

C. The Contractor shall employ, establish and identify all required administrative, supervisory and operational personnel; including personnel responsible for coordination of mechanical and electrical work, necessary for adequate performance of work. Do not change or replace established key personnel, during conduct of work. Furnish to Owner's representative, in writing, the names, addresses and telephone numbers of responsible persons employed by contractors who are to be contacted in event of an out-of-hours emergency at construction site. The Contractor shall provide a coordinator, in his employ, who shall coordinate all subcontracted work.

D. Contractor shall make the following representations as part of the contract Agreement:
   1. Contractor has familiarized themself with the nature and extent of the Contract Documents, Work, locality, and with all local conditions and federal, state and local laws, ordinances, rules and regulations that in any manner may affect cost, progress or performance of the Work.
   2. Contractor has studied carefully all reports of investigations and tests of subsurface and latent physical conditions at the site or otherwise affecting cost, progress or performance of the Work which were relied upon by Engineer in the preparation of the Drawings and Specifications and which have been identified in the Supplementary General Conditions.
   3. Contractor has made or caused to be made examinations, investigations and tests and studies of such reports and related data in addition to those referred to in paragraph 2 as they deems necessary for the performance of the Work at the Contract Price, within the Contract Time and in accordance with the other terms and conditions of the Contract Documents; and no additional examinations, investigations, tests, reports or similar data are or will be required by Contractor for such purposes.
   4. Contractor has correlated the results of all such observations, examinations, investigations, tests, reports and data with the terms and conditions of the Contract Documents.
   5. Contractor has given Engineer written notice of all conflicts, errors or discrepancies that they have discovered in the Contract Documents and the written resolution thereof by Engineer is acceptable to Contractor.

1.06 SCHEDULE

A. Contractor shall commence work as stated in the “Notice to Proceed" issued by Owner and in accordance with the schedule set forth in these Contract Documents.

B. Contractor shall submit, within five (5) calendar days of Notice to Proceed, a proposed schedule, sequence and description of methods of construction he proposes for work. This review shall in no way limit Contractor's means or methods of construction, nor shall it serve as an approval of Contractor's means or methods of construction. Contractor shall at all times be responsible for means and methods of construction and all consequences resulting from those operations as required by Contract Documents. The proposed schedule and sequence shall allow for coordination among the sub-contractors.

1.07 CONTRACT TIME

A. The Contractor shall complete all work in accordance with the contract per Agreement (Unit Price), Article 3, CONTRACT TIME.

1.08 SPECIAL SEQUENCES

A. Before work under this Contract is begun, Contractor shall confer with Engineer and Owner and agree on a sequence of procedure, means of access to premises; space for temporary storage of materials and equipment; cooperation with all trades and other work outside of this contract; and use of approaches.

B. Hours of operation of Owner’s facility are 8:00 AM to 5:00 PM, local time. If Contractor requires access to site outside these hours, he shall arrange access with Owner.

C. Unless otherwise approved by the Engineer and Owner, the work shall progress according to the following general sequence of construction.

PART 2 PRODUCTS (NOT APPLICABLE)

PART 3 EXECUTION (NOT APPLICABLE)

END OF SECTION 01 11 00

PART 1 GENERAL

1.01 SUMMARY

A. Section Includes
   1. Procedures for preparation and submittal of schedule of values and applications for payment.

B. Related Requirements
   1. Document 00 62 76 – Contractor's Application for Payment.
   2. Section 01 26 00 – Contract Modification Procedures: Procedures for changes to the Work.
   3. Section 01 32 01 – Construction Schedules.
   4. Section 01 33 00 – Submittal Procedures: Procedural requirements for submittals.
   5. Section 01 78 00 – Closeout Procedures: Final payment.

1.02 SCHEDULE OF VALUES

A. Contractor shall submit Schedule of Values:
   1. Submit to Engineer, Schedule of Values at least 14 days prior to submitting first Application for Payment.
   2. Upon request by Engineer, support values given with data that will substantiate their correctness.
   3. List separate values of designated materials and labor to install item.
   4. List values of each item of work by subcontractors and suppliers.
   5. Use Schedule of Values only as basis for Contractor's Application for Payment.

B. Form of Submittal:
   1. Submit typewritten Schedule of Values on page 2 of Document 00 62 76 – Contractor's Application for Payment "Progress Estimate – Unit Price Work".
   2. Use Bid Booklet Table of Contents as basis of format for listing costs of work for Sections under Division 2-48. Include labor separate from material cost.
   3. Identify each line item with a title as listed in Bid Booklet Table of Contents and with name of subcontractor or supplier.

C. Update:

1. Update Schedule of Values when:
   a. Directed by Engineer.
   b. Change of subcontractor or supplier occurs.
   c. Change or product or equipment occurs.
2. Send separate letter of notification to Engineer explaining reason for change to schedule of values.

1.03 PAYMENT APPLICATIONS

A. Present required information in legible form on Document 00 62 76 – Contractors Application for Payment.

B. Execute certification by signature of authorized officer.

C. Use itemized breakdown data from approved Contractor's Schedule of Values. Provide dollar value in each column for each line item for portion of Work Completed and for Material Stored.

D. List each authorized Change Order as an extension Pay Application Continuation Sheet, listing Change Order number and dollar amount as for an original item of Work.

E. Prepare Application for Final Payment as specified in Section 01 78 00 – Closeout Procedures.

1.04 SUBMITTAL PROCEDURES

A. Submit four (4) copies of each Application for Payment.

B. Submit the draft Application for review and approval by the Engineer on or before the 10th of each month.

C. Upon review and approval of the application for payment by the Engineer by the 15th of the month, the application will be forwarded to the Owner for authorizing the payment at its monthly Board meeting .

D. Upon approval of the application by the Board, the application will be submitted to the City for payment.

E. Following payment of the amount approved by Owner, the Owner will make the disbursement to the Contractor.

F. Submit an updated construction schedule with each Application for Payment.

1.05 SUBSTANTIATING DATA

A. When Engineer requires substantiating information, submit data justifying dollar amounts in question.

B. Provide one (1) copy of data with cover letter for each copy of submittal. Show application number and date, and line item by number and description.

C. Include the following with the application:

1. Partial release of liens from major subcontractors and vendors related to work covered by previous payment and from contractor for current payment.
2. Construction progress schedules, revised and current as specified in Section 01 32 01 – Construction Schedules.

PART 2 PRODUCTS – NOT USED

PART 3 EXECUTION – NOT USED

END OF SECTION 01 20 00

PART 1 GENERAL

1.01 SUMMARY

A. Contractor shall provide unit prices in the Bid Form for specified items.

1.02 RELATED SECTIONS

A. Specified elsewhere:
   1. BF - Bid Form
   2. Section 00 70 00 - General Conditions
   3. Section 01 20 00 - Payment Procedures
   4. Section 01 26 00 - Contract Modification Procedures

1.03 DEFINITIONS

A. Unit Price. Unit price is a fixed price, including all overhead, profit and all other costs of any nature and character, for a specified unit of work. Unit prices in the Bid Form, when accepted by Owner and incorporated into the Contract, shall be the same for additional, deducted or omitted units of work.

1.04 PROCEDURES

A. Unit prices include all necessary material, plus cost for delivery, installation, insurance, overhead, and profit.

B. Measurement and Payment: Refer to individual Specification Sections for work that requires establishment of unit prices. Methods of measurement and payment for unit prices are specified in those Sections.

C. Owner reserves the right to reject Contractor's measurement of work-in-place that involves use of established unit prices and to have this work measured, at Owner's expense, by an independent surveyor acceptable to Contractor.

D. List of Unit Prices: A list of unit prices is included in Part 3 of this Section. Specification Sections referenced in the schedule contain requirements for materials described under each unit price.

PART 2 PRODUCTS – NOT USED

PART 3 EXECUTION

3.01 APPLICATION

A. Enter unit prices for each work item in Bid Form in space provided. Omission will result in rejection of bid.

B. Multiply the specified estimated quantity times the unit price bid and enter the product in the column provided for extensions. The total of all extensions is included in the Unit Price Bid.

C. Actual quantities shall be determined by Engineer and Owner during the execution of the contract.

D. Quantities greater than the estimated quantities shall be paid per the same unit price in the Bid Form as a Change Order.

E. Quantities less than the estimated quantities shall be deducted from the contract amount per the same unit price in the Bid Form as a Change Order.

F. Owner reserves the right to delete quantities from the contract at no change to any other unit price or lump sum contract amount.

G. Owner may make written request for additional unit prices throughout the Contract when it is deemed appropriate to meet project requirements. The Contractor shall supply all unit prices within five business days after date of request.

3.02 UNIT PRICE ITEM

A. Unit Price No. 1 – New 1.0 MG Composite Elevated Water Storage Tower
   1. Description: Includes design, shop drawing submittal, foundation design and construction, tank installation, piping, valves, flushing and testing, ladders, mixer, doors, connection to yard piping, cleanup, hauling, asbuilt drawings, labor, bonds and insurance, mobilization, demobilization, etc.
   2. Unit of Measurement: Lump Sum

B. Unit Price No. 2 – Yard Piping
   1. Description: Includes yard piping, valves, tees, bends, connection to tank piping, street crossing, fire hydrants, valves, plugs, restraints, fittings, flushing and testing connection to existing system, cleanup, hauling, asbuilt drawings, labor, bonds and insurance, mobilization, demobilization, etc.
   2. Unit of Measurement: Lump Sum

C. Unit Price No. 3 – Electrical
   1. Description: Includes all electrical components in water tower, lighting, SCADA, equipment, labor, testing, coordination, etc.
   2. Unit of Measurement: Lump Sum

D. Unit Price No. 4 – Painting
   1. Description: Includes preparation of tank and tank painting with logo.
   2. Unit of Measurement: Lump Sum

E. Unit Price No. 5 – Restoration

1. Description: Includes all restoration consisting of seeding, sodding, street restoration, gravel driveway, labor, hauling, curb and sidewalk restoration, fence removal and replacement, bonds and insurance, mobilization, demobilization, etc.
2. Unit of Measurement: Lump Sum

F. Unit Price No. 6 - Bid Alternate No. 1: Tri-County Water Authority Proposed Emergency Connection

a. Description: Tri-County Water Authority Proposed Emergency Connection: Includes 240 LF of 16-inch to 24-inch DIP and connection to existing 24" DIP to Tri-County Water Authority on Tyer Road, 24" x 16" tee, street crossing, restraints, fittings, flushing and testing, connection to existing system, restoration, cleanup, hauling, asbuilt drawings, labor, bonds and insurance, mobilization, demobilization, etc. See Appendix D for plan sheet.
b. Unit of Measurement: Lump Sum

END OF SECTION 01 22 00

PART 1 GENERAL

1.01 SUMMARY

A. Section Includes:
1. Procedures and requirements for proposing product substitutions during bidding and construction.
2. General rules and procedures for evaluation of proposed substitutions.

B. Related Requirements:
1. Instructions to Bidders
2. Section 00 43 25 – Proposed Product Substitutions
3. Section 00 63 33 – Substitution Request
4. Section 00 70 00 – General Conditions
5. Section 01 26 00 – Contract Modification Procedures
6. Section 01 33 00 – Submittal Procedures

C. Unless expressly stated otherwise, proposed product substitutions must meet the specified product requirements including the requirements implied by the proprietary designation of a product that establishes the quality, performance, function, dimension, and appearance of the product specified.

1.02 SUBSTITUTIONS PROPOSED WITH BID

A. List substitutions in Proposal according to Instructions to Bidders.

B. Proposed substitutions will be evaluated in accordance with Instructions to Bidders.

1.03 SUBSTITUTIONS PROPOSED DURING CONSTRUCTION

A. No substitutions shall be considered after Notice of Award except under one or more of the following conditions:
1. Substitutions required for compliance with requirements of governing authority, final interpretations of code requirements, or insurance regulations.
2. Specified product is unavailable or cannot be provided within Contract Time through no fault of Contractor.
3. Subsequent information discloses inability of specified product to perform properly or to fit in designated space.
4. Manufacturer refusal to certify or guarantee performance of specified product as specified.
5. Substitution would be substantially in Owner's best interests.

1.04 SUBSTITUTION REQUIREMENTS

A. Submit Substitution requests in the form and in accordance with procedures required for Change Order Proposals.

B. Submit four (4) copies of each request for substitution for consideration.

C. Request for substitution will be considered if received within sixty (60) days after commencement of work. Requests received more than sixty (60) days after commencement of work may be considered or rejected at discretion of Engineer.

1.05 CONTENTS OF SUBSTITUTION PROPOSAL

A. Complete Substitution Request contained in Section 00 63 33 – Product Substitution Request. Include information noted below.

B. Include related Specification Section and Drawing numbers.

C. Include complete data substantiating the following:
   1. Compliance of proposed substitution with Contract Documents.
   2. Conformance of proposed Substitution to requirements specified for product listed in Contract Documents.
   3. Equivalence of proposed Substitution to the requirements implied by the proprietary designation of the product listed in the Contract Documents.

D. Include complete product identification, including supplier’s and manufacturer's name, address, telephone number, fax number and email address.

E. Include the following manufacturer's literature:
   1. Product description.
   2. Performance and test data.
   3. Reference standards.

F. Include samples when requested or appropriate.

G. Include name and address of similar projects on which product was used and date of installation.

H. Include itemized comparison of proposed substitution with product specified.

I. Include detailed description of changes in construction schedule.

J. Include description of effect of proposed substitution on overall Contract Time.

K. Include description of changes or coordination required.

L. Include accurate cost data on proposed substitution in comparison with product specified, including a proposal of net change, if any, in Contract Sum.

M. Include Certification by Contractor that substitution proposed is equal to or better in every significant respect to that required by Contract Documents, and that it will perform adequately in application indicated.

N. Include Contractor's waiver of rights to additional payment or time, which may subsequently become necessary because of failure of substitution to perform adequately.

1.06 REPRESENTATIONS IMPLIED BY SUBSTITUTION PROPOSAL

A. In making request for Substitution, Contractor represents:
   1. Contractor has personally investigated proposed product and determined that it is equal or superior in all respects to the specified product.
   2. Contractor shall provide the same guarantee for the Substitution as for the product specified.
   3. Contractor shall coordinate installation of accepted substitutions in work, making all changes for work to be complete in all respects.
   4. Cost data furnished is complete and includes all related costs under Contract, but excludes:
      a. Engineer redesign.
      b. Administrative costs of Engineer.
   5. Contractor shall pay all additional costs and expenses for Owner and Engineer as required by General Conditions.

B. In listing Substitutions in Proposal, Bidder makes representations equivalent to those listed for Contractor above.

1.07 SUBSTITUTION WILL NOT BE CONSIDERED WHEN:

A. Substitution Proposal does not meet the requirements of this Section.

B. Substitution is indicated or implied on shop drawings or product data submittals without formal request submitted in accordance with this section.

C. Acceptance will require substantial revision of Contract Documents.

D. Request is not directly related to an "or equal" clause or similar language in Contract Documents.

1.08 SUBSTITUTION EVALUATION

A. Within two (2) weeks of receipt of request for substitution, Engineer will request additional information or documentation necessary for evaluation of request.

B. Within two (2) weeks of receipt of request, or receipt of the additional information or documentation, whichever is later, Engineer will notify Contractor of acceptance or rejection of proposed substitution.

C. If a decision on use of a proposed substitute cannot be made or obtained within time allocated, use product specified.
D. Acceptance will be in form of a Work Directive Change or Change Order.

PART 2 PRODUCTS – NOT USED

PART 3 EXECUTION – NOT USED

END OF SECTION 01 25 13

PART 1 GENERAL

1.01 SUMMARY

A. This section specifies administrative and procedural requirements for handling and processing contract modifications and includes:

1. Procedural Requirements for:
   a. Request for Interpretation
   b. Field Order
   c. Work Change Directive
   d. Change Order

1.02 RELATED SECTION

A. Document 00 63 13 – Request for Interpretation
B. Document 00 70 00 – General Conditions
C. Document 00 80 00 – Supplementary Conditions
D. Document 00 94 00 – Work Change Directive
E. Document 00 94 20 – Field Order
F. Section 01 20 00 – Payment Procedures
G. Section 01 32 01 – Construction Schedules
H. Section 01 78 10 – Project Record Documents

1.03 DEFINITIONS

A. Request for Interpretation: A formal, written request from Contractor for clarification by Engineer about an item of work insufficiently described or detailed in the Contract Documents.

1.04 SUBMITTALS

A. Submit name of the individual authorized to receive change documents.

B. Be responsible for informing others in Contractor's employ or Subcontractors of changes to the Work.

C. Use the appropriate submittal forms:

1. Work Directive Change: Document 00 94 00 – Work Directive Change.

2. Request for Interpretation Document 00 63 13 – Request for Interpretation.

3. Field Order: Document 00 94 20 – Field Order.

1.05 REQUEST FOR INTERPRETATION (RFI)

A. Address all RFI correspondence to city and Design Professional:

City of Grain Valley
711 Main Street
Grain Valley, MO 64029

Crawford, Murphy & Tilly, Inc.
1100 Main Street Suite 1210
Kansas City, MO 64105

B. Submit completed form that includes sufficiently detailed descriptive information and signature of Contractor's authorized representative.

C. Number each RFI in consecutive sequence starting with number 1.

D. Engineer will respond to RFI with one or more of the following:
   1. Response written on RFI form.
   2. Field Order.
   3. Proposal Request.

1.06 DOCUMENTATION OF CHANGE IN CONTRACT PRICE AND CONTRACT TIME

A. Provide full information required for evaluation of proposed changes, and to substantiate costs of changes in the Work.

B. Document each quotation for a change in cost or time with sufficient data to allow evaluation of the quotation.

C. Provide additional data to support computations:
   1. Quantities of products, labor, and equipment.
   2. Taxes, insurance, and bonds.
   3. Overhead and profit.
   4. Justification for any change in Contract Time.
   5. Credit for deletions from Contract, similarly documented.

D. Support each claim for additional costs, and for work done, with additional information:
   1. Origin and date of claim.
   2. Dates and times work was performed, and by whom.
   3. Time records and wage rates paid.
   4. Invoices and receipts for products, equipment, and subcontracts, similarly documented.

1.07 CHANGE PROCEDURES

A. The Engineer will advise of minor changes in the Work not involving an adjustment to Contract Price or Contract Time as authorized by Paragraph 11.01

of the General Conditions by issuing supplemental instructions on Document 00 94 20 – Field Order.

B. The Engineer may issue a Proposal Request which includes a detailed description of a proposed change with supplementary or revised Drawings and specifications, a change in Contract Time for executing the change with a stipulation of any overtime work required and the period of time during which the requested price will be considered valid. Contractor will prepare and submit an estimate within 14 days.

1.08 WORK DIRECTIVE CHANGE

A. Engineer may issue a document, signed by the Owner, instructing the Contractor to proceed with a change in the Work, for subsequent inclusion in a Change Order.

1. The document will describe changes in the Work, and will designate method of determining any change in Contract Price or Contract Time.
2. Promptly execute the change in Work.

1.09 STIPULATED PRICE CHANGE ORDER

A. Based on Proposal Request and Contractor's fixed price quotation.

1.10 UNIT PRICE CHANGE ORDER

A. For pre-determined unit prices and quantities, the Change Order will be executed on a fixed unit price basis.

B. For unit costs or quantities of units of work, which are not pre-determined, execute Work under a Work Directive Change.

C. Changes in Contract Price or Contract Time will be computed as specified in General Conditions.

1.11 ALLOWANCES

A. Allowance Adjustment: To adjust allowance amounts, base each Change Order proposal on the difference between purchase amount and the allowance, multiplied by final measurement of work-in-place. If applicable, include reasonable allowances for cutting losses, tolerances, mixing wastes, normal product imperfections, and similar margins.

1. Include installation costs in purchase amount only where indicated as part of the allowance.
2. If requested, prepare explanation and documentation to substantiate distribution of overhead costs and other margins claimed.
3. Submit substantiation of a change in scope of work, if any, claimed in Change Orders related to unit-cost allowances.
4. Owner reserves the right to establish the quantity of work-in-place by independent quantity survey, measure, or count.

B. Submit claims for increased costs because of a change in scope or nature of the allowance described in the Contract Documents, whether for the Purchase Order

amount or Contractor's handling, labor, installation, overhead, and profit. Submit claims within thirty (30) days of receipt of the Change Order or Construction Change Directive authorizing work to proceed. Owner will reject claims submitted later than thirty (30) days after such authorization.

1. Do not include Contractor's or subcontractor's indirect expense in the Change Order cost amount unless it is clearly shown that the nature or extent of work has changed from what could have been foreseen from information in the Contract Documents.
2. No change to Contractor's indirect expense is permitted for selection of higher- or lower-priced materials or systems of the same scope and nature as originally indicated.

1.12 TIME AND MATERIAL CHANGE ORDER

A. Submit itemized account and supporting data after completion of change, within time limits included in the General Conditions.

B. Engineer will determine the change allowable in Contract Price and Contract Time as provided in the Contract Documents.

C. Maintain detailed records of work performed.

D. Provide full information required for evaluation of proposed changes, and to substantiate costs for changes in the Work.

1.13 EXECUTION OF CHANGE ORDERS

A. Engineer will issue Change Orders for signatures of parties as provided in the General Conditions.

B. No work will be paid for if done prior to receiving a properly executed Change Orders.

1.14 CORRELATION OF CONTRACTOR SUBMITTALS

A. Promptly revise Schedule of Values and Application for Payment forms to record each authorized Change Order as a separate line item and adjust the Contract Price.

B. Promptly revise progress schedules to reflect any change in Contract Time, revise sub-schedules to adjust times for other items of work affected by the change, and resubmit.

C. Promptly enter changes in Project Record Documents.

PART 2 PRODUCTS – NOT USED

PART 3 EXECUTION – NOT USED

END OF SECTION 01 26 00

PART 1 GENERAL

1.01 REQUIREMENTS INCLUDE

A. Drawings and general provisions of Contract, including General and Supplementary Conditions and Division 1 Specification Sections, apply to work of this Section. Mechanical and Electrical work shall include all applicable requirements of the Contract Documents.

B. Each bidder shall examine premises and satisfy himself as to existing conditions under which he will be obliged to operate in performing his work under this contract. Verify measurements of new work by actual observation at building site(s).

C. Confer with other trades regarding location and size of pipes, equipment, fixtures, conduit, openings, switches, outlets, etc., in order that there may be no interferences between installation or progress of work of any Contractor on project.

D. Electrical Drawings shall be followed as closely as actual construction of work of other trades will permit. Changes from Drawings necessary to make work of each Contractor conform to building construction and work of other trades shall be done at appropriate Contractor's expense.

E. Unless specified otherwise, furnish and install each item of equipment or material hereinafter specified, complete with necessary fittings, supports, trim, piping, insulation, etc., as required for complete and operating installation.

F. Equipment and materials shall be installed according to manufacturer's written instructions unless otherwise specified.

G. References to "Contractors" in Division 22, and 26 Specifications and Drawings shall refer to respective Subcontractor.

1.02 RELATED REQUIREMENTS

A. Specified elsewhere:

1. Division 1 - General Requirements
2. Section 01 33 00 - Submittal Procedures
3. Division 2 - Sitework
4. Division 09 -Finishes
5. Division 22 - Plumbing
6. Division 26 - Electrical

1.03 SPACE REFERENCE

A. Carefully verify and coordinate location and level of pipes, conduits, etc. Run preliminary levels and coordinate with other Contractors so that conflicts in locations may be avoided. Where conflicts occur, the following preference schedule shall be followed:

1. Recessed electrical light fixtures.
2. Vent piping.
3. Domestic water piping.
4. Electric conduits.

B. However, no piping conveying fluids shall be installed directly over electrical equipment.

1.04 STANDARDS, LAWS AND ORDINANCES

A. Supplementing requirements of General Conditions for compliance with laws and ordinances Work shall meet or exceed requirements of the following:

1. Plumbing: Missouri Plumbing Code, current edition.
2. Electrical Equipment and Wiring: NEC, current edition.

B. Where laws require, obtain written approval of systems (such as fire alarm) from major authorities before ordering equipment.

1.05 PERMITS AND FEES

A. Each Contractor shall obtain and pay for permits, deposits, fees, inspections, service installations, etc., required by utility companies, municipalities, etc., for their respective part of work. These shall include, but are not necessarily limited to: water, electrical, etc.

B. Where inspections of work are required by local or state authorities, notify same at appropriate times for inspections. Obtain certificates of inspection by such authorities and submit same (in triplicate) before final certificate for payment is issued.

C. Mount certificate of inspection in building, framed under glass, at location specified by proper authority.

1.06 OPERATION AND MAINTENANCE OF EQUIPMENT

A. Each Contractor shall be responsible for operation, maintenance and safety of equipment furnished by him and shall make necessary repairs and do necessary maintenance required to maintain equipment in first class condition until it is accepted in writing by Owner or Owner’s Representative.

B. Where such equipment is operated by Owner (or the Contractors), Owner (or other Contractor) shall be solely responsible for operation and safety of such equipment.

C. Maintenance work shall include, but is not limited to:

1. Lubrication.
2. Adjustments.

1.07 GROUNDING

A. Electrically powered equipment shall be grounded per Division 26 and NEC.

B. Contractor who furnishes non-electrically powered roof mounted equipment such as vents, etc. shall ground equipment as required by NEC and NFPA.

1.08 ACCESS PANELS

A. Access panels shall be of sufficient size to make possible servicing, adjustment, removal, and replacement of concealed equipment through opening provided.

B. Submit shop drawings for approval before ordering panels. Where fire rating is required, furnish B label doors.

1.09 COORDINATION DRAWINGS

A. Drawings shall be 1/4" = 1'-0" minimum scale, but larger where required. Drawings shall show to scale plumbing and electrical work involved including equipment, devices, hangers, conduit, pipes, openings and sleeves in construction, clearances, access, etc.

B. All other Contractors shall furnish shop drawings and other necessary roughing-in data required to prepare coordination drawings.

C. All other Contractors shall each approve coordination drawings in writing before they are submitted. Submit 3 sepia drawings for approval in same manner as shop drawings. Approved drawings shall be binding on each Contractor. Drawings shall be prepared well in advance of masonry and concrete work.

1.10 OWNER INSTRUCTION

A. After systems are fully operational, instruct Owner's representative in operation and maintenance of these systems. This service shall include:

Specification	Minimum No. of Trips to Project	Minimum Total Hours of Instruction Per Trip
Plumbing	4	4
Electrical	2	4

B. Hereinafter specified instructional time by manufacturer's representatives for special systems shall be in addition to above specified instructional time.

C. Notify Engineer seven days in advance so they can be present at instruction sessions.

D. Contractor shall submit an INSTRUCTION CERTIFICATION LETTER prepared by Contractor and signed by Owner and Contractor certifying that above Instruction has been satisfactorily completed.

1.11 PAINTING

A. Paint the following with rust inhibitive paint at time of fabrication to stop rusting, whether exposed or concealed, insulated or uninsulated:

1. Welds to building structural members.
2. Welds on pipes without insulation.
3. Supplementary steel supports.

B. Each Contractor shall touch up all damaged or chipped paint on materials furnished by him.

C. All other painting and all finish painting of mechanical and electrical equipment, materials, etc., will be performed by General Contractor. See Division 9 -- Finishes. Leave materials and equipment clean, dust-free, and ready for paint.

1.12 PROTECTIVE COVERING

A. Furnish and install suitable covering and protection for equipment, devices and materials, etc. stored or set-in-place on project.

B. Coverings shall prevent damage to same from mortar, plaster, paint or other construction procedures or debris.

C. A 6 mil polyethylene covering securely attached will be acceptable in most cases.

D. Equipment nameplates shall especially be protected from damage or defacement.

1.13 CLEANING

A. Contractor shall, at all times, keep premises free from accumulations of waste material or rubbish caused by his employees or work. At completion of each day's work, remove rubbish from about building. At completion of project, remove rubbish and tools, scaffolding, surplus materials, etc.

B. At completion, clean surfaces of paint, plaster, mortar, stains, paper labels, stickers, dust, grime, etc. Take care that no surfaces are scratched, marred or damaged in cleaning.

C. See Section 01 70 00 -- Cleaning.

1.14 FINAL INSPECTION

A. Final inspection will be made after Contractor certifies in writing that work is 100% complete.

B. "Final Inspection" will be made with Contractor and his major Subcontractors in attendance. Contractor shall demonstrate dynamic systems.

C. Inspection report describing incomplete/or unacceptable work shall be prepared.

D. After incomplete or unacceptable work is 100% corrected Contractor shall so certify in writing.

E. One "Follow-up Inspection" will be made with Contractor and major Subcontractors in attendance.

F. Should Architect/Engineer be required to perform reinspections due to failure of work to comply with claims of status of completion made by Contractor:

1. Owner will compensate Architect/Engineer for such additional services.
2. Owner will deduct amount of such compensation from final payment to Contractor.

G. See Section 01 78 00 Closeout Procedures.

PART 2 PRODUCTS - NOT APPLICABLE

PART 3 EXECUTION – NOT APPLICABLE

END OF SECTION 01 31 50

PART 1 GENERAL

1.01 SUMMARY

A. Construction schedule requirements and procedures.

B. RELATED SECTIONS
   1. Section 01 33 00 – Submittal Procedures.

1.02 FORM OF SCHEDULES

A. Prepare a standard horizontal bar chart.
   1. Provide separate horizontal bar column for each class of work, activity or long-lead equipment item.
   2. Columns should follow table of contents of the specifications.
   3. Critical path work items shall be highlighted in some manner.

1.03 CONTENT OF SCHEDULES

A. Indicate complete sequence of construction by activity.
   1. Submittals: In accordance with Section 01 33 00 - Submittal Procedures.
      a. Submittal dates.
      b. Dates when reviewed copies will be required.
   2. Product procurement date, fabrication time and delivery dates.
   3. Dates for beginning, and completion of, each element of construction.

B. Indicate cumulative percentage of work completed as of first day of each month.

C. Furnish separate schedule, showing submittals, review item, procurement schedules and delivery dates as required.

D. Define critical portions of entire schedule.

1.04 UPDATING

A. Update monthly. Indicate:
   1. Progress of each activity since previous submission.
   2. Projected completion dates for all activities.
   3. Activities modified since previous submission.

1.05 SUBMITTALS

A. Submit initial schedule at the preconstruction meeting.
   1. The Engineer and Owner shall review schedules and return reviewed copy within ten (10) business days after receipt.
   2. When directed, resubmit within five business days after return of reviewed copy.

B. Submit monthly updated schedules accurately depicting progress to first day of each month.

1.06 DISTRIBUTION

A. Distribute copies of approved schedules by uploading into Bluebeam Revu software and distribute to Subcontractors and suppliers on as-needed basis.

B. Instruct recipients to report any inability to comply with projected completion dates, and to furnish a detailed explanation together with suggested remedies.

1.07 ACCELERATION

A. If at any time during the project Contractor fails to complete an activity by its latest scheduled completion date, which late completion will impact the end date of the work past the Contract completion date, submit within five (5) calendar days plans to reorganize the work force to return to the current schedule.

B. The Owner may require Contractor to add to equipment, or construction forces, as well as increase working hours, if operations fall behind schedule at any time.

C. Addition of equipment or construction forces, increasing working hours, or other method, manner, or procedure to return to the contractually required completion date will not be justification for Contract modification.

D. Contractor shall plan, schedule, and coordinate construction operations and activities in a manner that will facilitate simultaneous progress of work.

PART 2 PRODUCTS – NOT USED

PART 3 EXECUTION – NOT USED

END OF SECTION 01 32 01

PART 1 GENERAL

1.01 SUMMARY

A. Section Includes: Submittal procedures and general requirements for submittals during the progress of the work.
   1. Administrative Submittals
   2. Shop Drawings
   3. Product Data
   4. Certificates of Compliance
   5. O & M Manuals
   6. Record Documents
   7. Contractor's Construction Schedule
   8. Subcontract List
   9. Applications for Payment
   10. Schedule of Values
   11. List of items to be completed or corrected (punch list)

B. The Owner and Engineer each reserve the right to direct and modify the procedures and requirements for submittals as necessary to accomplish the specific purpose of each submittal.

C. Electronic copies of CAD Drawings of the Contract Drawings will not be provided by Engineer for Contractor's use in preparing submittals.

1.02 RELATED SECTIONS

A. Section 00 70 00 – General Conditions
B. Section 00 80 00 – Supplementary Conditions
C. Section 01 20 00 – Payment Procedures
D. Section 01 45 00 – Quality Requirements
E. Section 01 78 00 – Closeout Procedures
F. Section 01 78 10 – Project Record Documents
G. Section 01 78 23 – Operation and Maintenance Data
H. Section 01 91 00 – Commissioning
I. Divisions 2 through 48 Sections for specific requirements for submittals in those Sections

1.03 DEFINITIONS

A. Action or Technical Submittals: Written and graphic information that requires Engineer's responsive action.

B. Administrative Submittals: Written information that does not require Engineer's responsive action. Submittals may be rejected for not complying with requirements.

1.04 ADMINISTRATIVE SUBMITTALS

A. Administrative Submittals include the following items:
   1. Preconstruction submittals.
   2. Schedules.
   3. Certificates and Certifications.
   4. Test and inspection reports.
   5. Construction photographs.
   6. Meeting minutes.
   7. Material Safety Data Sheets (MSDSs).
   8. Closeout submittals.

B. Provide all of the submittals as listed above and any others specifically required in other parts of the Contract Documents in portable document format (pdf).

C. Failure to comply promptly with requirements for submittals, as required by law, to applicable federal, state, or local agencies may result in the withholding of progress payments and make the Contractor liable for other prescribed action and sanctions.

D. Submit to the Owner and Engineer a copy of all letters relative to the Contract, transmitting notifications, reports, certifications, payrolls, and the like, that are submitted directly to a federal, state, or other governing agency.

E. On a daily basis during the progress of the Work, maintain, and submit to the Engineer, full and correct information as to:
   1. The number of persons employed in connection with each subdivision of the Work.
   2. The classification, rate of pay, citizenship status, and address of each of these persons.
   3. The cost, source, and amount of each class of materials delivered, equipment received, and major construction equipment used in each subdivision of the Work.

F. When requested by the Engineer, submit to the Engineer two (2) copies of each purchase order for all materials and equipment furnished under this Contract for incorporation in the Work. Each purchase order shall show:
   1. Supplier's name.
   2. Manufacturer's name.
   3. Materials, type, model number, size, quantity, accessory list of the material and equipment ordered.
   4. Requested delivery date of the material and equipment ordered.

1.05 TECHNICAL SUBMITTALS

A. General:
   1. Requirements in this section are in addition to any specific requirements for submittals specified in other Divisions and Sections of the Specifications. The Contractor shall be responsible for the accuracy and completeness of all information contained in each submittal.

1. Address all hard copies of submittals and correspondence to:

   City of Grain Valley
   711 N Main Street
   Grain Valley, Missouri 64029

   Crawford, Murphy & Tilly, Inc.
   1100 Main Street, Suite 1210
   Kansas City, MO 64105

2. Submit descriptive information, which will enable the Engineer to advise the Owner whether the Contractor's proposed materials, equipment, or methods of work are in general conformance to the design concept and in compliance with the Drawings and Specifications.
3. Submit Shop Drawings and Product Data for all material and equipment to be incorporated into the Work, whether or not specifically called for elsewhere in these Contract Documents. The information to be submitted shall consist of drawings, specifications, descriptive data, certificates, samples, test results, design calculations, fabrication and installation drawings, and such other information, all as required by the Engineer to evaluate the material and equipment for compliance with the requirements of these Contract Documents.
4. Equipment and materials delivered without meeting the above requirements **will not** be considered for pay requests involving the installation of said equipment and materials until the above information is received, reviewed and approved by the Engineer.
5. The Contractor shall be responsible for the accuracy and completeness of the information contained in each and every submittal and shall assure that the material, equipment or method of work shall be as described in the submittal. The Contractor shall indicate by a signed stamp on each submittal that:
   1. Contractor has checked and approved the submittal.
   2. Material and equipment described in the submittal conforms to the requirements of the Specifications and Drawings.
   3. Material and equipment described in the submittal have been checked for dimensions and coordination with other work.
6. If the information contained in a submittal shows deviations from the Specifications or Drawings, include in the submittal verification that there is no conflict with portions of the Work covered by other submittals and notify the Engineer in each and every case where the submittal may affect the work of another Contractor or the Owner.
7. Ensure coordination of submittals among the related crafts and subcontractors.
8. Should the Contractor fail to submit acceptable shop drawings on the second submittal, the cost of the Engineer's time to review subsequent submittals on the unacceptable item will be deducted from the Contract amount.
9. Review, acceptance, or approval of schedules, shop drawings, lists of materials, and procedures submitted or requested by the Contractor shall not add to the Contract amount, and all additional costs which may result therefrom shall be solely the obligation of the Contractor.

10. Shop Drawing submittals processed by the Engineer do not become Contract Documents and are not Change Orders. The purpose of the Shop Drawing review is to establish a reporting procedure and is intended for the Contractor's convenience in organizing his work and to permit the Engineer to monitor the Contractor's progress and understanding of the design.
11. It shall not be the responsibility of the Owner to provide engineering or other services to protect the Contractor from additional costs accrued from such approvals.
12. No equipment or material for which listings, drawings, or descriptive material is required shall be fabricated, purchased, or installed until the Engineer has on hand copies of such approved lists and the appropriately stamped final Shop Drawings.
13. Submittals will be acted upon by the Engineer as promptly as possible, and returned to the Contract not later than the time allowed for review in Shop Drawing Submittal Procedure. Delays caused by the need for resubmittals shall not constitute reason for an extension of Contract time.
14. The Contractor's authorization stamp shall appear on each copy of each submittal and likewise the Engineer's review stamp shall appear on each copy of each submittal.
15. For all materials and/or products falling under the jurisdiction of the American Iron and Steel requirements, a certification letter must be accompanied with the technical submittal before submittal will be reviewed and approved, refer to Sections 00 45 60B and 00 86 10A.

B. Transmittal Procedure:
    1. General - Submit through Bluebeam Revu electronically utilizing Construction/Project Management software.
    2. Submittal Numbering System - The submittal numbering system shall be coordinated with the Engineer's document control system. Each submittal shall be numbered in consecutive sequence starting with number 1, then number 2, etc. Resubmittals are to be numbered with the original submittal number and the appropriate alphabetic letter. Example: If submittal number 12 is to be resubmitted, the resubmittal will be number 12A (Consecutive Alphabetical Designation) until the submittal is "NO EXCEPTIONS TAKEN" or "EXCEPTIONS TAKEN AS NOTED".
    3. Deviation From the Contract – There shall be no deviations from the Contract.
    4. Submittal Completeness – Submittals which do not have all the information required to be submitted, including deviations, are not acceptable and will be returned without review. The practice of submitting incomplete or unchecked shop drawings for the Engineer to correct or finish will not be acceptable, and shop drawings which, in the sole opinion of the Engineer, clearly indicate that they have not been checked by the Contractor will be considered as not complying with the intent of the Contract Documents and will be returned to the Contractor without review for resubmission in the proper form. Should the Contractor submit incomplete or unchecked shop drawings on the second submittal they will be returned to the Contractor without review for resubmission in the proper form. The cost of the Engineer's time to review subsequent resubmittals will be deducted from the Contract amount.

5. Review Procedure - When the Contract Documents require a submittal, the Contractor shall submit sufficient copies such that the Engineer will retain three (3) copies of all submittal information following Shop Drawing approval. Unless otherwise specified, within thirty (30) calendar days after receipt of the submittal, the Engineer shall review the submittal. The returned submittal shall indicate one of the following actions:
    1. NO EXCEPTIONS TAKEN: If the review indicated that the material, equipment, or work method is in general conformance with the design concept and complies with the drawings and specifications, submittal copies will be marked "NO EXCEPTIONS TAKEN". In this event the Contractor may begin to implement the work method or incorporate the material or equipment covered by the submittal.
    2. EXCEPTIONS TAKEN AS NOTED: If the review indicates limited corrections are required, copies will be marked "EXCEPTIONS TAKEN AS NOTED". The Contractor may begin implementing the work method or incorporating the material and equipment covered by the submittal in accordance with the noted corrections. Where submittal information will be incorporated in O&M data, a corrected copy shall be provided.
    3. RESUBMIT WITH CORRECTIONS: If the review reveals that the submittal is insufficient or contains incorrect data, or indicates that the material, equipment or work method is not in general conformance with the design concept or in compliance with the Drawings and Specifications, copies of the submittal will be marked "RESUBMIT WITH CORRECTIONS". Submittals with deviations which have not been identified clearly may be rejected. The Contractor shall not undertake work covered by such submittals until a new submittal is submitted and returned marked either "NO EXCEPTIONS TAKEN" or "EXCEPTIONS TAKEN AS NOTED".
    4. The Engineer will not recommend payment for any work done without a submittal marked either "NO EXCEPTIONS TAKEN" or "EXCEPTIONS TAKEN AS NOTED".
6. Effect of Review of Contractor's Submittals: The review of Shop Drawings, methods of work, or information regarding materials or equipment the Contractor proposes to provide, shall not relieve the Contractor of his responsibility for errors therein and shall not be regarded as an assumption of risks or liability by the Engineer or the Owner, or by any officer or employee thereof, and the Contractor shall have no claim under the contract on account of the failure, or partial failure, of the method of work, material, or equipment so reviewed.
    1. A mark of "NO EXCEPTIONS TAKEN" or "EXCEPTIONS TAKEN AS NOTED" shall mean that the Owner has no objection to the Contractor, upon his own responsibility, using the plan or method of work proposed, or providing the materials or equipment proposed.
    2. Submittals with deviations from the contract requirements which have not been clearly identified by the Contractor at the time the submittal is transmitted to the Engineer for review may be rejected by the Owner and/or Engineer at a later date, even though the submittal may have been marked "NO EXCEPTIONS TAKEN" or "EXCEPTIONS TAKEN AS NOTED".

C. Record Documents

1. Record documents shall be prepared and maintained in accordance with Section 01 78 10 - Project Record Documents.
2. Upon satisfactory completion of the Contract, submit record documents to the Engineer. Accompany submittal with transmittal containing submittal date, Contract title and number, the Contractor's name and address, title and number of each record document, certification that each document as submitted is complete and accurate, and the Contractor's signature.
3. The contract closeout and final payment under this contract **will not** be finalized and approved until a complete and accurate set of record documents, as described in Section 01 78 10 - Project Record Documents, have been submitted to the Engineer, reviewed for accuracy and accepted.

D. Operation and Maintenance Manual (O&M)
1. O & M Manuals shall be prepared and submitted to the Engineer in accordance with Section 01 78 23 – Operation and Maintenance Manuals.
2. The contract closeout and final payment under this contract **will not** be finalized and approved until O & M Manuals have been submitted to the Engineer, reviewed for accuracy and accepted.

E. Shop Drawings
1. The Shop Drawing submittal shall be made after the award of contract and before fabrication.
2. Shop Drawings may be detailed on 8-1/2 by 11-inch and/or 11 by 17-inch sheets.

F. Professional Seals
1. Provide seal on drawings of structural components and assemblies that are submitted for review and where required by the Specifications.
2. Each copy of a submittal requiring a Professional Seal shall bear an original seal. Reproductions of Professional Seals will not be accepted.

G. Samples and Test Specimens
1. Where required in the Specifications, and as determined necessary by the Engineer, test specimens or samples of materials, appliances, and fittings to be used or offered for use in connection with the Work shall be submitted to the Engineer at the Contractor's expense, with information as to their sources, with all cartage charges prepaid, and in such quantities and sizes as may be required for proper examination and tests to establish the quality or equality thereof, as applicable.
2. All samples and test specimens shall be submitted in ample time to enable the Engineer to make any tests or examinations necessary, without delay to the Work. The Contractor will be held responsible for any loss of time due to his neglect or failure to deliver the required samples to the Engineer, as specified.
3. The Contractor shall submit additional samples as required by the Engineer to ensure equality with the original approved sample and/or for determination of Specification compliance.
4. Laboratory tests and examinations that are not required by the Specifications and that the Owner elects to make will be made at no cost to the Contractor, except that, if a sample of any material or equipment proposed for use by the

Contractor fails to meet the Specifications, the cost of testing subsequent samples shall be borne by the Contractor.

5. Submit, in duplicate, to the Engineer test results that are certified by laboratory as specified in Section 01 45 00 - Quality Requirements. The samples furnished and the cost for the laboratory services shall be at the expense of the Contractor and included in the prices bid for the associated work.

H. Certificates of Compliance:

1. Furnish a Certificate of Compliance for materials specified to a recognized standard or code prior to the use of any such materials in the work. The Engineer may permit the use of certain materials or assemblies prior to sampling and testing if accompanied by a Certificate of Compliance. The certificate shall be signed by the manufacturer of the material or the manufacturer of assembled materials and shall state that the materials involved comply in all respects with the requirements of the Specifications. A Certificate of Compliance shall be furnished with each lot of material delivered to the work and the lot so certified shall be clearly identified in the certificate.
2. All materials used on the basis of a Certificate of Compliance may be sampled and tested at any time. The fact that material is used on the basis of a Certificate of Compliance shall not relieve the Contractor of responsibility for incorporating material in the Work which conforms to the requirements of the Contract Documents and any such material not conforming to such requirements will be subject to rejection whether in place or not.
3. The Engineer reserves the right to refuse permission for use of material on the basis of a Certificate of Compliance.
4. The form of the Certificate of Compliance and its disposition shall be as directed by the Engineer.
5. Provide a letter certification for compliance with the American Iron and Steel requirements for those products and/or materials under its jurisdiction.

PART 2 PRODUCTS – NOT USED.

PART 3 EXECUTION – NOT USED.

END OF SECTION 01 33 00

PART 1 GENERAL

1.01 CONTRACTOR'S RESPONSIBILITY FOR SAFETY

A. The Contractor shall do whatever work is necessary for safety and be solely and completely responsible for conditions of the jobsite, including safety of all persons (including employees) and property during the Contract period. This requirement shall apply continuously and not be limited to normal working hours.

1.02 FEDERAL, STATE, AND LOCAL SAFETY REQUIREMENTS

A. Safety provisions shall conform to the Federal and State Departments of Labor Occupational Safety and Health Act (OSHA), and all other applicable federal, state, county, and local laws, ordinances, codes, the requirements set forth herein, and any regulations that may be specified in other parts of these Contract Documents. Where any of these are in conflict, the more stringent requirement shall be followed. The Contractor's failure to thoroughly familiarize himself with the aforementioned safety provisions shall not relieve him from compliance with the obligations and penalties set forth therein.

1.03 SAFE ACCESS BY FEDERAL, STATE, AND LOCAL GOVERNMENT OFFICIALS

A. The Contractor shall at all times provide proper facilities for safe access to the work by authorized government officials.

1.04 CONSTRUCTION SAFETY PROGRAM

A. The Contractor shall develop and maintain for the duration of this Contract, a safety program that will effectively incorporate and implement all required safety provisions. The Contractor shall appoint an employee who is qualified and authorized to supervise and enforce compliance with the safety program.

B. The duty of the Engineer to conduct construction review of the Contractor's performance is not intended to include a review or approval of the adequacy of the Contractor's safety supervisor, the safety program, or any safety measures taken in, on, or near the construction site.

1.05 SAFETY EQUIPMENT

A. The Contractor, as part of his safety program, shall maintain at his office or other well-known place at the jobsite, safety equipment applicable to the work as prescribed by the governing safety authorities, all articles necessary for giving first-aid to the injured, and shall establish the procedure for the immediate removal to a hospital or a doctor's care of any person who may be injured on the jobsite.

B. The performance of all work and all completed construction, particularly with respect to ladders, platforms, structure openings, scaffolding, shoring, lagging, machinery guards and the like, shall be in accordance with the applicable governing safety authorities.

1.06 INCIDENT REPORTS

A. If death or serious injuries or serious damages are caused, the incident shall be reported immediately by telephone or messenger to the Engineer. In addition, the Contractor must promptly report in writing to the Engineer all incidents whatsoever arising out of, or in connection with, the performance of the work whether on, or adjacent to, the site, giving full details and statements of witnesses.

B. If a claim is made by anyone against the Contractor or any subcontractor on account of any incident, the Contractor shall promptly report the facts in writing to the Engineer, giving full details of the claim.

1.07 TRAFFIC SAFETY AND ACCESS TO PROPERTY

A. Comply with all rules and regulations of the city, state, and county authorities regarding closing or restricting the use of public streets or highways. No public or private road shall be closed, except by express permission of the Owner. Conduct the work so as to assure the least possible obstruction to traffic and normal commercial pursuits. Protect all obstructions within traveled roadways by installing approved signs, barricades, and lights where necessary for the safety of the public. The convenience of the general public and residents adjacent to the project, and the protection of persons and property are of prime importance and shall be provided for in an adequate and satisfactory manner. The Contractor shall clean public roads in the project vicinity as required by the city, state and county authorities, and Owner.

1.08 FIRE PREVENTION AND PROTECTION

A. The Contractor shall perform all work in a fire-safe manner. He shall supply and maintain on the site adequate fire-fighting equipment capable of extinguishing incipient fires. The Contractor shall comply with applicable federal, local, and state fire-prevention regulations. Where these regulations do not apply, applicable parts of the National Fire Prevention Standard for Safeguarding Building Construction Operations (NFPA No. 241) shall be followed.

1.09 USE OF EXPLOSIVES

A. Explosives shall not be used on this project.

1.10 CONTRACTOR TO SAFEGUARD EXISTING UTILITIES

A. The Contractor shall perform all work, in such a manner as to avoid damage to existing fire hydrants, power poles, lighting standards, and all other existing utilities, public or private. See Section 01 01 10 - SITE CONDITIONS, Division 1.

1.11 PROTECTION OF TREES

A. Protect from damage all trees outside the limits of the work and trees within the limits of the work which are designated on the Drawings to remain undisturbed.

1.12 TREE REMOVAL

A. No trees shall be removed without the express approval of the Engineer. Removed trees shall be disposed of in a legal manner off the worksite by the Contractor.

1.13 SURVEY TO ESTABLISH AUTHENTICITY OF POSSIBLE DAMAGE CLAIMS

A. After the Contract is awarded and before the commencement of work, the Contractor shall make a thorough examination of all existing right-of-way, easements, buildings, structures, landscaping, pavement, patios and other improvements in the vicinity of the work, as applicable, which might be damaged by their operations.

B. Records in triplicate of all observations shall be prepared by the Contractor and every copy of every document shall be signed by the authorized representative of the Contractor. Photographs shall be made by the Contractor and signed in the manner specified above. One signed copy of every document and photograph will be kept on file in the office of the Engineer. Photos and videos shall have the date of capture embedded in the file and visible when viewing. For video files, Contractor shall include a signed log of videos identifying the location, direction of viewing and landmarks for reference.

C. The above records and photographs are intended for use as indisputable evidence in ascertaining the extent of any damage which may occur as a result of the Contractor's operations and are for the protection of the adjacent property owners, the Contractor, and the Owner, and will be a means of determining whether and to what extent damage, resulting from the Contractor's operations, occurred during the Contract work.

D. Contractor shall not be allowed to start work until submission of the records described in this section are submitted to the Owner and Engineer.

1.14 PROTECTION OF PRIVATE PROPERTY

A. When working on private property and in easements, Contractor shall take the necessary steps to protect that property from damage as a result of the work. This may include, but is not limited to, laying down plates, plywood or other barriers to protect driveways, patios, lawn, landscaping, buildings and other features from damage as a result of Contractor’s work.

B. Contractor shall notify property owners in advance of needing to access private property. Owner and Engineer shall be copied on any correspondence and made aware of any communication with the property owner.

C. Contractor shall restore any damage to private property to a condition equal or better than it existed prior to the start of work on the property. Documentation as

obtained and provided in Section 1.13 of this specification shall be referenced in discussions regarding private property damage.

PART 2 PRODUCTS (NOT APPLICABLE)

PART 3 EXECUTION (NOT APPLICABLE)

END OF SECTION 01 35 26

PART 1 GENERAL

1.01 SUMMARY

A. This section lists many of the construction industry organizations, professional and technical associations, societies and institutes, and government agencies issuing, promoting, or enforcing standards to which references may be made in the Procurement Document, along with the abbreviations commonly used for those references. Also included are certain general requirements for the use of industry standards specified, and for application of the standards in quality control.

B. This section lists many of the construction industry technical abbreviations to which may be made in the Procurement Documents.

1.02 USE OF REFERENCE STANDARDS

A. Goods and Special Services specified by reference to the published standard or specification of a government agency, technical association, trade association, professional society or institute, testing agency, or other organization shall conform to or surpass the minimum standards of quality for materials and workmanship established by the designated standard or specification.

B. Where so specified, products or workmanship shall also conform to the additional prescriptive or performance requirements included within the Procurement Document to establish a higher or more stringent standard of quality than that required by the referenced standard.

C. Where the specific date or issue of the standard is not included with the reference to the standard, the edition, including all amendments published and available on the first published date of the Invitation to Bid shall apply.

D. Where two or more standards are specified to establish quality, the product and workmanship shall conform to or surpass the requirements of both.

E. In case of conflict between referenced standards, the more stringent shall apply.

F. Where both a standard and a brand name are specified for a product in the Procurement Document, the proprietary product named shall conform to or surpass the requirements of the specified reference standard. The listing of a trade name in a Procurement Document shall not be construed as warranting that such product conforms to the respective reference standard.

G. Copies of standards:

1. Copies of applicable referenced standards have not been bound in this Procurement Document.
2. Where copies of standards are needed by the Contractor for superintendence and quality control of the work, obtain a copy or copies directly from the publication source.

3. Submittals: Submit for review the requests to use products conforming to printed standards or publications with a different publication date from that effective under the Procurement Agreement. Clearly indicate the changes in product or workmanship quality involved in the proposed change, if any, and reasons for the request.

1.03 ABBREVIATIONS

A. Abbreviations for Trade Organizations and Government Agencies: The following is a list of construction industry organizations and government agencies to which references may be made in the Procurement Document, with abbreviations used.

AA	Aluminum Association
AAMA	American Architectural Manufacturers Association
AAMA	Architectural Aluminum Manufacturers' Association
AASHTO	American Association of State Highway and Transportation Officials
ACI	American Concrete Institute
AFBMA	Anti-Friction Bearing Manufacturers' Association
AGA	American Gas Association
AGMA	American Gear Manufacturers' Association
AISC	American Institute of Steel Construction
AISI	American Iron and Steel Institute
AITC	American Institute of Timber Construction
ALS	American Lumber Standards
AMCA	Air Moving and Conditioning Association
ANSI	American National Standards Institute
APA	American Plywood Association
API	American Petroleum Institute
AREA	American Railway Engineering Association
ARI	Air Conditioning and Refrigeration Institute
ASAE	American Society of Agricultural Engineers
ASCE	American Society of Civil Engineers
ASHRAE	American Society of Heating, Refrigerating and Air-Conditioning Engineers, Inc.
ASME	American Society of Mechanical Engineers
ASTM	American Society for Testing and Materials
AWI	Architectural Woodwork Institute
AWPA	American Wood Preservers' Association
AWPB	American Wood Preservers' Bureau
AWPI	American Wood Preservers' Institute
AWS	American Welding Society
AWWA	American Water Works Association
BHMA	Builders Hardware Manufacturers' Association

- CONTINUED -

LIST OF 1.03A ABBREVIATIONS CONT'D.

CBMA	Certified Ballast Manufacturers' Association
CDA	Copper Development Association
CGA	Compressed Gas Association
CISPI	Cast Iron Soil Pipe Institute
CMAA	Crane Manufacturers' Association of America
CRSI	Concrete Reinforcing Steel Institute
FGMA	Flat Glass Marketing Association
FM	Factory Mutual
Fed. Spec.	Federal Specifications
FS	Federal Specification
GA	Gypsum Association
HI	Hydraulic Institute
HMI	Hoist Manufacturers' Institute
ICBO	International Conference of Building Officials
ICEA	Insulated Cable Engineers' Association
IDNR	Iowa Department of Natural Resources
IEEE	Institute of Electrical and Electronics Engineers, Inc.
IES	Illuminating Engineering Society
ISA	Instrument Society of America
JIC	Joint Industry Conferences of Hydraulic Manufacturers
MIA	Marble Institute of America
Mil. Sp.	Military Specification
MS	Military Specifications
MMA	Monorail Manufacturers' Association
NAAMM	National Association of Architectural Metal Manufacturers
NACE	National Association of Corrosion Engineers
NBHA	National Builders' Hardware Association
NEC	National Electrical Code
NEMA	National Electrical Manufacturers' Association
NESC	National Electric Safety Code
NFPA	National Fire Protection Association
NHLA	National Hardwood Lumber Association
NLMA	National Lumber Manufacturers' Association
NTMA	National Terrazzo and Mosaic Association
NWMA	National Woodwork Manufacturers' Association
OECI	Overhead Electrical Crane Institute
OSHA	Occupational Safety and Health Administration (both Federal and State)
PEI	Porcelain Enamel Institute
PS	Product Standards Section - U.S. Department of Commerce
RLM	RLM Standards Institute, Inc.

- CONTINUED -

LIST OF 1.03A ABBREVIATIONS CONT'D.

RMA	Rubber Manufacturers' Association
SAE	Society of Automotive Engineers
SDI	Steel Deck Institute
SIGMA	Sealed Insulating Glass Manufacturing Association
SJI	Steel Joist Institute
SMACNA	Sheet Metal and Air Conditioning Contractors National Association
SSPC	Steel Structures Painting Council
SWI	Steel Window Institute
TEMA	Tubular Exchanger Manufacturers' Association
TCA	Tile Council of America
UBC	Uniform Building Code
UL	Underwriters' Laboratories, Inc.
WCLIB	West Coast Lumber Inspection Bureau
WWPA	Western Wood Products Association

B. Construction Industry Technical Abbreviations: The following is a list of construction industry technical abbreviations to which may be made in the Procurement Documents.

Aband.	Abandon	Dia.	Diameter
Add'l.	Additional	D.I.P.	Ductile Iron Pipe
Alum	Aluminum	Div.	Diversion
Anc.	Anchor	Dr.	Doors
AWG	American Wire Gauge	Dwg's.	Drawings
Approx.	Approximate	Dwls.	Dowels
Avg.	Average	Ea.	Each
Bott.	Bottom	E	East
B.F.	Both Faces	E.F.	Each Face
B.L.	Baseline	El.	Elevation
BFV	Butterfly Valve	Elev.	Elevation
Bldg.	Building	Elec.	Electric
Bit.	Bituminous Concrete	Ellip.	Elliptical
Blk.	Block	Engr.	Engineer
B.M.	Benchmark	E.W.	Each Way
B.O.V.	Bottom of Vessel	Exist.	Existing
CFS	Cubic Feet Per Second	Exp.	Expansion
Cl.	Class	F.F.	First Flush
C.I.	Cast Iron	F.H.	Fire Hydrant
C	Centerline	F.D.	Floor Drain
Cl	Clearance	Fin.	Finished
CL2	Chlorine	Flg.	Flange
CMP	Corrugated Metal Pipe	Fl.	Flange
Cly	Cylinder	F.M.	Force Main
Conc.	Concrete	FRP	Fiberglass Reinforced Plastic
Const. Jts.	Construction Joints	Ft.	Feet

- CONTINUED -

LIST OF 1.03B ABBREVIATIONS CONTD.

Ctr.	Center	Ftg.	Footing
C.W.	City Water	Ga.	Gauge
CPVC	Chlorinated Polyvinyl Chloride	Gr.	Grade
		Galv.	Galvanized
Cont.	Continuous	GPM	Gallons Per Minute
Contr.	Contractor	GRS	Galvanized Rigid Steel (Conduit)
C.O.	Clean Out		
Cor.	Corner	G.V.	Gate Valve
Cse.	Course	HB	Hose Bibb
Cts.	Centers	HDPE	High Density Polyethylene
C.V.	Check Valve		
C.Y.	Cubic Yard	Hks.	Hooks
Defl.	Deflection	Horiz.	Horizontal
Det'ls.	Details	Ht.	Height
H.H.	Handhole	P.S.	Pumping Station
H.P.	Horse Power	psi	Pounds Per Square Inch
H.C.L.	Hydrogen Chloride	PVC	Polyvinyl Chloride
H.W.L.	High Water Level	Qty.	Quantity
HVAC	Heating Ventilating & Air Conditioning	R. or Rad.	Radius
		R.R.	Railroad
HW	Hot Water	R.C.P.	Reinforced Concrete Pipe
I.D.	Inside Diameter	Req'd	Required
In.	Inch	R.O.W.	Right-of-Way
Inv.	Invert Elevation	Rt.	Right
I.E.	Invert Elevation	S.	South
Jct.	Junction	San.	Sanitary
Jt.	Joint	Sch.	Schedule
Loc.	Location	Sht.	Sheet
Lt.	Left	Specs.	Specifications
L.W.L.	Low Water Level	Sq.	Square
Lin. Ft.	Lineal Feet	S.S.	Stainless Steel
LF	Lok-Fast	Std.	Standard
LFPE	Lok-Fast Plain End	Sta.	Station
LRB	Lok-Ring Bell	Stl.	Steel
LRPE	Lok-Ring Plain	Str.	Structure
M	Motor	Surf.	Surface
Mat'l.	Material	S.W.D.	Sidewater Depth
Max.	Maximum	T	Top
MCM	Thousand Circular Mils	T & B	Top and Bottom
Meas.	Measurement	T. or Tel.	Telephone
Mfg's	Manufacturer's	Thd.	Thread
MGD	Million Gallons Per Day	Thrshld.	Threshold
M.H.	Manhole	T.P.	Telephone Pole
Min.	Minimum	T.G.S	Top of Grate
M.J.	Mechanical Joint	T.O.C.	Top of Concrete
M.O.	Masonry Opening	Ty.	Type

- CONTINUED -

LIST OF 1.03B ABBREVIATIONS CONTD.

N/A	Not Applicable	Typ.	Typical
N.	North	Vert.	Vertical
No.	Number	W.	West
Nom.	Nominal	w/	With
N.T.S.	Not To Scale	W.I.	Wrought Iron
Opng.	Opening	W.H.	Water Heater
O.D.	Outside Diameter	Wt.	Weight
P.E.	Plain End	WF	Wide Flange
Perf.	Perforated	W.L.	Water Level
Pl.	Plate	W.M.	Water Main
P.L.	Property Line	WOG	Water, Oil or Gas
P.P.	Power Pole	W/S or W.S.	Water Stop
Prop.	Proposed	W.W.F.	Woven Wire Fabric

PART 2 PRODUCTS – NOT USED

PART 3 EXECUTION – NOT USED

END OF SECTION 01 42 20

PART 1 GENERAL

1.01 SUMMARY

A. Section Includes: Requirements for Manufacturer's Services during construction and start-up.

B. Related Sections:
   1. Section 01 91 00 – Commissioning

1.02 SUBMITTALS

A. Submit written authorization from each manufacturer for each manufacturer's authorized representative to include:
   1. Name of manufacturer represented.
   2. Name of authorized representative.
   3. Name of equipment or system for service.
   4. Specification section name and number of equipment or system for service.
   5. Authorization of named representative by manufacturer.

B. Submit a written report prepared by the manufacturer's authorized representative of each manufacturer for each trip to the site that includes:
   1. Detailed description of Representative's findings.
   2. Installation certification.
   3. Detailed record of all inspections.
   4. Outline in detail of any and all deficiencies noted.

1.03 MANUFACTURER'S AUTHORIZED REPRESENTATIVE

A. Provide competent and experienced technical, process and construction representatives to represent the manufacturers of the equipment and systems with manufacturer's written authorization as manufacturer's authorized representative.

1.04 SERVICES DURING CONSTRUCTION

A. Manufacturer's authorized representative shall be present on site for as many days as may be necessary to resolve assembly, installation and start-up problems at the worksite which are attributable to, or associated with, the equipment furnished, whether or not specifically set forth in the Technical Specifications.

1.05 STARTUP SERVICES

A. Where Startup services are called for in the Technical Specifications, or when technical assistance is necessary due to any malfunction of the equipment or system furnished, the manufacturers authorized representative shall provide such services. They shall also conduct and/or assist with final performance and demonstration testing, as required by Section 01 91 00 – Commissioning, and

elsewhere in the Specifications. These services shall continue until such times as the applicable equipment or system has been successfully tested for performance and has been accepted by the Owner for full-time operation.

1.06 MANUFACTURER'S SERVICE FOR EQUIPMENT

A. Provide all manufacturer's service recommended by each manufacturer for all equipment furnished under this contract, whether or not specifically set forth in the Technical Specifications.

B. Submit, to the Engineer, a written report covering the technician's findings and installation certification by each manufacturer for each trip covering all inspections and outlining in details any deficiencies noted. The Engineer will forward a copy of each report to the Contractor indicating which items are to be acted upon by the Contractor.

C. Provide goods and equipment checkout, calibration, field testing assistance and installation certification for, but not to be limited to, the following portions on the Work:

1. Valves
2. Instrumentation & Controls
3. Electrical Equipment

PART 2 PRODUCTS – NOT USED

PART 3 EXECUTION – NOT USED

END OF SECTION 01 43 50

PART 1 GENERAL

1.01 SUMMARY

A. The Contractor will employ and pay for an independent testing firm to perform specified quality assurance/quality control tests and services.

B. This Section includes administrative and procedural requirements for quality assurance and quality control.

C. Testing and inspecting services are required to verify compliance with requirements specified or indicated. These services do not relieve Contractor of responsibility for compliance with the Contract Document requirements.

1. Specific quality-assurance and quality–control requirements for individual construction activities are specified in the Sections that specify those activities. Requirements in those Sections may also cover production of standard products.
2. Specified tests, inspections, and related actions do not limit Contractor's other quality-assurance and quality–control procedures that facilitate compliance with the Contract Document requirements.
3. Requirements for Contractor to provide quality-assurance and quality–control services required by Engineer or Owner, or authorities having jurisdiction are not limited by provisions of this Section.

1.02 DEFINITIONS

A. Quality-Assurance Services: Activities, actions, and procedures performed before and during execution of the Work to guard against defects and deficiencies and substantiate that proposed construction will comply with requirements.

B. Quality-Control Services: Tests, inspections, procedures, and related actions during and after execution of the Work to evaluate that actual products incorporated into the Work and completed construction comply with requirements. Services do not include contract enforcement activities performed by Engineer.

C. Mockups: Full-size, physical assemblies that are constructed on-site. Mockups are used to verify selections made under sample submittals, to demonstrate aesthetic effects and, where indicated, qualities of materials and execution, and to review construction, coordination, testing, or operation; they are not Samples.

D. Laboratory Mockups: Full-size, physical assemblies that are constructed at testing facility to verify performance characteristics.

E. Preconstruction Testing: Tests and inspections that are performed specifically for the Project before products and materials are incorporated into the Work to verify performance or compliance with specified criteria.

F. Product Testing: Tests and inspections that are performed by an NRTL, and NVLAP, or a testing agency qualified to conduct product testing and acceptable to authorities having jurisdiction, to establish product performance and compliance with industry standards.

G. Source Quality-Control Testing: Tests and inspections that are performed at the source, i.e., plant, mill, factory, or shop.

H. Field Quality-Control Testing: Tests and inspections that are performed on-site for installation of the Work and for completed Work.

I. Testing Agency: An entity engaged to perform specific tests, inspections, or both. Testing laboratory or testing firm shall mean the same as testing agency.

J. Installer/Applicator/Erector: Contractor or another entity engaged by Contractor as an employee, Subcontractor, or Sub-subcontractor, to perform a particular construction operation, including installation, erection, application, and similar operations.

1. Using a term such as “carpentry” does not imply that certain construction activities must be performed by accredited or unionized individuals of a corresponding generic name, such as “carpenter.” It also does not imply that requirements specified apply exclusively to tradespeople of the corresponding generic name.

K. Experienced: When used with an entity, “experienced” means having successfully completed a minimum of five previous projects similar in size and scope to this Project; being familiar with special requirements indicated; and having complied with requirements of authorities having jurisdiction.

1.03 CONFLICTING REQUIREMENTS

A. General: If compliance with two or more standards is specified and the standards establish different or conflicting requirements for minimum quantities or quality levels, comply with the most stringent requirement. Refer uncertainties and requirements that are different, but apparently equal, to Engineer for a decision before proceeding.

B. Minimum Quantity or Quality Levels: The quantity or quality level shown or specified shall be the minimum provided or performed. The actual installation may comply exactly with the minimum quantity or quality specified, or it may exceed the minimum within reasonable limits. To comply with these requirements, indicated numeric values are minimum or maximum, as appropriate, for the context of requirements. Refer uncertainties to Engineer for a decision before proceeding.

C. Reports: Prepare and submit certified written reports that include the following:

1. Date of issue.
2. Project title and number.
3. Name, address, and telephone number of testing agency.
4. Dates and locations of samples and tests or inspections.
5. Names of individuals making tests and inspections.

6. Description of the Work and test and inspection method.
7. Identification of product and Specification Section.
8. Complete test or inspection data.
9. Test and inspection results and an interpretation of test results.
10. Record of temperature and weather conditions at time of sample taking and testing and inspecting.
11. Comments or professional opinion on whether tested or inspected Work complies with the Contract Document requirements.
12. Name and signature of laboratory inspector.
13. Recommendations on retesting and reinspecting.

D. Permits, Licenses, and Certificates: For Owner's records, submit copies of permits, licenses, certifications, inspection reports, releases, jurisdictional settlements, notice, receipts for fee payments, judgments, correspondence, records, and similar documents, established for compliance with standards and regulations bearing on performance of the Work.

1.04 LIMITS OF AUTHORITY OF TESTING SERVICE

A. Laboratory is not authorized to:
1. Release, revoke, alter or enlarge on, Contract requirements.
2. Approve or accept any portion of work.
3. Perform any duties of the Contractor.

1.05 CONTRACTOR'S RESPONSIBILITIES

A. Cooperate with Laboratory personnel, provide access to work, to manufacturer's operations.

B. Furnish copies of mill test reports.

C. Furnish verification of compliance with Contract requirements for all materials and equipment.

D. Furnish casual labor and facilities:
1. To provide access to work to be tested.
2. To facilitate inspections and tests.
3. For laboratory's exclusive use for storage and curing of test samples.

E. Notify laboratory sufficiently in advance of operations to allow for its assignment of personnel and scheduling of tests.

F. Correct work which is defective or which fails to conform to Contract Documents in accordance with General Conditions. Corrective work shall not delay project schedule or work of other contractors.

G. Patch all surfaces and areas disturbed by testing operations.

1.06 ADDITIONAL TESTING BY OWNER

A. Owner may also at his option, obtain additional inspections and tests in accordance with General Conditions.

1.07 REINSPECTION

A. In the event that accuracy or adequacy of any inspection or test is challenged by any parties, and reinspection, or retesting is required, all costs for reinspection or retesting shall be paid by party challenging the original report unless the reinspection or retesting results in taking actions differing from that based on the original report which in that case, the party paying for the original tests shall pay for the additional inspection and tests.

B. Such inspections or tests will be considered only when performed by a Testing Laboratory or Consultant approved by Owner in writing.

1.08 ANNIVERSARY INSPECTION

A. A first anniversary inspection shall be conducted by the owner, contractor, and manufacturers. The anniversary inspection shall occur 30 days before warranty period ends.

B. The anniversary inspection shall cover the entire water tower structure, including but not limited to:
   1. Foundation and support structure
   2. Tank interior and exterior
   3. Piping and connections
   4. Coatings and corrosion
   5. Operational performance

C. A detailed report shall be prepared post-inspection and submitted to the Owner.

1.09 SCHEDULE OF TESTS

A. Tests and inspections are listed in the specification section for the products or work requiring the test or inspection.

PART 2 PRODUCTS – NOT USED

PART 3 EXECUTION

3.01 REPAIR AND PROTECTION

A. General: On completion of testing, inspecting, sample taking, and similar services, repair damaged construction and restore substrates and finishes.

1. Provide materials and comply with installation requirements specified in other Specification Sections. Restore patched areas and extend restoration into adjoining areas with durable seams that are as invisible as possible.
2. Comply with the requirements for Section 03 05 00 – Common Work Results for Concrete.

B. Protect construction exposed by or for quality-control service activities.

C. Repair and protection are Contractor's responsibility, regardless of the assignment of responsibility for quality-control services.

END OF SECTION 01 45 00

PART 1 GENERAL

1.01 SUMMARY

A. The Contractor shall provide controls over environmental conditions at the construction site and related areas under the Contractor's control.

B. The Contractor shall remove physical evidence of temporary controls at completion of work or as directed.

C. Requirements for provision and maintenance of temporary utilities during construction period to include:

1. Portable toilets.
2. Payment of all utility, field office telephone, and fuel bills, service charges, and installation charges.
3. Drinking water for Contractor's forces.
4. Non-potable water required for Contractor's work.
5. Work area lighting as required.
6. Safety lighting for barriers and other safety obstacles for work activities under the responsibility or control of Contractor.
7. Electrical costs for all construction tools and equipment.

D. Provide and maintain suitable barriers to prevent unauthorized entry into open excavations, and to protect the work, existing facilities and utilities, trees and plants from construction operations.

1. Remove when no longer needed, at completion of the work or as directed

E. Provide and maintain vehicular access to site and within site.

1.02 RELATED SECTIONS/REQUIREMENTS

A. Division 31 – Earthwork.

1.03 DESCRIPTION

A. General Construction

1. Structurally sound foundation and superstructure.
2. Weathertight, with raised floors; compatible with occupancy and storage requirements.
3. Temperature transmission resistance: Compatible with occupancy and storage requirements.
4. Exterior finish surfaces: Weather resistant, in neat condition.
5. Interior finishes of offices:

a. Walls, ceilings: Sheet-type materials, prefinished or painted.
b. Floors: Resilient floor covering.

6. At Contractor's option, portable buildings or mobile homes may be used for offices.
   a. Mobile homes, when used, shall be modified to convert spaces for office use.
   b. Do not use field offices for living quarters.

B. Contractor's office and facilities
   1. Size: Contractor's option. Suitable for specified use.
   2. Light and temperature sufficient for Contractor's use.
   3. Telephone: As required by contractor.
   4. Furnishings in meeting area.
      a. Conference table and chairs for at least six persons.
      b. Racks and files for project record documents in, or adjacent to, meeting area.
      c. Other furnishings: Contractor's option.
      d. Equipment and supplies
         i. First aid equipment.
         ii. One 10-inch outdoor-type mercury thermometer.
         iii. For visitor's use: Six adjustable-band protective helmets.
   5. Fire extinguishers
      a. One standard dry chemical (ABC) type for each office.

C. Identification
   1. Provide a 36 in. x 24 in. sign on each office structure to identify occupants and function.
   2. "Emergency First Aid" sign.
   3. Signs for Notices in accord with Federal and State rules and regulations.

1.04 TEMPORARY ENVIRONMENTAL CONTROLS

A. Noise Control.
   1. All engines and engine driven equipment used for hauling or construction shall be equipped with an adequate muffler in constant operation and properly maintained to prevent excessive or unusual noise.

B. Dust Control.
   1. Provide dust control materials to minimize dust from construction operations. Prevent air-borne dust from dispersing into the atmosphere.

C. Water Control.
   1. Provide methods to control surface water to prevent damage to the project, the site or adjoining properties.
   2. Provide, operate and maintain hydraulic equipment of adequate capacity to control surface water.
   3. Dispose of drainage water in a manner to prevent flooding, erosion, silting or runoff of silt or sediment or other damage to all portions of the site or to adjoining areas.

4. Provide methods to control surface and rainwater runoff so that water is not allowed into open excavations.

D. Debris Control.

1. Maintain all areas under Contractor's control free of extraneous debris.
2. Initiate and maintain a specific program to prevent accumulation of debris at construction site, storage and parking areas or along access roads and haul routes.
   a. Provide containers for deposit of debris as specified in 01 70 00 - Cleaning.
   b. Prohibit overloading of trucks to prevent spillages on access and haul routes and provide daily inspection of traffic areas to enforce requirements.
3. Schedule collection and disposal of debris as specified in 01 70 00 - Cleaning.
   i. Provide additional collections and disposals of debris whenever regular schedule is inadequate to prevent accumulation.

E. Pollution Control.

1. Provide methods, means and facilities required to prevent contamination of soil, water or atmosphere by the discharge of noxious substances from construction operations.
2. Provide equipment and personnel, perform emergency measures required to contain all spillages, and to remove contaminated soils or liquids.
3. Take special measures to prevent harmful substances from entering public waters.
   a. Prevent disposal of wastes, effluents, chemicals or other such substances adjacent to streams, drainage ditches, or in sanitary or storm sewers.
4. Provide systems for control of atmospheric pollutants.
   a. Prevent toxic concentrations of chemicals.
   b. Prevent harmful dispersal of pollutants into the atmosphere.

F. Erosion Control.

1. Obtain and pay for stormwater permits as required by the Missouri Department of Natural Resources.
2. Plan and execute construction and earthwork in a manner to control surface drainage from cuts and fills, and from soil staging areas, to prevent erosion and sedimentation.
3. The design and implementation of erosion control measures and construction activities in accordance with MDNR Protecting Water Quality Field Guide, Chapter 5: Inspection for Erosion, Sediment and Stormwater Control (2011).

i. Minimize the areas of bare soil exposed at one time.
ii. Provide temporary control measures such as berms, dikes and drains.
iii. Provide temporary control measures to prevent silting or runoff of silt or sediment from site.

4. Construct fills and waste areas by selective placement to eliminate surface silts or clays which will erode.
5. Periodically inspect earthwork to detect evidence of the start of erosion. Apply corrective measures to control erosion.

1.05 TEMPORARY UTILITIES

A. Description of Utility Systems.
1. Electrical service as required for Contractor's field office.
2. The Contractor shall make necessary arrangements and provide all temporary electric service and lighting required during entire construction period including required fees and permits. Cost of electricity shall be borne by the Contractor. The temporary electric service shall comply with all NEC and OSHA requirements for temporary service.
3. Telephone Service – Coordinate installation with local phone company.
4. Toilets.
a. Provide temporary toilet facilities for use of all workmen and authorized parties throughout construction period.
b. Provide a minimum number of approved enclosed combination toilet and urinal units for construction personnel:
i. For less than 20 employees: 2.
ii. For 20 or more employees: 3 per 40 workers.
c. Location:
i. Obtain Owner's approval.
d. Enclosures for toilet facilities:
i. Weatherproof, sightproof, sturdy temporary enclosures.
ii. Ventilated to meet applicable Federal and State requirements.
iii. For enclosures accommodating two or more persons, provide privacy screens for each toilet fixture.

B. Costs of Installation, Operation, Maintenance and Consumables.
1. Installation, Operation and Maintenance:
a. The Contractor shall make all arrangements necessary and pay all costs associated with permits, fees, the installation, operation, maintenance, restoration and warranty extension of temporary utilities until substantial completion.

2. Consumables:
    a. The Contractor shall pay all costs of consumables for temporary utilities until substantial completion.
        i. Electrical power.
        ii. Telephone charges.
        iii. Drinking water.

C. Monitor Temporary Utilities.

1. The Contractor shall be responsible for all damage to his work or to that of other contractors caused by a defect in such utility.
    a. Enforce compliance with applicable codes and standards.
    b. Enforce safe practices.
    c. Prevent abuse of services and utilities.
    d. Prevent damage to finishes.

D. Requirements of Regulatory Agencies

1. Request and obtain Owner's prior written authorization to obtain and pay for:
    a. Permits and inspections required by governing authorities.
2. Comply with specified codes and regulations:
    a. National Electric Code (ANSI C1).
    b. National Electrical Safety Code.
    c. National Fire Protection Association Pamphlet.
    d. Federal and State requirements.
    e. Utility company regulations.

1.06 ROADS AND PARKING AREAS

A. Construct roads, drives, walks and parking facilities to provide uninterrupted access to construction offices, mobilization, work, storage areas and other areas required for execution of the Contract.

1. Location: Consult with Engineer and Owner regarding desired location.
2. Size of parking facilities: Adequate to provide for personnel needs of all contractors.

B. Provide access for emergency vehicles. Maintain driveways a minimum of 15 feet wide between and around combustible materials in storage and mobilization areas.

C. Keep fire hydrants and water control valves free from obstruction and accessible for use.

1.07 EXISTING PAVEMENTS

A. Subject to approval of the Owner, existing on-site streets and driveways may be used for construction traffic.

B. The Contractor shall restore existing roadways which are damaged during the construction activities and as a result of construction activities to their original condition, at no expense to the Owner, and to the satisfaction of the Owner. The Contractor, Engineer and Owner shall inspect the condition of the existing roadways jointly at the pre-construction meeting in order to establish their condition prior to construction activities. The same parties shall inspect and agree to the satisfactory condition of the existing roadways following construction and prior to final acceptance.

C. Use of existing parking facilities for construction personnel or for contractor's vehicles or equipment will not be permitted.

PART 2 PRODUCTS

2.01 MATERIALS

A. Materials may be new or used, but shall be adequate for purposes used, shall not create unsafe or unsanitary conditions, nor violate specified codes. Comply with Federal and State regulations.

B. Electrical Power System:

1. Provide and maintain all required facilities, including transformers, poles, conductors, raceways, breakers, fuses and switches.
2. Receptacles, fixtures:
    a. Standard products, meeting UL requirements.
    b. Provide heavy-duty guards on fixtures.
    c. Provide appropriate types of fixtures and receptacles for environment in which used, in accordance with NEC and NEMA standards.

C. Toilets:

1. Equipment: Standard products, meeting code requirements.
2. Toilet Facilities: Self ventilated portable toilets.
    a. Chemical toilets.

2.02 FENCING

A. Furnish and maintain fencing around the perimeter of all open excavations. The fencing shall be a minimum of 3 feet in height and shall be installed at the end of each workday and when the excavation is left unattended.

B. The fencing shall be held upright with reinforcing bars, steel posts or wooden stakes with the fence securely tied with wire to the bars, posts or stakes.

2.03 BARRICADES

A. Furnish and maintain barricades around work area as specified in Section 01 55 26 – Traffic Control.

PART 3 EXECUTION

3.01 ALL TEMPORARY UTILITIES

A. Comply with Federal and State regulations.

B. Install work in neat and orderly manner.

C. Make structurally, mechanically and electrically sound throughout.

D. Maintain to give safe, continuous service, and to provide safe working conditions.

E. Modify and extend systems as work progress requires.

F. Do not interfere with Owner's operations.

G. Maintain fences during entire construction period

H. Relocate fences as construction progresses.

3.02 INSTALLATION

A. Electrical:
   1. Do not run branch circuits on ground.
   2. Wire all safety devices specified for operation of equipment.
   3. Check operation of all safety devices.

B. Toilets:
   1. Erect securely, anchor to prevent dislocation.
   2. Service as often as necessary to prevent accumulation of wastes, and creation of unsanitary conditions.

C. Contractor's Field Office:
   1. Construct temporary field offices on adequate foundations, with connections for services.
      a. Raise portable buildings or mobile homes, when used.
      b. Provide steps and landings at entrance doors.
   2. Mount thermometer at convenient location, not in direct sunlight.
   3. Mount fire extinguishers in prominent locations with clear access to use.
   4. Mount sign adjacent to entrance doors of appropriate structures, in conspicuous location.

D. Temporary Roads

1. Construction methods at Contractor's option for temporary facilities which will be removed when no longer needed; adequate to provide specified results.
2. Comply with respective specification sections for preparation and construction for work which will become part of permanent construction.

3.03 MAINTENANCE

A. Each Contractor is responsible for cleaning, maintaining and keeping their trailer neat, orderly and workmanlike.

B. Maintain roads, walks and parking areas in a sound, clean condition. Repair or replace all portions damaged during construction work progress.

3.04 REMOVAL

A. Upon Owner’s prior written authorization, completely remove temporary materials and equipment.

B. Repair all damage caused by installation. Restore to original conditions. Refer to Specification Section 01 35 26 – 1.13 Survey to Establish Authenticity of Possible Damage Claims.

C. Remove temporary field offices, contents and services, at completion of construction operations, or as directed by Engineer.

D. Remove foundations, debris; grade to indicated elevations and clean area.

END OF SECTION 01 50 00

PART 1 GENERAL

1.01 RELATED DOCUMENTS

A. Drawings and general provisions of the Contract, including General and Supplementary Conditions and Division 1 Specification Sections, apply to this Section.

1.02 SUMMARY

A. Work included in this section is supply of temporary electrical power as required to complete work as indicated on drawings and specified herein.

B. All necessary distribution equipment, cables, outlets and metering equipment shall be furnished by the Contractor and meet all Utility and local Code requirements. All energy costs and applicable one-time charges billed by serving utility for Temporary Power will be paid for by the Contractor.

C. It shall remain solely the Contractor's responsibility to ensure proper system voltage and adequate electrical construction power capacity are available for his work. If construction site is at an operational facility, the Contractor's temporary construction power shall not impact Owner's operations in any manner.

D. RELATED SECTIONS

1. Section 26 05 19 - Low-Voltage Electrical Power Conductors and Cables
2. Section 26 05 26 - Grounding and Bonding for Electrical Systems
3. Section 26 05 33 – Raceway and Boxes for Electrical Systems
4. Section 26 28 16 - Enclosed Switches and Circuit Breakers

E. REFERENCE TO STANDARDS

1. NFPA 70 - National Electric Code (most current issue).
2. Requirements and standards as noted by serving utility.

PART 2 PRODUCTS

2.01 MATERIALS

A. May be new or used, but shall be adequate for purposes used, shall not create unsafe conditions, nor violate specified codes. Comply with Federal, State and local regulations.

B. Any and all additional work as required by serving electrical utility shall be considered incidental to this specification.

PART 3 EXECUTION

3.01 TEMPORARY ELECTRICITY DURING CONSTRUCTION

A. Contractor shall be solely responsible to make necessary arrangements and provide temporary electric service for construction equipment and lighting required during the entire construction period including all utility fees, service charges, and permits.

B. Electric services shall be of sufficient capacity and characteristics to supply proper current for various types of construction tools, motors, welding machines, lights, heating plant, air conditioning system, pumps and other work required. All necessary temporary wiring, panelboards, outlets, switches, lamps, fuses, controls and accessories shall be provided by Contractor. A sufficient number of electric outlets shall be provided along with adequate lighting. Materials used for temporary service shall not be used in permanent system unless specific approval is given by Owner's representative. Temporary service shall be so constructed and arranged as not to interfere with progress of other trades. This system shall be erected and maintained strictly in accordance with all ordinances and requirements for temporary service pertaining thereto inclusive of OSHA and NEC.

C. All 15A and 20A receptacles used for temporary power shall be ground fault circuit interrupter type, per NEC Article 590.

3.02 TEMPORARY POWER FOR CONTINUITY OF SERVICE TO FACILITY

A. If the work to be performed under this contract is to be performed at an existing complex, it is imperative that these facilities remain operational during the performance of work under this contract. There shall be no power outages of any duration whatsoever without the express written consent of the Owner. Failure to comply with this requirement could result in substantial penalty charges being assessed the Contractor.

B. Maximum duration of any single power outage, whether partial or complete, shall be eight (8) hours - however this maximum duration shall apply only when convenient to the owner and, again, only with the written approval of the Owner's authorized representative.

3.03 TEMPORARY POWER REMOVAL

A. Any Contractor who has installed a temporary utility connection as herein specified, shall, prior to final acceptance, remove temporary connections and installations and leave premises restored to condition in which it was found.

END OF SECTION 01 51 13

PART 1 GENERAL

1.01 SUMMARY

A. The Contractor shall provide and maintain vehicular access to site and within site.

1.02 RELATED SECTIONS

A. Specified elsewhere:

1. Section 01 01 10 - Site Conditions.
2. Section 01 58 00 – Licenses, Easements & Permits.

1.03 ROADS AND PARKING AREAS

A. Maintain access to roads, drives, walks and parking facilities in public right-of-way.

B. Maintain access to private drives. Access gate to the property shall remain closed at all times. Contact Patrick Martin (City of Grain Valley Representative) or John Overstreet (general manager Tri-county water authority) for access. Access road shall not be blocked at any time. Contractor shall build temporary access road to pump station if needed.

C. Provide access for emergency vehicles. Maintain driveways a minimum of 15 feet wide between and around combustible materials in storage and mobilization areas.

D. Keep fire hydrants and water control valves free from obstruction and accessible for use.

1.04 EXISTING PAVEMENTS

A. The Contractor shall inspect and photographically document the condition of the existing roadways in order to establish their condition prior to construction activities. The Contractor shall restore existing roadways which are damaged during the construction activities and as a result of construction activities to their original condition, at no expense to the Owner, and to the satisfaction of the Owner.

B. Use of existing parking facilities for construction personnel or for contractor's vehicles or equipment will not be permitted.

PART 2 PRODUCTS (RESERVED)

PART 3 EXECUTION

3.01 CONSTRUCTION

A. Construction methods at Contractor's option for temporary facilities which will be removed when no longer needed; adequate to provide specified results.

B. Comply with respective specification sections for preparation and construction for work which will become part of permanent construction.

3.02 MAINTENANCE

A. Maintain roads, walks and parking areas in a sound, clean condition. Repair or replace all portions damaged during construction work progress.

3.03 REMOVAL

A. Completely remove temporary materials and construction when construction needs can be met by use of permanent installation or when directed by Engineer.

B. Restore areas to original conditions at completion of work.

END OF SECTION 01 55 00

PART 1 GENERAL

1.01 SECTION INCLUDES

A. Layout, installation, maintenance and removal of traffic control devices to warn traffic of speed reductions, lane restrictions, road closures, detour traffic around the construction site and prevent traffic from entering the construction zone.

B. Layout, installation, maintenance and removal of direction and waning signs to detour pedestrians around the construction zone.

1.02 RELATED SECTIONS

A. Division 01 – General Requirements

1.03 REFERENCE TO STANDARDS

A. Conform to the Manual on Uniform Traffic Control Devices, latest edition.

1.04 REGULATORY REQUIREMENTS

A. Contractor shall be responsible to repair damage to all federal, state, city and township roadways caused by their equipment or by subcontractors or suppliers performing work under the contract. It is advisable that Contractor document the condition of all the roadways prior to starting work.

B. The traffic control and protection required to protect the work zone and public use of the street will not be paid for separately, but shall be included in the contract lump sum price for Traffic Control and Protection, and no additional compensation will be allowed.The Contractor shall provide and maintain access to public and private properties abutting the construction.

PART 2 PRODUCTS

2.01 TRAFFIC CONTROL DEVICES

A. Materials may be new or used, suitable for purpose. Comply with specified codes.

B. Where bypassing is necessary, Contractor shall utilize a route for the pump hose that is outside the paved limits of local and state right-of-way so as not to impede the flow of traffic.

2.02 LANE CLOSURES AND OFF-ROAD OPERATIONS (RESERVED)

A. Lane Closures: traffic control for the work associated with construction may require a lane closure.

B. Standards provided.

PART 3 EXECUTION

3.01 LAYOUT

A. Obtain appropriate lane closure, street closure, street use, and street repair permits from the local highway or road authority.

B. Verify and document existing conditions.

C. Evaluate placement of traffic control devices in addition to the devices shown on the plans.

D. Consider flow of traffic and maintain access to the adjacent properties.

E. Provide Owner with five (5) working days' notice of lane reductions prior to initiating traffic control.

3.02 INSTALLATION

A. Implement traffic control devices to promote flow of traffic.

B. Ensure traffic control devices are visible at night.

C. Contractor is responsible for ensuring a safe work zone for his forces and the traveling public. Should conditions arise that do not necessarily fit the standard traffic control details shown on the plans, Contractor shall make the needed adjustments to create a safe work zone at no additional cost to the Owner.

3.03 MAINTENANCE

A. Correct traffic control devices that fail or are shifted by traffic.

B. Adjust traffic control devices to respond to changes in traffic patterns and flow.

C. Replace traffic control lighting that has failed.

3.04 REMOVAL

A. Upon final completion of the project, remove all traffic control devices.

B. Remove dirt and debris from roadway open to traffic daily

END OF SECTION 01 55 26.

PART 1 GENERAL

1.01 SUMMARY

A. Contractor:

1. Provide and maintain suitable barriers to prevent unauthorized entry into work zone, open excavations, and to protect the work, existing facilities and utilities, trees and plants from construction operations.
2. Remove when no longer needed, at completion of the work or as directed.

1.02 RELATED SECTIONS

A. Specified elsewhere:

1. Section 01 11 00 – Summary of Project.
2. Section 01 55 26 – Traffic Control
2. Division 32 – Exterior Improvements.

PART 2 PRODUCTS

2.01 MATERIALS

A. Materials may be new or used, suitable for purpose. Comply with specified codes.

2.02 FENCING

A. Open mesh fence.

1. Furnish and maintain fencing around the perimeter of all open excavations. The fencing shall be a minimum of three (3) feet in height and shall be installed at the end of each workday and when the excavation is left unattended.
2. The fencing shall be held upright with reinforcing bars, steel posts or wooden stakes with the fence securely tied with wire to the bars, posts or stakes.

2.03 BARRICADES

A. Furnish and maintain barricades around work area as specified in Section 01 55 26 – Traffic Control.

PART 3 EXECUTION

3.01 INSTALLATION

A. Install in a neat and uniform manner.

B. Maintain fences during entire construction period.

C. Relocate fences as construction progresses.

3.02 REMOVAL

A. Remove when authorized by the Engineer.

B. Clean and repair damage caused by installation, fill and grade site areas to indicated elevations and slopes and clean the area.

END OF SECTION 01 56 00

PART 1 GENERAL

1.01 SUMMARY

A. Requirements include compliance with licenses, lot ownership and permits granted, obtained and/or initiated by the Owner.

1.02 RELATED SECTIONS

A. General Conditions of the Contract: Article 6.11 Permits.

B. List Document 00 80 00 Supplementary Conditions – Insurance Requirements related to specific permits, as applicable.

C. List specific sections of Divisions 1 – 48, as applicable to the project.

1.03 LICENSES

A. Licenses granted to the Owner by other governmental entities or private property owners delineate rights of the Owner to operate and maintain their utility. A copy of the license agreement(s) will be provided upon the Contractor's request.

B. Contractor shall maintain their operations within the license width(s) shown.

1.04 LOT OWNERSHIP

A. The fenced lot is owned by the City of Grain Valley and the Tri-County Water Authority.

B. Contractor shall make all efforts maintain their operations within the Grain Valley lot.

C. Tri-County Water Authority shall always have access to the pump station on the site. If the contractor plans on blocking the gravel road at any time, the contractor is required to build a temporary road in order to have full access to the pump station.

D. Contractor shall contact City of Grain Valley or Tri-County Water Authority for access to the lot.

1.05 PERMITS

A. Owner has initiated the permit process with the following regulatory and/or governmental agencies to perform the work described in this contract. Owner believes permits will be issued to the successful Contractor upon presentation of a completed permit application and the required bonds and insurance. Contractor shall complete the permit application process as described to obtain the respective permits. A copy of each permit application started, where available, are provided at in the Appendix for convenience of Contractor.

1. Local government

2. Federal Aviation Administration (FAA)
   Aeronautical Study No. 2024-ACE-6489-OE

2. Missouri Department of Natural Resources (MDNR)
   Construction Permit

C. Contractor shall conduct his operations to comply with all provisions and conditions of the permit(s).

PART 2 PRODUCTS – NOT USED

PART 3 EXECUTION – NOT USED

END OF SECTION 01 58 00

PART 1 GENERAL

1.01 SUMMARY

A. Section Includes: General product requirements that apply to all areas of the Work.

B. Related Sections:

1. Instructions to Bidders
2. Document 00 70 00 - General Conditions
3. Document 00 80 00 - Supplemental Conditions
4. Section 01 33 00 - Submittal Procedures

1.02 BASIC PRODUCT REQUIREMENTS

A. All products provided under this Contract shall be new and of suitable grade for the purpose intended.

B. All products in contact with potable water during normal operation shall be tested and certified by Underwriters Laboratory or NSF International (as an ANSI accredited certifier) against NSF 61: Drinking Water System Components – Health Effects.

C. Submit product data in accordance with Section 01 33 00 – Submittal Procedures for all products. Product data shall be sufficient to clearly demonstrate that the product, material, or equipment described conforms to the intent of the Contract Documents.

D. No products shall contain asbestos materials or lead based paint.

1.03 PRODUCT SUBSTITUTIONS – NOT USED

1.04 PREPARATION FOR SHIPMENT

A. When practical, equipment shall be factory assembled. The equipment parts and assemblies that are shipped unassembled shall be furnished with an assembly plan and instructions. Individual parts and components shall be tagged or otherwise piece-marked and keyed to the assembly plan and instructions. The separate parts and assemblies shall be match-marked or tagged in a manner to facilitate proper field assembly.

B. Generally, machined and unpainted parts subject to damage by the elements shall be protected with an application of a strippable protective coating.

C. Equipment shall be packaged or crated in a manner that will provide protection from damage during shipping, handling, and storage.

D. The outside of the package or crate shall be adequately marked or tagged to indicate its contents by name and equipment number, if applicable; approximate

weight; state any special precautions for handling; and indicate the recommended requirements for storage prior to installation.

1.05 RECEIVING

A. The Contractor shall unload and record the receipt of all equipment and materials at the jobsite. Report daily receipts to Engineer in writing.

B. Inspect and accept responsibility of all Owner supplied equipment and materials at the jobsite.

1.06 INSPECTION

A. Immediately upon receipt of equipment and materials at the jobsite, the Contractor shall inspect for completeness and any evidence of damage during shipment. Should there appear to be any damage, notify the Engineer immediately and inform the manufacturers and the transportation company of the extent of damage. If, in the opinion of Engineer and Owner, the item or items require replacing, the Contractor shall take the necessary measures to expedite the replacement at no extra cost to the contract.

B. Inspect materials and equipment for conformation to the Contract Documents and Shop Drawings and notify Engineer of deviations prior to incorporating into the Work.

1.07 HANDLING

A. Handle equipment and materials received for installation on this project in accordance with the manufacturer's recommendations, and in a manner that will prevent damage.

1.08 STORAGE AND LAYDOWN

A. Store equipment and materials prior to installation as recommended by the manufacturer.

B. Store all materials off the ground and out of mud and standing water prior to installation.

C. Store all items subject to the elements, vandalism, or theft such that they are protected and/or secure.

D. Do not store any materials on private property without written permission of the property owner or lessee. Provide copy of written permission to Owner and Engineer.

1.09 INSURANCE

A. Refer to the General Conditions and Supplemental Conditions for Contractor's insurance requirements for materials delivered but not yet incorporated into the work.

1.10 INVENTORY CONTROL

A. Store equipment and materials in a manner that provides easy access for inspection and inventory control. The Contractor shall keep a running account of all materials in storage to facilitate inspection and to estimate progress payments for materials delivered but not installed in the Work.

1.11 EQUIPMENT MAINTENANCE PRIOR TO OWNER'S ACCEPTANCE

A. The Contractor shall provide the required or manufacturer's recommended equipment maintenance during storage, during installation, and until such time as the Owner accepts the equipment for full-time operation.

1.12 SPARE PARTS

A. Provide spare parts as described in Divisions 2 – 48 of these specifications.

PART 2 PRODUCTS – NOT USED.

PART 3 EXECUTION – NOT USED.

END OF SECTION 01 60 00

PART 1 GENERAL

1.01 SUMMARY

A. Section Includes:
   1. Requirements for site maintenance during progress of the work and for final cleaning.

B. Related Sections:
   1. Section 01 11 00 - Summary of Project
   2. Section 01 50 00 - Temporary Construction Facilities
   3. Divisions 2 - 48: Cleaning requirements for specific products or work

1.02 GENERAL

A. At all times maintain areas covered by the Contract, public properties, and adjacent properties free of waste, debris and rubbish caused by construction operations.

B. At completion of work, or at such other times as directed by the Engineer, remove all waste, debris, rubbish, tools, equipment, machinery and surplus materials. Clean all sight-exposed surfaces; leave work clean and ready for occupancy.

C. At completion of project, leave project clean and ready for occupancy.

1.03 QUALITY REQUIREMENTS

A. Conduct cleaning and disposal operations to comply with local ordinances and anti-pollution laws.

B. Do not burn or bury rubbish or waste materials on project site.

C. Do not dispose of volatile, harmful or dangerous materials into drainage systems or sanitary drains. Do not dispose of wastes into streams or waterways.

D. Remove waste materials, debris and rubbish from site and legally dispose of at public or private dumping areas off Owner's property.

E. Provide approved on-site containers for collection and disposal of waste materials, debris, and rubbish as required.

F. Handle materials in a controlled manner with as few handlings as possible; do not drop or throw materials from heights.

1.04 SAFETY REQUIREMENTS

A. Standards:
   1. Maintain project in accordance with following safety and insurance standards:
      a. Applicable Federal and State requirements.

b. National Fire Protection Association 241 (NFPA).

B. Hazards Control:
1. Store volatile wastes in covered metal containers separate from other waste and remove from premises every three (3) days.
2. Prevent accumulation of wastes which create hazardous conditions.
3. Provide adequate ventilation during use of volatile or noxious substances.

PART 2 PRODUCTS

2.01 CLEANING MATERIALS

A. Select and use all cleaning materials and equipment with care to avoid scratching, marring, defacing, staining or discoloring surfaces cleaned.

B. Use only cleaning materials recommended by manufacturer of surface to be cleaned.

C. Use cleaning materials only on surfaces recommended by cleaning material manufacturer.

PART 3 EXECUTION

3.01 DURING CONSTRUCTION

A. During execution of work, clean site and public properties and dispose of waste materials, debris, and rubbish to assure that site and public properties are maintained free from accumulations of waste materials and rubbish.

B. Wet down materials and rubbish to lay dust and to prevent blowing dust.

C. Vacuum interior building areas when ready to receive finish painting and continue vacuum cleaning on an as-needed basis until building is ready for Substantial Completion or Occupancy.

D. Remove grease, dust, dirt, stains, labels, fingerprints, and other foreign materials from exposed and semi-exposed surfaces that are the finished surface.

E. Repair, patch, and touch up marred surfaces to specified finish to match adjacent surfaces.

F. Broom clean paved and smooth surfaces; rake clean other surfaces.

G. Schedule cleaning operations so that dust and other contaminants resulting from cleaning process will not fall on wet, newly painted surfaces.

H. Conduct daily cleanup of adjacent roads as required due to truck traffic and transportation of materials and workers onsite and offsite.

3.02 FINAL CLEANING

A. Employ experienced workers or professional cleaners for final cleaning. Clean each surface or unit to the condition expected in a normal, commercial building cleaning and maintenance program. Comply with manufacturer's instructions.

B. Complete the following cleaning operations before requesting inspection for Certification of Substantial Completion in accordance with Section 01 78 00 - Closeout Procedures.

1. Clean transparent materials, including mirrors and glass in doors and windows. Remove glazing compound and other substances that are noticeable vision-obscuring materials. Replace chipped or broken glass and other damaged transparent materials.
2. Clean exposed exterior and interior hard-surfaced finishes to a dust-free condition, free of stains, films and similar foreign substances. Restore reflective surfaces to their original reflective condition. Leave concrete floors broom clean.
3. Wipe surfaces of mechanical and electrical equipment. Remove excess lubrication and other substances. Clean plumbing fixtures to a sanitary condition. Clean light fixtures and lamps.
4. Clean the site, including landscaping development areas, of rubbish, litter and other foreign substances. Sweep paved areas broom clean; remove stains, spills and other foreign deposits. Rake grounds that are neither paved nor planted, to a smooth even-textured surface.
5. Remove grease, dust, dirt, stains, labels, fingerprints, protection and other foreign materials from sight-exposed interior and exterior finished surfaces; polish surfaces so designated to specified finish.
6. Repair, patch and touch up marred surfaces to specified finish to match adjacent surfaces.
7. Sweep and mop clean all resilient flooring.
8. Vacuum clean all carpet.
9. Replace air handling (conditioning) filters if units were operated during construction.
10. Vacuum clean ducts, blowers and coils, if air handling (conditioning) units were operated without filters during construction.
11. Maintain finally cleaned areas until project or designated portion thereof, is accepted by Owner.
12. Remove wasted drilling materials and leave the premises in a neat and presentable condition, equal to or better than that prior to the start of the drilling operation.

C. Removal of Protection:

1. Remove temporary protection and facilities installed for protection of work during construction.

D. Compliance:

1. Where extra materials of value remaining after completion of associated work have become Owner's property, arrange for disposition of these materials as directed.

END OF SECTION 01 70 00

PART 1 GENERAL

1.01 SUMMARY

A. Section Includes: Quality assurance, submittals, and project record document requirements for the Contractor's survey and field engineering as applicable for any supplemental work necessary for quality control.

B. Related Sections:
   1. Section 01 45 00 – Quality Requirements
   2. Section 01 78 10 – Project Record Documents

1.02 QUALITY ASSURANCE

A. The Contractor is responsible for general construction staking; the Contractor shall be fully responsible for ensuring consistency and compliance with the Contract Documents. This may necessitate the need for the Contractor to employ a Professional Land Surveyor licensed in the State of Missouri to assist with their Quality Control Program.

B. If the Contractor, sub-contractor, or vendor cause a field change requiring design or re-design of any facility, the Contractor shall employ a Professional Engineer of the required discipline, licensed in the State of Missouri, to complete the work.

1.03 SUBMITTALS FOR REVIEW

A. Submit name, address, telephone number and email address of Surveyor before starting survey work.

B. Submit evidence of Surveyor's Errors and Omissions insurance coverage in the form of an Insurance Certificate.

C. On request, submit documentation verifying accuracy of survey work.

D. Submit a copy of site drawing signed by the Land Surveyor that the elevations and locations of the Work are in conformance with Contract Documents.

E. Submit name, address, telephone number and email address of Land Surveyor / Engineer before starting field engineering work.

1.04 PROJECT RECORD DOCUMENTS

A. Maintain a complete and accurate log of control and survey work as it progresses.

B. On completion of foundation walls and major site improvements, prepare a certified survey illustrating dimensions, locations, angles, and elevations of construction and site work.

C. Submit Record Documents under provisions of Section 01 78 10 - Project Record Documents.

1.05 EXAMINATION

A. Verify locations of survey control points with the Engineer prior to starting work.

B. Verify the consistency of the staking points with the plan dimensions prior to construction. Notify the Engineer of any discrepancies discovered in accordance with the General Conditions.

C. Field check benchmarks and other points for disturbance prior to using them for layout or grade control.

1.06 SURVEY REFERENCE POINTS

A. Protect survey control, benchmarks, and reference points in accordance with the General Conditions.

B. Control datum for survey is that indicated on Drawings.

1.07 PROJECT RECORD DOCUMENT SURVEYING

A. The Contractor shall allow the Owner's Engineer reasonable access to the work for the collection of record document data. The Contractor shall notify the Engineer a minimum of one (1) working day prior to backfilling trenches and other excavations.

PART 2 PRODUCTS – NOT USED

PART 3 EXECUTION – NOT USED

END OF SECTION 01 72 50

PART 1 GENERAL

1.01 SUMMARY

A. Section Includes: Requirements for starting and adjusting equipment and products during construction.

B. Related Sections:
1. Section 01 43 50 – Manufacturer's Services
2. Section 01 79 00 – Demonstration and Training
3. Section 33 05 05 – Utility Testing Forms

1.02 GENERAL

A. Provide starting and adjusting as required by specification sections for particular equipment and systems and as required below. Conduct thorough and systematic performance test of each element of the Work.

B. Conduct thorough and systematic performance test of each element of the Work.

C. Conduct starting, adjusting, and testing in accordance with manufacturer's instructions and applicable industry standards.

D. Provide manufacturer's services for starting and adjusting as required by Section 01 43 50 – Manufacturer's Services.

E. Complete satisfactory pressure testing of piping prior to starting hydraulic systems.

G. Determine water source(s) if needed for hydrostatic and pressure testing.

1.03 SUBMITTALS

A. Submit a written report in accordance with Section 01 33 00 – Submittal Procedures that equipment or system has been properly installed and is functioning correctly.

1.04 COORDINATION

A. Coordinate starting and adjusting with requirements of Section 01 79 00 – Demonstration and Testing.

B. Notify Engineer ten (10) days in advance of starting or testing equipment or systems.

1.05 STARTING

A. Prior to starting, verify that each piece of equipment or system has been checked for proper lubrication, drive rotation, belt tension, control sequence, and for conditions which may cause damage.

B. Verify tests, meter readings, and specified electrical characteristics agree with those required by the equipment or system manufacturer.

C. Verify that wiring and support components for equipment are complete and tested.

PART 2 PRODUCTS – NOT USED

PART 3 EXECUTION

3.01 GENERAL

A. Water tower components will require start-up and testing using water.

3.02 PREPARATION

A. Contractor shall have completed all of the aforementioned test preparation and coordination prior to initiating start-up and testing.

B. Contractor shall notify the Owner and Engineer of his intent to begin start-up and testing.

C. Contractor shall prepare a plan that details the means and methods for start-up and testing of tanks and submit it to the Owner and Engineer for review and approval. Contractor's plan shall utilize site efficiencies where possible, using the installed equipment on site.

3.03 EXECUTION

A. Tank shall be filled slowly (no greater than 4 foot / 1 hour) so that if there are any structural defects, they are identified and the filling process stopped to address the defect. Structures to be filled and tested shall be full of water for at least 72 hours before calculating a % loss.

B. Contractor shall document the filling, start-up, testing and draining of structures and tanks using the Hydrostatic Leakage Testing Record For Structures form provided.

C. Contractor shall document the filling, start-up, testing and draining of pipelines using the Pipeline Pressure Testing Record form provided in Section 33 05 05 – Utility Testing Forms.

END OF SECTION 01 75 00

PART 1 GENERAL

1.01 SUMMARY

A. Section Includes: Requirements for protecting installed equipment, products, and other components of the Work during construction.

1.02 DEFINITIONS

A. The following definitions shall pertain to the requirements of this section but shall not be taken to contradict or otherwise alter the definition of these terms stated or implied elsewhere in the Contract Documents.

1. Finished Surface shall mean any surface of any component of the Work that is exposed to view during normal operation of the facility.
2. Unfinished Surface shall mean any surface of any component of the Work that is exposed to view during normal operation of the facility and is specified with a surface treatment that has not been applied.
3. Concealed Surface shall mean any surface of any component of the Work that is not exposed to view during normal operation of the facility.
4. Damaged Surface shall mean any finished surface that has been altered by physical or chemical means in such a way that the performance, appearance, durability, or other significant attribute of the specified surface treatment has been affected.
5. Contaminated Surface shall mean any unfinished surface that has been altered by physical or chemical means in such a way that a reasonable chance exists that the performance, appearance, durability, or other significant attribute of the specified surface treatment will be inhibited.
6. Surface Treatment shall mean any application of coating, laminate, paint, sealer, veneer, fabric, wax, polish, or other product specified to enhance the performance, appearance, durability, or other significant attribute of the surface.
7. Surface Damage shall mean any alteration or condition that results in a surface being a damaged surface.
8. Surface Contamination shall mean any alteration or condition that results in a surface being a contaminated surface.

1.03 GENERAL

A. Provide protection to all finished surfaces during shipping, handling, storing, fabricating, erecting, installing, and after installation. Protection shall be adequate to prevent marring, scratching, dulling, staining, abrading, denting, wrinkling, buckling, surface damage.

B. Provide protection to all unfinished surfaces during shipping, handling, storing, fabricating, erecting, installing, and after installation. Protection shall be adequate to prevent any and all surface contamination.

C. Cover, tape, mask, or otherwise shield adjacent surfaces from spills, drips, splashes, spatter, overspray, or other misapplication of paint, coating, sealant, or other liquid products.

D. Submit in writing a detailed description of the means and methods for cleaning and restoring or otherwise correcting damaged surfaces.

E. When requested by Engineer, submit in writing a detailed description of the means and methods for cleaning and restoring or otherwise correcting contaminated surfaces.

F. Normal accumulation of airborne dust particles, that are chemically inert, on a surface during routine construction operations shall not be considered surface damage. Marring, scratching, dulling, staining, or other chemical or physical alteration of a finished surface during cleaning operations shall be considered surface damage.

G. ENGINEER shall make the final determination of whether a surface is a finished, unfinished, concealed, contaminated, or damaged surface.

H. ENGINEER shall make the final determination of the acceptability of any component of the Work subject to cleaning, restoration, or any other correction of a contaminated or damaged surface.

I. Damaged and contaminated surfaces that can not be acceptably cleaned, restored, or otherwise corrected shall be considered defective in accordance with Article 13 of Document 00 70 00 – General Conditions.

J. To prevent permanent transfer of adhesives to finished surfaces, tape, masking, or other adhesive-applied covering products shall not be left in place longer than one week unless Contractor can demonstrate an adhesive removal technique that is acceptable to the Engineer and accepted in writing by the manufacturer of the product or equipment affected.

PART 2 PRODUCTS – NOT USED

PART 3 EXECUTION – NOT USED

END OF SECTION 01 76 00

PART 1 GENERAL

1.01 SUMMARY

A. Section Includes:
   1. Administrative and procedural requirements for contract closeout.

B. Related Requirements Specified Elsewhere:
   1. Section 01 11 00 – Summary of Project
   2. Section 01 33 00 – Submittal Procedures
   3. Section 01 78 10 – Project Record Documents
   4. Section 01 78 23 – Operation and Maintenance Manuals
   5. Divisions 2 – 48: Closeout submittals required in various Sections

1.02 PRELIMINARY SUBSTANTIAL COMPLETION PROCEDURES

A. Before requesting inspection for certification of Substantial Completion, complete the following. List exceptions in request.
   1. Prepare list of items to be completed or corrected (Punch List).
   2. In Application for Payment that coincides with, or first follows date Substantial Completion is claimed, show 100% completion for portion of work claimed as substantially complete. Include supporting documentation for completion as indicated in these Contract Documents and a statement showing an accounting of changes to Contract Sum.
   3. If 100% completion cannot be shown, include a list of incomplete items, value of incomplete construction, and reasons work is not complete.
   4. Advise Owner of pending insurance change-over requirements.
   5. Submit specific warranties, workmanship bonds, maintenance agreements, final certifications and similar documents.
   6. Obtain and submit releases enabling Owner unrestricted use of work and access to services and utilities; include occupancy permits, operating certificates and similar releases.
   7. Deliver tools, spare parts, extra stock and similar items.
   8. Make final change-over of permanent locks and transmit keys to Owner. Advise Owner's personnel of change-over in security provisions.
   9. Complete start-up testing of systems and instruction of Owner's operating and maintenance personnel. Discontinue or change over and remove temporary facilities from site, along with construction tools, mock-ups and similar elements.
   10. Complete final clean up requirements in accordance with Section 01 70 00 – Cleaning. Touch-up and otherwise repair and restore marred exposed finishes.

1.03 SUBSTANTIAL COMPLETION - INSPECTION PROCEDURES

A. On receipt of a request for inspection, Engineer will either proceed with inspection or advise Contractor of unfilled requirements. Engineer will prepare Certificate of Substantial Completion following inspection or advise Contractor of construction that must be completed or corrected before certificate will be issued.

B. Engineer will repeat inspection when requested and assured that work has been substantially completed.

C. Results of completed inspection will form basis of requirements for final acceptance.

1.04 FINAL ACCEPTANCE - PRELIMINARY PROCEDURES

A. Before requesting final inspection for certification of final acceptance and final payment, complete following. List exceptions in request.

1. Submit final payment request with releases and supporting documentation not previously submitted and accepted. Include certificates of insurance for products and completed operations where required.
2. Submit written declaration that all aspects of contract documents have been complied with.
3. Submit an updated final statement, accounting for final additional changes to Contract Sum.
4. Submit certified copy of Engineer's final inspection list of items to be completed or corrected, stating that each item has been completed or otherwise resolved for acceptance.
5. Submit final meter readings for utilities, measured record of stored fuel, and similar data as of date of Substantial Completion, or when Owner took possession of and responsibility for corresponding elements of work.
6. Submit a final liquidated damages settlement statement.
7. Submit evidence of final, continuing insurance coverage complying with insurance requirements.
8. Submit Project Record Documents in accordance with Section 01 78 10 – Project Record Documents and Section 01 33 00 – Submittal Procedures.
9. Submit Operation and Maintenance Manuals in accordance with Section 01 78 23 – Operation and Maintenance Manuals and Section 01 33 00 – Submittal Procedures.

1.05 REINSPECTION PROCEDURES

A. Engineer will reinspect work upon receipt of notice that work, including inspection list items from earlier inspections, has been completed in accordance with contract documents, except items whose completion has been delayed because of circumstances acceptable to Engineer.

B. Upon completion of reinspection, Engineer will prepare a certificate of final acceptance, or advise Contractor of work that is incomplete or of obligations that have not been fulfilled but are required for final acceptance.

C. If necessary, reinspection will be repeated. Contractor shall pay the cost of reinspection over two (2) times.

1.06 LIST OF INCOMPLETE ITEMS (PUNCH LIST)

A. Preparation: Submit three (3) copies of list. Include name and identification of each space and area affected by construction operations for incomplete items and items needing correction including, if necessary, areas disturbed by Contractor that are outside the limits of construction.

1. Organize list of spaces in sequential order, starting with exterior areas first and proceeding from lowest floor to highest floor.
2. Organize items applying to each space by major element, including categories for ceiling, individual walls, floors, equipment, and building systems.
3. Include the following information at the top of each page:
   a. Project name.
   b. Date.
   c. Name of Engineer / Architect and Project Representative.
   d. Name of Contractor.
   e. Page number.

1.07 WARRANTIES

A. Submittal Time: Submit written warranties on request of Engineer / Architect for designated portions of the Work where commencement of warranties other than date of Substantial Completion is indicated.

B. Partial Occupancy: Submit properly executed warranties within 15 days of completion of designated portions of the Work that are completed and occupied or used by Owner during construction period by separate agreement with Contractor.

C. Organize warranty documents into an orderly sequence based on the table of contents of the Project Manual.

1. Bind warranties and bonds in heavy-duty, 3-ring, vinyl-covered, loose-leaf binders, thickness as necessary to accommodate contents, and sized to receive 8-1/2 by 11-inch (215 by 280-mm) paper.
2. Provide heavy paper dividers with plastic-covered tabs for each separate warranty. Mark tab to identify the product or installation. Provide a typed description of the product or installation, including the name of the product and the name, address, and telephone number of Installer.
3. Identify each binder on the front and spine with the typed or printed title “WARRANTIES,” Project name, and name of Contractor.

D. Provide additional copies of each warranty to include in operation and maintenance manuals.

1.08 FINAL APPLICATION FOR PAYMENT - SUBMITTAL ITEMS

A. Application for Payment.

B. Consent of Surety Company to Final Payment

C. Contractor's Affidavit of Release of Liens

D. Contractor's Affidavit of Debts and Claims

E. Final Waivers of Lien from Subcontractors and Suppliers.

F. Duly execute all submittals before delivery to Engineer.

G. Engineer will process final application in accordance with General Conditions.

PART 2 PRODUCTS

2.01 MATERIALS

A. Cleaning Agents: Use cleaning materials and agents recommended by manufacturer or fabricator of the surface to be cleaned. Do not use cleaning agents that are potentially hazardous to health or property or that might damage finished surfaces.

PART 3 EXECUTION

3.01 FINAL CLEANING

A. General: Provide final cleaning. Conduct cleaning and waste-removal operations to comply with local laws and ordinances and Federal and local environmental and antipollution regulations.

B. Cleaning: Employ experienced workers or professional cleaners for final cleaning. Clean each surface or unit to condition expected in an average commercial building cleaning and maintenance program. Comply with manufacturer's written instructions.

1. Complete the following cleaning operations before requesting inspection for certification of Substantial Completion for entire Project or for a portion of Project:
   a. Clean Project site, yard, and grounds, in areas disturbed by construction activities, including landscape development areas, of rubbish, waste material, litter, and other foreign substances.
   b. Sweep paved areas broom clean. Remove petrochemical spills, stains, and other foreign deposits.
   c. Rake grounds that are neither planted nor paved to a smooth, even-textured surface.

d. Remove tools, construction equipment, machinery, and surplus material from Project site.
e. Remove snow and ice to provide safe access to building.
f. Clean exposed exterior and interior hard-surfaced finishes to a dirt-free condition, free of stains, films, and similar foreign substances. Avoid disturbing natural weathering of exterior surfaces. Restore reflective surfaces to their original condition.
g. Remove debris and surface dust from limited access spaces, including roofs, plenums, shafts, trenches, equipment vaults, manholes, attics, and similar spaces.
h. Sweep concrete floors broom clean in unoccupied spaces.
i. Vacuum carpet and similar soft surfaces, removing debris and excess nap; shampoo if visible soil or stains remain.
j. Clean transparent materials, including mirrors and glass in doors and windows. Remove glazing compounds and other noticeable, vision-obscuring materials. Replace chipped or broken glass and other damaged transparent materials. Polish mirrors and glass, taking care not to scratch surfaces.
k. Remove labels that are not permanent.
l. Touch and otherwise repair and restore marred, exposed finishes and surfaces. Replace finishes and surfaces that cannot be satisfactorily repaired or restored or that already show evidence of repair or restoration.
    i. Do not paint over “UL” and similar labels, including mechanical and electrical nameplates.
m. Wipe surfaces of mechanical and electrical equipment, elevator equipment, and similar equipment. Remove excess lubrication, paint and mortar droppings, and other foreign substances.
n. Replace parts subject to unusual operating conditions.
o. Clean plumbing fixtures to a sanitary condition, free of stains, including stains resulting from water exposure.
p. Replace disposable air filters and clean permanent air filters. Clean exposed surfaces of diffusers, registers, and grills.
q. Clean ducts, blowers, and coils if units were operated without filters during construction.
r. Clean light fixtures, lamps, globes, and reflectors to function with full efficiency. Replace burned-out bulbs, and those noticeably dimmed by hours of use, and defective and noisy starters in fluorescent and mercury vapor fixtures to comply with requirements for new fixtures.
s. Leave Project clean and ready for occupancy.

C. Pest Control: Engage an experienced, licensed exterminator to make a final inspection and rid Project of rodents, insects, and other pests. Prepare a report.

D. Comply with safety standards for cleaning. Do not burn waste materials. Do not bury debris or excess material on Owner’s property. Do not discharge volatile, harmful, or dangerous materials into drainage systems. Remove waste materials from Project site and dispose of lawfully.

END OF SECTION 01 78 00

PART 1 GENERAL

1.01 SUMMARY

A. Section Includes:
   1. Requirements for preparation of Record Documents (also known as "As-Builts").

B. Related Requirements Specified Elsewhere:
   1. Section 01 33 00 – Submittal Procedures
   2. Section 01 78 00 – Closeout Procedures

1.02 DESCRIPTION

A. Project Record Documents are a complete set of Contract Documents and Drawings prepared by Contractor from a set of Base Documents furnished by Engineer and from Field Sets of Contract Documents.

B. Field Sets of Contract Documents be used for field construction purposes shall be maintained and annotated by the Contractor during construction to record approved changes, additions, addenda, options and deviations and pertinent field notes to Contract Documents.

1.03 SUBMITTALS

A. In accordance with Section 01 33 00 – Submittal Procedures.

B. Submit, at Substantial Completion, one set of Project Record Documents.

PART 2 PRODUCTS

2.01 BASE DOCUMENTS

A. Engineer will furnish the Contractor with one (1) set of Contract Drawings (black line prints), one set of Contract Specifications and one set of Contract Addenda to be used in preparation of Record Documents.

2.02 RECORD DOCUMENTS

A. Record Documents shall not be used for field construction purposes.

B. All changes, additions, addenda, options and deviations and pertinent field notes shall be clearly marked using neat ruled lines and legible notes and dimensions as follows.
   1. Options and deviations to Contract Documents with red ballpoint pen.
   2. All notes, explanations, and sketches with blue ballpoint pen.

2.03 FIELD SETS

A. Field Sets of Contract Documents shall be used for field construction purposes and shall be marked with information required for Project Record Documents.

2.04 INFORMATION TO RECORD

A. Label "PROJECT RECORD DOCUMENTS" in 2" high printed letters on each document.

1. Mark Record Prints to show the actual installation where installation varies from that shown originally. Require individual or entity who obtained record data, whether individual or entity is Installer, subcontractor, or similar entity, to prepare the marked-up Record Prints.
   a. Give particular attention to information on concealed elements that would be difficult to identify or measure and record later.
   b. Accurately record information in an understandable drawing technique.
   c. Record data as soon as possible after obtaining it. Record and check the markup before enclosing concealed installations.
   d. Mark the Contract Drawings or Shop Drawings, whichever is most capable of showing actual physical conditions, completely and accurately. If Shop Drawings are marked, show cross-reference on the Contract Drawings.
   e. Mark important additional information that was either shown schematically or omitted from original Drawings.
   f. Note Construction Change Directive numbers, alternate numbers, Change Order numbers, and similar identification, where applicable.
2. Record actual construction to include but not be limited to the following:
   a. Depths of various elements of foundation in relation to floor level.
   b. Horizontal and vertical location of underground utilities and appurtenances referenced to permanent surface improvements.
   c. Location of internal utilities and appurtenances concealed in construction referenced to visible and accessible features of structure.
   d. Field changes of dimension and detail.
   e. Changes made by Change Order.
   f. Details not on original contract drawings.

PART 3 EXECUTION

3.01 MAINTENANCE

A. Keep record documents up-to-date during progress of the Work by marking any and all changes, additions, addenda, options and deviations and pertinent field notes at the time the work is executed.

B. Indicate on Field Sets all alterations and deviations from original documents known to Each Contractor's and Sub-Contractor's Superintendent on job during course of completion of project.

C. Transfer required information to Record Documents using neat ruled lines and legible notes and dimensions.

3.02 STORAGE

A. Store documents in temporary field office apart from documents used for field construction.

B. Provide files and racks for document storage.

C. Maintain documents in clean, dry legible condition. Protect from deterioration and loss in secure, fire-resistive location.

D. Make documents available during normal working hours for inspection by Engineer and Owner.

3.03 COMPLETION

A. Maintain and store record documents until satisfactory completion of the Contract and submittal of record documents to the Engineer.

B. The contract closeout and final payment under this contract **will not** be finalized and approved until a complete and accurate set of record documents, as described above, have been submitted to the Engineer, reviewed for accuracy and accepted.

END OF SECTION 01 78 10

PART 1 GENERAL

1.01 DESCRIPTION

A. Work Includes:

1. Compile product data and related information appropriate for Owner's maintenance and operation of products provided under Contract.
2. Instruct Owner's personnel in maintenance of products and in operation of equipment and systems.
3. Each Contractor and Sub-Contractor shall prepare copies of Manuals as specified herein and deliver to Engineer.

1.02 RELATED SECTIONS

A. Section 01 78 00 – Closeout Procedures

B. Section 01 78 10 – Project Record Documents

C. Section 01 79 00 – Demonstration and Training

1.03 SUBMITTALS

A. Form:

1. Manufacturer's standard product or equipment data of same type and form furnished to manufacturer's maintenance personnel.

B. Booklet shall be bound in three-ring-loose-leaf binder with following title lettered on the front, "Record and Information Booklet" and shall include official project title. No sheets larger than 8-1/2" x 11 inches shall be used except sheets that may be neatly folded to 8-1/2 x 11 inches and used as pull-out.

1.04 MANUAL CONTENT

A. Neatly typewritten table of contents for each volume, arranged in systematic order. Follow Project Manual format.

1. Contractor, name of responsible principal, address and telephone number.
2. List of each product required to be included, indexed to volume content.
3. List with each product, the name, address and telephone number of:
   a. Subcontractor
   b. Maintenance contractor, as appropriate
   c. Identify area of responsibility of each
   d. Local supply source for parts and replacement

B. Product Data:

1. Include only sheets pertinent to specific product.
2. For equipment items, include model and serial numbers on the cover page.
3. Annotate each sheet to:
   a. Clearly identify specific product or part installed.
   b. Clearly identify data applicable to installation.
   c. Delete references to inapplicable installation.

C. Drawings:

1. Supplement product data with drawings as necessary to clearly illustrate:
   a. Relationship of component parts of equipment and systems.
   b. Control and flow diagrams.
2. Coordinate drawings with information in Product Record Documents to assure correct illustration of completed installation.
3. Do not use Project Record Documents as maintenance drawings.

D. Written text, as required to supplement product data for particular installation:

1. Organize in consistent format under separate headings for different procedures.
2. Provide logical sequence of instructions for each procedure.

E. Copy of each warranty, bond and service contract issued.

1. Provide information sheet for Owner's personnel. Give:
   a. Proper procedures in event of failure.
   b. Instances which might affect validity of warranties or bonds.

F. Emergency instructions.

G. Spare parts list.

1.05 MANUAL FOR MATERIALS AND FINISHES

A. Submit two copies of complete manual in final form.

B. Content for architectural products, applied materials and finishes:

1. Manufacturer's data, giving full information on products.
   a. Catalog number, size, composition.
   b. Color and texture designations.
   c. Information required for re-ordering special-manufactured products.
2. Instructions for care and maintenance.
   a. Manufacturer's recommendations for types of cleaning agents and methods.
   b. Cautions against cleaning agents and methods detrimental to product.
   c. Recommended cleaning and maintenance schedule.

C. Content, for moisture-protection and weather-exposed products.
   1. Manufacturer's data, giving full product information.
      a. Applicable standards
      b. Chemical composition
      c. Installation details
   2. Instructions for inspection, maintenance and repair.

D. Additional maintenance data requirements - Respective Specification Sections.

E. Provide complete information for products specified in all sections of Specifications.

1.06 MANUAL FOR EQUIPMENT AND SYSTEMS

A. Submit six (6) copies (two for Owner, two for Engineer, two for Contractor) of complete manual in final form and one digital copy per 13 21 10.

B. Content, for each unit of equipment and system, as appropriate:
   1. Description of unit and component parts.
      a. Function, normal operating characteristics and limiting conditions.
      b. Performance curves, engineering data and tests.
      c. Complete nomenclature and commercial number of all replaceable parts.
   2. Operating Procedures:
      a. Start-up, break-in, routine and normal operating instructions.
      b. Regulation, control, stopping, shut-down and emergency instructions.
      c. Summer and winter operating instructions.
      d. Special operating instructions.
   3. Maintenance procedures:
      a. Routine operations.
      b. "Trouble-shooting" guide.
      c. Disassembly, repair and reassembly.
      d. Alignment, adjusting and checking.
   4. Servicing and lubrication schedule:
      a. List of required lubricants.
   5. Manufacturer's current printed operating and maintenance instructions.
   6. Description of sequence of operation by control manufacturer.
   7. Original manufacturer's parts list, illustrations, assembly drawings and diagrams required for maintenance.
      a. Predicted life of parts subject to wear.
      b. Items recommended to be stocked as spare parts.
   8. As-installed control diagrams by control manufacturer.
   9. Each contractor's coordination drawings.
      a. As-installed color-coded piping diagrams.
   10. Charts of valve tag numbers, with location and function of each valve.
   11. List of original manufacturer's spare parts, manufacturer's current prices and recommended quantities to be maintained in storage.

12. Other data as required in pertinent specification sections.

C. Content, for each electric and electronic system, as appropriate:
   1. Description of system and component parts:
      a. Function, normal operating characteristics and limiting conditions.
      b. Performance curves, engineering data and tests.
      c. Complete nomenclature and commercial number of replaceable parts.
   2. Circuit directories of panelboards.
      a. Electrical service
      b. Controls
      c. Communications
   3. As-installed color-coded wiring diagrams.
   4. Operating procedures:
      a. Routine and normal operating instructions.
      b. Sequences required.
      c. Special operating instructions.
      d. Passwords, where applicable.
   5. Maintenance procedures:
      a. Routine operations.
      b. "Trouble-shooting" guide.
      c. Disassembly, repair and reassembly
      d. Adjustment and checking.
   6. Manufacturer's current printed operating and maintenance instructions.
   7. List of original manufacturer's spare parts, manufacturer's current prices, and recommended quantities to be maintained in storage.
   8. Other data as required in pertinent specification sections.

D. Prepare and include additional data when need for such data becomes apparent during instruction of Owner's personnel.

E. Additional requirements for operating and maintenance data - respective Specification Sections.

F. Provide complete information for products specified in:
   1. Plumbing Systems
   2. HVAC Systems
   3. Controls and Instrumentation
   4. Motors (Electrical)
   5. Power Transmission
   6. Service and Distribution
   7. Lighting
   8. Special Systems
   9. Water and wastewater equipment

1.07 EMERGENCY MANUALS

A. Content: Organize manual into a separate section for each of the following:
   1. Type of emergency.
   2. Emergency instructions.
   3. Emergency procedures.

B. Type of Emergency: Where applicable for each type of emergency indicated below, include instructions and procedures for each system, subsystem, piece of equipment, and component:
   1. Fire.
   2. Flood.
   3. Gas leak.
   4. Water leak.
   5. Power failure.
   6. Water outage.
   7. System, subsystem, or equipment failure.
   8. Chemical release or spill.

C. Emergency Instructions: Describe and explain warnings, trouble indications, error messages, and similar codes and signals. Include responsibilities of Owner's operating personnel for notification of Installer, supplier, and manufacturer to maintain warranties.

D. Emergency Procedures: Include the following, as applicable:
   1. Instructions on stopping.
   2. Shutdown instructions for each type of emergency.
   3. Operating instructions for conditions outside normal operating limits.
   4. Required sequences for electric or electronic systems.
   5. Special operating instructions and procedures.

1.08 SUBMITTAL SCHEDULE

A. Submit two (2) copies of draft of proposed formats and outlines of contents 30 business days prior to Substantial Completion.
   1. Engineer/Architect will review draft and return one copy with comments within five (5) business days after receipt.

B. Submit one (1) copy of completed data in final form 15 business days prior to Substantial Completion.
   1. Copy will be returned within five business days after Substantial Completion, with comments.

C. Submit specified number of copies of approved data in final form at least 10 business days before final acceptance or approval.

1.09 INSTRUCTION OF OWNER'S PERSONNEL

A. Prior to final inspection or acceptance, fully instruct Owner's designated operating and maintenance personnel in operation, adjustment and maintenance of all products, equipment and systems.

B. Arrange for each installer of equipment that requires regular maintenance to meet with Owner's personnel to provide instruction in proper operation and maintenance. If installers are not experienced in procedures, provide instruction by manufacturer's representatives.
Include a detailed review of the following items:

1. Maintenance manuals.
2. Record documents.
3. Spare parts and materials.
4. Tools.
5. Lubricants.
6. Fuels.
7. Identification systems.
8. Control sequences.
9. Hazards.
10. Cleaning.
11. Warranties and bonds.
12. Maintenance agreements and similar continuing commitments.

PART 2 PRODUCTS – (NOT APPLICABLE)

PART 3 EXECUTION

3.01 MANUAL PREPARATION

A. Operation and Maintenance Documentation Directory: Prepare a separate manual that provides an organized reference to emergency, operation, and maintenance manuals.

B. Emergency Manual: Assemble a complete set of emergency information indicating procedures for use by emergency personnel and by Owner’s operating personnel for types of emergencies indicated.

C. Manual for Materials and Finish: Assemble a complete set of maintenance data indicating care and maintenance of each product, material, and finish incorporated into the Work.

D. Operation and Maintenance Manuals: Assemble a complete set of operation and maintenance data indicating operation and maintenance of each system, subsystem, and piece of equipment not part of a system.

1. Engage a factory-authorized service representative to assemble and prepare information for each system, subsystem, and piece of equipment not part of a system.
2. Prepare a separate manual for each system and subsystem, in the form of an instructional manual for use by Owner's operating personnel.

E. Manufacturers' Data: Where manuals contain manufacturers' standard printed data, include only sheets pertinent to product or component installed. Mark each sheet to identify each product or component incorporated into the Work. If data include more than one item in a tabular format, identify each item using appropriate references from the Contract Documents. Identify data applicable to the Work and delete references to information not applicable.
1. Prepare supplementary text if manufacturers' standard printed data are not available and where the information is necessary for proper operation and maintenance of equipment or systems.

F. Drawings: Prepare drawings supplementing manufacturers' printed data to illustrate the relationship of component parts of equipment and systems and to illustrate control sequence and flow diagrams. Coordinate these drawings with information contained in Record Drawings to ensure correct illustration of completed installation.
1. Do not use original Project Record Documents as part of operation and maintenance manuals.
2. Comply with requirements of newly prepared Record Drawings in Section 01 78 10 - Project Record Documents.

G. Comply with Section 01 78 00 - Closeout Procedures for schedule for submitting operation and maintenance documentation.

END OF SECTION 01 78 23

PART 1 GENERAL

1.01 SUMMARY

A. Section Includes: Requirements for demonstration of operation and training of Owner's personnel for equipment, systems, and complete Work, excluding Owner furnished equipment.

B. Related Sections:
1. Section 01 43 50 - Manufacturer's Service
2. Section 01 78 23 - Operation and Maintenance Manuals
3. Section 01 75 00 - Starting and Adjusting

1.02 SUBMITTALS

A. For each equipment or system provided, submit approval of formal training procedure by equipment or system manufacturer or authorization of instructor by equipment or system manufacturer.

B. Submit schedule of demonstration and training sessions.

1.03 COORDINATION

A. Coordinate demonstration and training with Owner.

B. Coordinate demonstration and training with equipment and system manufacturers.

C. Coordinate demonstration and training with Startup procedures as required by Section 01 75 00 – Starting and Adjusting.

1.04 TRAINING

A. Provide training as required by specification sections for particular equipment and systems and as required below.

B. Provide formal training by manufacturer's authorized instructor or as approved by manufacturer for all systems and equipment.

C. Provide preliminary O&M Manuals as required by Section 01 78 23 - Operation and Maintenance Manuals to serve as the basis for training.

D. Prepare and insert additional data in operations and maintenance manuals when need for additional data becomes apparent during instruction.

E. Provide training to Owner’s personnel selected by Owner (not to exceed 10 persons).

1.05 DEMONSTRATION

A. Provide demonstration as required by specification sections for particular equipment and systems and as required below.

B. For all equipment and systems, demonstrate compliance with the requirements of the Contract Documents, start-up, operation, control, adjustment, trouble-shooting, servicing, maintenance, and shutdown of each item of equipment to Engineer and Owner’s personnel.

C. Demonstrate operation and maintenance of Products to Owner's personnel two (2) weeks prior to date of final inspection.

D. Prepare and insert additional data in operations and maintenance manuals when need for additional data becomes apparent during instruction.

1.06 QUALITY ASSURANCE

A. Facilitator Qualifications: (Reserved)

B. Instructor Qualifications: A factory-authorized service representative, complying with requirements in Division 1 Section “Quality Requirements,” experienced in operation and maintenance procedures and training.

C. Photographer Qualifications: (Reserved).

D. Preinstruction Conference: (Reserved)

1.07 COORDINATION

A. Coordinate instruction schedule with Owner’s operations. Adjust schedule as required to minimize disrupting Owner’s operations.

B. Coordinate instructors, including providing notification of dates, times, length of instruction time, and course content.

C. Coordinate content of training modules with content of approved emergency, operation, and maintenance manuals. Do not submit instruction program until operation and maintenance data has been reviewed and approved by Engineer.

PART 2 PRODUCTS

2.01 INSTRUCTION PROGRAM

A. Program Structure: Develop an instruction program that includes individual training modules for each system and equipment not part of a system, as required by individual Specification Sections, and as follows:

1. Motorized doors, including overhead coiling doors, overhead coiling grilles, and automatic entrance doors.
2. Equipment, including stage equipment, projection screens, loading dock equipment, waste compactors, food-service equipment, residential appliances, and laboratory fume hoods.
3. Fire-protection systems, including fire alarm, fire pumps, and fire-extinguishing systems.
4. Intrusion detection systems.
5. Conveying systems, including elevators, wheelchair lifts, escalators and cranes.
6. Medical equipment, including medical gas equipment and piping.
7. Laboratory equipment, including laboratory air and vacuum equipment and piping.
8. Heat generation, including boilers, feedwater equipment, pumps, steam distribution piping and water distribution piping.
9. Refrigeration systems, including chillers, cooling towers, condensers, pumps and distribution piping.
10. HVAC systems, including air-handling equipment, air distribution systems and terminal equipment and devices.
11. HVAC instrumentation and controls.
12. Electrical service and distribution, including transformers, switchboards, panelboards, uninterruptible power supplies and motor controls.
13. Packaged engine generators, including transfer switches.
14. Lighting equipment and controls.
15. Communication systems, including intercommunication, surveillance, clocks and programming, voice and data and television equipment.

B. Training Modules: Develop a learning objective and teaching outline for each module. Include a description of specific skills and knowledge that participant is expected to master. For each module, include instruction for the following:
   1. Basis of System Design, Operational Requirements, and Criteria: Include the following:
      a. System, subsystem, and equipment descriptions.
      b. Performance and design criteria if Contractor is delegated design responsibility.
      c. Operating standards.
      d. Regulatory requirements.
      e. Equipment function.
      f. Operating characteristics.
      g. Limiting conditions.
      h. Performance curves.

   2. Documentation: Review the following items in detail:
      a. Emergency manuals.
      b. Operations manuals.
      c. Maintenance manuals.
      d. Project Record Documents.
      e. Identification systems.
      f. Warranties and bonds.

g. Maintenance service agreements and similar continuing commitments.

3. Emergencies: Include the following, as applicable.
   a. Instructions on meaning of warnings, trouble indications, and error messages.
   b. Instructions on stopping.
   c. Shutdown instructions for each type of emergency.
   d. Operating instructions for conditions outside of normal operating limits.
   e. Sequences for electric or electronic systems.
   f. Special operating instructions and procedures.

4. Operations: Include the following, as applicable:
   a. Startup procedures.
   b. Equipment or system break-in procedures.
   c. Routine and normal operating instructions.
   d. Regulation and control procedures.
   e. Control sequences.
   f. Safety procedures.
   g. Instructions on stopping.
   h. Normal shutdown instructions.
   i. Operating procedures for emergencies.
   j. Operating procedures for system, subsystem, or equipment failure.
   k. Seasonal and weekend operating instructions.
   l. Required sequences for electric or electronic systems.
   m. Special operating instructions and procedures.

5. Adjustments: Include the following:
   a. Alignments.
   b. Checking adjustments.
   c. Noise and vibration adjustments.
   d. Economy and efficiency adjustments.

6. Troubleshooting: Include the following:
   a. Diagnostic instructions.
   b. Test and inspection procedures.

7. Maintenance: Include the following:
   a. Inspection procedures.
   b. Types of cleaning agents to be used and methods of cleaning.
   c. List of cleaning agents and methods of cleaning detrimental to product.
   d. Procedures for routine cleaning.
   e. Procedures for preventive maintenance.
   f. Procedures for routine maintenance.
   g. Instruction on use of special tools.

8. Repairs: Include the following:
    a. Diagnosis instructions.
    b. Repair instructions.
    c. Disassembly; component removal, repair, and replacement; and reassembly instructions.
    d. Instructions for identifying parts and components.
    e. Review of spare parts needed for operation and maintenance.

PART 3 EXECUTION

3.01 PREPARATION

A. Assemble educational materials necessary for instruction, including documentation and training module. Assemble training modules into a combined training manual.

B. Set up instructional equipment at instruction location.

3.02 INSTRUCTION

A. Facilitator: (Reserved)

B. Engage qualified instructors to instruct Owner's personnel to adjust, operate, and maintain systems, subsystems, and equipment not part of a system.
    1. Engineer/Architect will furnish an instructor to describe basis of system design, operational requirements, criteria, and regulatory requirements.
    2. Owner will furnish an instructor to describe Owner's operational philosophy.
    3. Owner will furnish Contractor with names and positions of participants.

C. Scheduling: Provide instruction at mutually agreed on times. For equipment that requires seasonal operation, provide similar instruction at start of each season.
    1. Schedule training with Owner through Project Representative with at least seven (7) day's advance notice.

D. Evaluation: At conclusion of each training module, assess and document each participant's mastery of module by use of a demonstration performance-based test.

E. Cleanup: Collect used and leftover educational materials and give to Owner. Remove instructional equipment. Restore systems and equipment to condition existing before initial training use.

3.03 DEMONSTRATION AND TRAINING VIDEOS (RESERVED)

END OF SECTION 01 79 00

PART 1 GENERAL

1.01 SUMMARY

A. Section Includes: Requirements for starting and adjusting equipment and products during construction.

B. Related Sections:
   1. Section 01 43 50 – Manufacturer's Services
   2. Section 01 79 00 – Demonstration and Training

1.02 GENERAL

A. Provide starting and adjusting as required by specification sections for equipment and systems and as required below. Conduct thorough and systematic performance test of each element of the Work.
   1. Division 22 - Plumbing
   2. Division 26 - Electrical
   3. Division 40 – Process Interconnections

B. Conduct thorough and systematic performance test of each element of the Work.

1.03 SUBMITTALS

A. Submit a written report in accordance with Section 01 33 00 – Submittal Procedures that equipment or system has been properly installed and is functioning correctly.

1.04 OWNER'S RESPONSIBILITIES

A. Assign operation and maintenance personnel and schedule them to participate in starting and adjusting activities including, but not limited to, the following:
   1. Coordination meetings
   2. Training in operation and maintenance of systems and equipment.
   3. Testing meetings.
   4. Demonstration of operation of systems and equipment.

B. Provide utility services required for the commissioning process.

1.05 CONTRACTOR'S RESPONSIBILITIES

A. Each Contractor shall assign representatives with expertise and authority to act on behalf of the Contractor and schedule them to participate in and perform commissioning team activities including, but not limited to, the following:
   1. Participate in construction meetings
   2. Participate in operation and maintenance training sessions
   3. Certify that work is complete and systems are operational according to the contract documents, including calibration of instruments and controls.

4. Coordinate the inspection and testing of the installed equipment by the manufacturer's qualified representative.
5. Evaluate and perform corrective actions on items identified during equipment installation and startup review by qualified personnel.

B. Provide manufacturer's services for starting and adjusting as required by Section 01 43 50 – Manufacturer's Services.

C. Complete satisfactory pressure testing of piping prior to starting hydraulic systems.

D. Test and Inspection reports shall be turned over to the engineer once received by the manufacturer's representative.

1.06 ENGINEER'S RESPONSIBILITIES

A. Participate in construction meetings.

B. Participate in operation and maintenance training of the owner.

C. Participate in testing meetings.

D. Participate in demonstrations to owner of operating systems, subsystems and equipment.

1.07 QUALITY ASSURANCE

A. Instructor Qualifications: Factory-authorized service representatives, experienced in training, operation, and maintenance procedures for installed systems, subsystems, and equipment.

B. Test Equipment Calibration: Comply with test equipment manufacturer's calibration procedures and intervals. Recalibrate test instruments immediately whenever instruments have been repaired following damage or dropping. Affix calibration tags to test instruments. Instruments shall have been calibrated within six (6) months prior to use.

1.08 COORDINATION

A. Coordination Meetings: Conduct meetings as necessary to review progress of startup, scheduling of owner's staff and facilities and plan future events

B. Pretest Meetings: Conduct pretest meetings to review startup reports, inspection reports, testing procedures and manufacturer's requirements for equipment to be tested.

1.09 STARTING

A. Prior to starting, verify that each piece of equipment or system has been checked for proper lubrication, drive rotation, belt tension, control sequence, and for conditions which may cause damage.

B. Verify tests, meter readings, and specified electrical characteristics agree with those required by the equipment or system manufacturer.

C. Verify that wiring and support components for equipment are complete and tested.

PART 2 PRODUCTS – NOT USED

PART 3 EXECUTION – NOT USED

END OF SECTION 01 91 00

CITY OF GRAIN VALLEY

WATER TOWER UPGRADE

DIVISION 02 – EXISTING CONDITIONS

TABLE OF CONTENTS

SECTION	TITLE	PAGE NUMBER
02 30 00	Subsurface Investigation (Geotech Available) Geotechnical Report in Appendix A	02 30 00 1-2

PART 1 GENERAL

1.01 SUMMARY

A. Section Includes:
1. Information available to BIDDERS, provided separate from the Contract Documents
2. Requirements of the contract regarding differing subsurface conditions.

1.02 SOIL REPORT

A. Soil borings were taken throughout the project area at the time of original construction. Copies of the boring logs and associated soil reports with any amendments will be provided electronically, separate from the Contract Documents. Soil boring reports are titled:

Terracon

Grain Valley Water Tower

1201 NE Tyer Road

Grain Valley, Missouri

Terracon Project No. 02235134 January 20, 2025

B. The soil boring logs and reports do not relieve the Contractor of his responsibility to take additional borings as he deems appropriate to determine the subsurface conditions that will be encountered or to assume the risk of encountering conditions which may not be consistent with the available borings. The Engineer and Owner do not assume any responsibility for the accuracy or adequacy of the soil borings. Contractor will bear all costs associated with any additional subsurface investigations that he deems necessary to determine subsurface conditions.

1.03 SOIL BORINGS

A. Information presented in the boring logs are representative of the exact location shown in the logs and supporting information.

B. The soil borings cannot reveal all conditions that exist on the site and do not relieve the Contractor of his responsibility to take additional borings as he deems appropriate to determine the subsurface conditions that will be encountered or to assume the risk of encountering conditions that may not be consistent with the available borings.

C. The Contractor will be responsible for all costs associated with additional subsurface investigations.

D. The recommendations described in the soil report shall not be construed as a requirement of this bid package, unless specifically referenced in the Specifications.

1.04 DIFFERING SUBSURFACE CONDITIONS:

A. In the event subsurface or latent physical conditions are found materially different from those indicated in these Documents and differing materially from those ordinarily encountered and generally recognized as inherent in the character of work covered in these Contract Documents, the Contractor shall promptly, and before such conditions are disturbed, notify the Engineer in writing of such changed conditions.

B. The Engineer will investigate such conditions promptly and following this investigation, the Contractor shall proceed with the work, unless otherwise instructed by the Engineer. If the Engineer finds that such conditions materially differ and cause an increase or decrease in the cost of, or in the time required for performing the work, the Engineer will recommend to the Owner the amount of adjustment in cost and time he considers reasonable. The Owner will make the final decision on all change orders to the contract regarding any adjustment in cost or time for completion.

PART 2 PRODUCTS – NOT USED

PART 3 EXECUTION – NOT USED

END OF SECTION 02 30 00

CITY OF GRAIN VALLEY

WATER TOWER UPGRADE

DIVISION 03 – CONCRETE

TABLE OF CONTENTS

SECTION NUMBER	SECTION TITLE	PAGE NUMBER
03 05 00	Common Work Results for Concrete	03 05 00 1-5
03 05 60	Precast Concrete Products	03 05 60 1-10
03 11 00	Concrete Forming	03 11 00 1-6
03 15 00	Concrete Accessories	03 15 00 1-4
03 20 00	Concrete Reinforcing	03 20 00 1-6
03 31 00	Structural Concrete	03 31 00 1-17
03 39 00	Concrete Curing	03 39 00 1-5
03 60 00	Grouting	03 60 00 1-6

PART 1 GENERAL

1.01 RELATED DOCUMENTS

A. Drawings and general provisions of the Contract, including General and Supplementary Conditions and Division 01 Specification Sections, apply to this Section.

1.02 SUMMARY

A. Section Includes:
   1. Temporary shoring of existing structure and pipes.
   2. Protection and finishing of concrete surfaces and reinforcement steel associated with concrete removal.
   3. Removal and satisfactory disposal of damaged, spalled, and unsound concrete foundations, walls, slabs, and/or existing pipe at locations shown in the plans and designated by the Engineer.
   4. Replacement of the removed material with new concrete and/or modified concrete patching material, including cleaning exposed reinforcing steel, drilling and grouting dowels for supporting and fastening additional reinforcement if needed, applying a chemical bonding agent; constructing the necessary form work, placing, consolidating and finishing the replacement concrete, forming joints and curing the repaired areas.

B. Related Sections:
   1. Section 01 33 00 – Submittal Procedures
   2. Section 01 45 00 – Quality Requirements
   3. Section 03 11 00 – Concrete Forming
   4. Section 03 20 00 – Concrete Reinforcing
   5. Section 03 31 00 – Structural Concrete
   6. Section 03 39 00 – Concrete Curing
   7. Section 13 21 10 – Composite Elevated Water Storage Tank

C. References:
   1. ACI 301-16 – Specifications for Structural Concrete.
   2. ASTM C932 – Standard Specification for Surface-Applied Bonding Compounds for Exterior Plastering.
   3. ASTM C1059 – Standard Specification for Latex Agents for Bonding Fresh to Hardened Concrete.
   4. ASTM C1116 – Standard Specification for Fiber-Reinforced Concrete.

1.03 DEFINITIONS

A. (RESERVED)

1.04 SUBMITTALS

A. Submit under the provisions of Division 01 – Section 01 33 00 – Submittal Procedures.

B. Refer to Section 03 31 00 for product data, material certifications, design mixtures, and concrete mix properties required for submittal.

C. Product Data: Submit data on finishing materials

1.05 QUALITY ASSURANCE

A. Perform work in accordance with ACI 301.

1. Maintain one copy of document on site.

1.06 DELIVERY, STORAGE, AND HANDLING

A. Deliver, store, protect, and handle products in accordance with requirements set forth by the Engineer and product manufacturer.

B. Deliver curing materials in manufacturer's packaging including application instructions.

PART 2 PRODUCTS

2.01 EQUIPMENT

A. The equipment used shall be subject to approval of the Engineer.

2.02 CONCRETE MATERIALS

A. Refer to Section 03 31 00 for concrete materials.

2.03 ADMIXTURES

A. Refer to Section 03 31 00 for admixtures.

2.04 RELATED MATERIALS

A. Epoxy Bonding Adhesive: ASTM C 881, two-component epoxy resin, capable of humid curing and bonding to damp surfaces, of class suitable for application temperature and of grade to suit requirements, and as follows:

1. Types IV and V, load bearing, for bonding hardened or freshly mixed concrete to hardened concrete.

2.05 REPAIR MATERIALS

A. Refer to Section 03 31 00 for repair materials.

2.06 CONCRETE MIX

A. Concrete mix for concrete repair shall be Mix Design A, as specified in Section 03 31 00, with a maximum coarse aggregate size of 1/2 inch.

1. Concrete mix for concrete repair shall include fiber reinforcement at a dosage rate of 1 Lb/C.Y., or as specified by manufacturer.

B. Contractor may elect to use manufactured repair material for repair areas that are less than 15 square feet. Manufactured repair material shall be from BASF, SIKA, or Engineer approved equal. All manufactured patching materials that the Contractor intends to use must be applied as recommended by the material manufacturer and submitted to the Engineer under the provisions of Section 01 33 00 of the Specifications for approval.

2.07 STEEL REINFORCEMENT

A. Refer to Section 03 20 00.

2.08 FIBER REINFORCEMENT

A. Refer to Section 03 20 00.

2.09 FINISHING MATERIALS

A. Concrete Repair Mortar: Trowel-grade, microsilica and ASTM 1059 latex-modified, cement-based, non-sag repair mortar.

PART 3 EXECUTION

3.01 INSPECTION

A. The Engineer will identify the areas of unsound concrete to be removed. The depth of removal shall be to sound concrete as determined by the Engineer. The perimeter of the removal shall be saw-cut to a depth of 2" or to top of the existing reinforcing steel, whichever is less. Removal outside the areas authorized by the Engineer will not be measured for payment. Existing concrete shall be removed by methods approved by the Engineer.

3.02 PREPARATION

A. Concrete removal work shall not begin until prior construction sequences indicated on the drawings are completed.

B. The Contractor shall furnish all equipment, material and labor required to temporarily support existing structure and pipes.

C. Any temporary support systems necessary to complete the work shall be in place and accepted by the Engineer prior to excavation and concrete removal work.

3.03 PROTECTION

A. The Contractor shall furnish all equipment, material and labor required to protect concrete surfaces and reinforcement steel.

B. Concrete shall be removed in such a manner as to leave the remaining structure and all attached structures and equipment undamaged. Any damage to the remaining structure or attached structures or equipment shall be repaired by the Contractor as directed by the Engineer at the Contractor's expense.

3.04 REMOVAL

A. The Contractor shall furnish all equipment and labor required to remove the concrete and reinforcement.

B. Existing concrete shall be carefully removed to the limits indicated on the drawings unless otherwise directed by the Engineer. Prior to removal, a saw cut shall be made along the limits of removal.

C. Where existing reinforcement bars are to extend from the remaining portions of the existing structure into new construction, care shall be exercised to prevent cutting, stretching, or otherwise damaging any existing reinforcement. The concrete shall be removed so as to leave the projecting bars clean and undamaged. Reinforcing bars damaged by the Contractor's operations shall be supplemented by new bars spliced or doweled in place as directed by the Engineer. Such supplemental reinforcing bars shall be furnished and installed by the Contractor at the Contractor's expense.

D. Where existing reinforcement bars are not to extend into new work, the bars shall be cut flush with the cut concrete surface. The ends of the bars shall then be flame-cut back 1/2 inch below the concrete surface.

3.05 REPAIR AND PATCHING

A. After removal of all unsound concrete, the remaining surfaces shall be blown free of all dust and loose particles by means of compressed air. Provisions shall be made to prevent a film of oil being deposited from the compressor to the concrete surfaces.

B. After the surfaces have been blown clean, each surface of the area shall be inspected to assure it is completely solid and that no unbounded particles remain trapped by or adhered to the reinforcing steel.

C. Areas along partially exposed reinforcement bars and beneath fully exposed reinforcement bars should be given special attention during the final cleaning operation.

D. Apply chemical bonding agent meeting the requirements of ASTM C 881.

E. New concrete shall be placed in accordance with ACI 301. Repair areas shall be formed to match the profile of the existing concrete, including any bevels, chamfers, expansion joints, etc. that were present prior to removal of concrete. For repair areas where a prepackaged/bag mix patching material will be used, install per manufacturer's written recommendations and guidelines.

F. New concrete / concrete patching materials shall be cured in accordance with Section 03 39 00.

3.06 FINISH

A. The Contractor shall furnish all equipment, material and labor required to finish concrete surfaces.

B. All newly exposed concrete surfaces, which are to receive new concrete or finish, shall be blast-cleaned.

C. Where concrete surfaces are not to receive new concrete, limits of concrete removal shall extend 1/2 inch beyond final dimensions. Surfaces shall then be built up with 1/2 inch concrete repair mortar to final dimensions.

D. Apply finish to concrete surfaces in accordance with material manufacturer's preparation and application recommendations.

3.07 DISPOSAL

A. The Contractor shall furnish all equipment and labor required to dispose of the removed concrete and reinforcement.

B. All concrete and non-salvaged reinforcement bars removed by the Contractor shall be disposed of off-site by the Contractor at the Contractor's expense in accordance with the Project Specifications.

C. Dispose of wastewater employed in cutting, washing, and rinsing of concrete surfaces in a manner such that the wastewater does not stain, discolor, or affect exposed surfaces of the structures, or damage the environment of the project area.

END OF SECTION 03 05 00

PART 1 GENERAL

1.01 SECTION INCLUDES

A. This specification covers the materials for, and manufacture of precast reinforced concrete units produced in accordance with the plans and these specifications.

1.02 REFERENCES - Where applicable, the latest editions of the following standards shall be considered a part of these specifications. In case of conflict, these specifications shall take precedence over the listed standard.

A. American Association of State Highway and Transportation Officials (AASHTO)
   1. “Standard Specification for Highway Bridges”
   2. “Guide Specifications for Structural Design of Sound Barriers”

B. ACI 304 – Guide for Measuring, Mixing, Transporting and Placing Concrete

C. ACI 318 - Building Code Requirements for Reinforced Concrete

D. ASTM C478 - Specification for Precast Reinforced Concrete Manholes Sections

E. ASTM C825 - Standard Specification for Precast Concrete Barriers

F. ASTM C857 - Standard Practice for Minimum Structural Design Loading for Underground Precast Concrete Utility Structures

G. ASTM C858 - Standard Specification for Underground Precast Concrete Utility Structures”

H. ASTM C890 - Standard Practice for Minimum Structural Design Loading for Monolithic or Sectional Precast Concrete Water and Wastewater Structures

I. ASTM C913 - Standard Specification for Precast Concrete Water and Wastewater Structures

J. ASTM C915 - Standard Specification for Precast Reinforced Concrete Crib Wall Members

K. ASTM C923 – Standard Specification for Resilient Connectors Between Reinforced Concrete Manhole Structures, Pipes and Laterals

L. ASTM C936 - Standard Specification for Solid Concrete Interlocking Paving Units

M. ASTM C990 - Standard Specification for Joints for Concrete Pipe, Manholes and Precast Box Sections Using Preformed Flexible Joint Sealants

N. ASTM C1227 - Standard Specification for Precast Concrete Septic Tanks

O. ASTM 1433 - Standard Specification for Precast Reinforced Concrete Box Sections for Culverts, Storm Drains, and Sewers

P. ASTM C1478 - Standard Specification for Storm Drain Resilient Connectors Between Reinforced Concrete Storm Sewer Structures, Pipes and Laterals

Q. AWS D1.1 - Structural Welding Code - Structural Steel

R. AWS D1.4 - Structural Welding Code - Reinforcing Steel

S. CRSI Manual of Standard Practice

1.03 FRANCHISE PRODUCTS

A. Products manufactured under franchise arrangements shall conform to all the requirements specified by the franchiser. Items not included in the franchise specification but included in this specification shall conform to the requirements in this specification.

1.04 SUBMITTALS

A. Product Data
   1. For standard precast concrete units, the precast concrete producer will supply cut sheets showing conformance to project drawings and requirements and to applicable ASTM specifications listed in this specification. The Precast concrete producer shall certify that such products will meet the ASTM specifications.
   2. For proprietary precast concrete units, the precast concrete producer may supply standard plans or informative literature. Supporting calculations and design details shall be available upon request. The Precast concrete producer shall warrant that such products will perform the intended task.

B. Shop Drawings
   1. The plans for custom-made precast concrete units shall be shop drawings furnished by the precast concrete producer for approval by the Owner or his agent (specifier). These drawings shall show complete design, installation, and construction information in such detail as to enable the Owner to determine the adequacy of the proposed units for the intended purpose. Details of steel reinforcement size and placement as well as supporting design calculations, if appropriate, shall be included. The drawings shall include a schedule, which will list the size and type of precast concrete units at each location where they are to be used. The precast concrete units shall be produced in accordance with the approved drawings.

1.05. QUALITY ASSURANCE

A. Precast concrete producer shall demonstrate adherence to the standards set forth in the National Precast Concrete Association Quality Control Manual. Precast concrete producer shall meet requirements written in subparagraph 1 or 2.

1. NPCA Certification - The precast concrete producer shall be certified by the National Precast Concrete Association's Plant Certification Program prior to and during production of the products for this project.
2. Qualifications, Testing and Inspection
   a. The Precast concrete producer shall have been in the business of producing precast concrete products similar to those specified for a minimum of 5 years. The precast concrete producer shall maintain a permanent quality control department or retain an independent testing
   agency on a continuing basis. The agency shall issue a report, certified by a licensed engineer, detailing the ability of the precast concrete producer to produce quality products consistent with industry standards.
   b. The Precast concrete producer shall show that the following tests are performed in accordance with the ASTM standards indicated. Tests shall be performed for each 150 cu. yd. of concrete placed, but not less frequently than once per week.
      i. Slump: C143
      ii. Compressive Strength: C31, C192, C39
      iii. Air Content (when air-entrained concrete is being used): C231 or C173
      iv. Unit Weight: C138

   c. The Precast concrete producer shall provide documentation demonstrating compliance with this subparagraph.
   d. The Owner may place an inspector in the plant when the products covered by this specification are being manufactured.

1.06 DELIVERY, STORAGE AND HANDLING

A. Handling
1. Products shall be stored, handled shipped and unloaded in a manner to minimize damage. Lifting holes or inserts shall be consistent with industry standards. Lifting shall be accomplished with methods or devices intended for this purpose.

B. Acceptance at Site
1. The Owner's representative shall make final inspection and acceptance of the precast concrete products upon arrival at the jobsite.

PART 2 PRODUCTS

2.01 MANUFACTURERS

A. The precast concrete manufacturer must meet the guidelines written in article 1.05 paragraph A.

2.02 MANUFACTURED PRECAST UNITS

A. Precast Concrete: Provide all units shown in Contract Documents and as needed for a complete and proper installation

B. Design Criteria - Design units in accordance with:
1. ACI 304 & 318.building code.
2. CRSI Manual of Standard Practice.
3. Applicable ASTM Standard(s).

C. Finishes
1. Formed non-architectural surfaces: Surfaces cast against approved forms using industry practice in cleaning forms, designing concrete mixes, placing and curing concrete. Normal color variations, form joint marks, small surface holes caused by air bubbles, and minor chips and spalls will be tolerated but no major imperfections, honeycombs or other defects will be permitted.
2. Unformed surfaces: Surfaces finished with a vibrating screed, or by hand with a float. Normal color variations, minor indentations, minor chips and spalls will be tolerated but no major imperfections, honeycombs, or other defects shall be permitted.
3. Special finishes:
   a. Troweled, broom or other finishes shall be according to the requirements of project documents and performed per industry standards or supplier specifications.
   b. Precast concrete producers shall submit finishes for approval when required by the project documents. The sample finishes shall be approved prior to the start of production.

D. Patching and Repairs
1. No repair is required to formed surfaces that are relatively free of air voids and honeycombed areas unless the surfaces are required by the design to be finished.
2. Repairing Minor Defects - Defects that will not impair the functional use or expected life of a manufactured precast concrete product may be repaired by any method that does not impair the product.
3. Repairing Honeycombed Areas - When honeycombed areas are to be repaired, all loose material shall be removed, and the areas cut back into essentially horizontal or vertical planes to a depth at which coarse aggregate particles break under chipping rather than being dislodged. Proprietary repair materials shall be used in accordance with the manufacturer’s instructions. If a proprietary repair material is not used, the area shall be saturated with water and, immediately prior to repair, the area should be damp, but free of excess water. A cement-sand grout

or an approved bonding agent shall be applied to the chipped surfaces, followed immediately by consolidating an appropriate repair material into the cavity.

4. Repairing Major Defects - Defects in precast concrete products which impair the functional use or the expected life of products shall be evaluated by qualified personnel to determine if repairs are feasible and, if so, to establish the repair procedure.

2.03 MATERIALS

A. Concrete - Concrete shall be a uniform mix of quality materials listed in Article 2.4. Mix proportions shall be determined by following the standards in ACI 318 Chapter 5. Recommendations for selecting proportions for concrete are given in detail in Standard Practice for Selecting Proportions for Normal, Heavyweight, and Mass Concrete (ACI 211.1). Recommendations for lightweight concrete are given in Standard Practice for Selecting proportions for Structural Lightweight Concrete (ACI 211.2).

1. Water-Cement Ratio
   a. Concrete that will be exposed to freezing and thawing shall contain entrained air and shall have water-cement ratios of 0.45 or less. Concrete which will not be exposed to freezing, but which is required to be watertight, shall have a water-cement ratio of 0.48 or less if the concrete is exposed to fresh water, or 0.45 or less if exposed to brackish water or sea water. For corrosion protection, reinforced concrete exposed to deicer salts, brackish water or seawater shall have a water-cement ratio of 0.40 or less.

2. Air Content
   a. The air content of concrete that will be exposed to freezing conditions shall be within the limits given in Table 1.

Table 1 Total Air Content For Frost-Resistant

Concrete Nominal Maximum Aggregate Size (Inches)	Air Content, %	
	Severe Exposure	Moderate Exposure
3/8	6.0 to 9.0	4.5 to 7.5
1/2	5.5 to 8.5	4.0 to 7.0
3/4	4.5 to 7.5	3.5 to 6.5
1	4.5 to 7.5	3.0 to 6.0
1-1/2	4.5 to 7.0	3.0 to 6.0

*For specified compressive strengths greater than 5000 psi, air content may be reduced 1%.

3. Compressive Strength
   a. All concrete shall develop a minimum compressive strength of 4,000 psi in 28 days unless other strengths are designated on the drawings.

B. Portland Cement: ASTM C150, Type I, II, III or V.

C. Aggregates: ASTM C33 or C330.

D. Water: Potable or free of deleterious substances in amounts harmful to concrete or embedded metals.

E. Admixtures:
   1. Air-entraining: ASTM C260
   2. Water reducing, retarding, accelerating, high range water reducing: ASTM C494
   3. Pozzolans, fly ash and other mineral admixtures: ASTM C618
   4. Ground granulated blast furnace slag: ASTM C989
   5. Pigments: Non-fading and lime-resistant

2.04 REINFORCEMENT AND CONNECTION MATERIALS

A. Provide all reinforcement, accessory and connection materials required. Concrete reinforcement shall be steel bars or welded wire fabric, or a combination thereof.

B. Reinforcing Bars:
   1. Deformed Billet-steel: ASTM A615
   2. Deformed Rail-steel: ASTM A616
   3. Deformed Axle-steel: ASTM A617
   4. Deformed Low-alloy steel: ASTM A706

C. Reinforcing Wire:
   1. Plain Wire: ASTM A82
   2. Deformed Wire: ASTM A496

D. Welded Wire Fabric:
   1. Plain Wire: ASTM A185
   2. Deformed Wire: ASTM A497

E. Epoxy Coated Reinforcement:
   1. Reinforcing Bars: ASTM A775
   2. Wires and Fabric: ASTM A884

F. Galvanized Reinforcement:
   1. Reinforcing Bars: ASTM A767

G. Inserts and Embedded Metal - All items embedded in concrete shall be of the type required for the intended task, and meet the following standards:
   1. Structural steel plates, angles, etc.: ASTM A36
   2. Proprietary items: In accordance with manufacturers published literature
   3. Welded studs: AWS D1.1

4. Finishes (as required):
    a. Shop primer: Manufacturers' standards
    b. Hot-dipped galvanized: ASTM A152
    c. Zinc-rich coating: MIL-P-2135 self-curing, one component, sacrificial
    d. Cadmium coating: Manufacturers' recommendations

H. Joint Sealant and Joint Gaskets:
1. Joints for Circular Concrete Sewer and Culvert Pipe, Using Rubber Gaskets: ASTM C443.
2. External Sealing Bands for Noncircular Sewer, Storm Drain, and Culvert Pipe: ASTM C877.
3. Joints for Concrete Pipe, Manholes, and Manufactured Box Sections Using Preformed Flexible Joint Sealants: ASTM C990
4. Specification for Elastomeric Joint Sealants: ASTM C920

I. Pipe Entry Connectors:

1. Resilient Connectors Between Reinforced Concrete Manhole Structures, Pipes and Laterals: ASTM C923.

J. Grout:
1. Cement grout: Portland cement with enough water for the required strength and sand for proper consistency. May contain mineral or chemical admixtures, if approved by Owner's representative.
2. Non-shrink grout: Premixed, packaged expansive and non-expansive shrink- resistant grout.

2.05 FABRICATION

A. Forms for manufacturing precast concrete products shall be of the type and design consistent with industry standards. They should be capable of consistently providing uniform products and dimensions. Forms shall be constructed so that the forces and vibrations to which the forms will be subjected can cause no product damage.
1. Forms shall be cleaned of concrete build-up after each use.
2. Form release agents shall not be allowed to build up on the form casting surfaces.

B. Reinforcement
1. Cages of reinforcement shall be fabricated either by tying the bars, wires or welded wire fabric into rigid assemblies or by welding where permissible in accordance with AWS D1.4. Reinforcing shall be positioned as specified by the design and so that the concrete cover conforms to requirements. The tolerance on concrete cover shall be one-third of that specified but not more than 1/2 in. Concrete cover shall not be less than 1/2 in. Positive means shall be taken to assure that the reinforcement does not move significantly during the casting operations.

C. Embedded Items

1. Embedded items shall be positioned at locations specified in the design documents. Inserts, plates, weldments, lifting devices and other items to be imbedded in precast concrete products shall be held rigidly in place so that they do not move significantly during casting operations.

D. Placing Concrete

1. Concrete shall be deposited into forms as near to its final location as practical. The free fall of the concrete shall be kept to a minimum. Concrete shall be consolidated in such a manner that segregation of the concrete is minimized and honeycombed areas are kept to a minimum. Vibrators used to consolidate concrete shall have frequencies and amplitudes sufficient to produce well consolidated concrete.
2. Cold Weather Requirements - Recommendations for cold weather concreting are given in detail in Cold Weather Concreting reported by ACI Committee 306.
   a. Adequate equipment shall be provided for heating concrete materials and protecting concrete during freezing or near-freezing weather.
   b. All concrete materials and all reinforcement, forms, fillers, and ground with which concrete is to come in contact shall be free from frost.
   c. Frozen materials or materials containing ice shall not be used.
   d. In cold weather the temperature of concrete at the time of placing shall not be below 45□ F. Concrete that freezes before its compressive strength reaches 500 psi shall be discarded.
3. Hot Weather Requirements - Recommendations for hot weather concreting are given in detail in Hot Weather Concreting reported by ACI Committee 305.
   a. During hot weather, proper attention shall be given to ingredients, production methods, handling, placing, protection, and curing to prevent excessive concrete temperatures or water evaporation that could impair required strength or serviceability of the member or structure. The temperature of concrete at the time of placing shall not exceed 90□ F.

E. Curing

1. Curing by Moisture Retention - Moisture shall be prevented from evaporating from exposed surfaces until adequate strength for stripping (Article 2.6, paragraph F) is reached by one of the following methods:
   a. Cover with polyethylene sheets a minimum of 6 mils thick.
   b. Cover with burlap or other absorptive material and keep continually moist.
   c. Use of a membrane-curing compound applied at a rate not to exceed 200 sq. ft. per gallon, or per manufacturers' recommendations.
2. Surfaces that will be exposed to weather during service shall be cured as above a minimum of 3 days. Forms shall be considered effective in preventing evaporation from the contact surfaces. If air temperature is below 50°F the curing period shall be extended.
3. Curing with Heat and Moisture

a. Concrete shall not be subjected to steam or hot air until after the concrete has attained its initial set. Steam, if used, shall be applied within a suitable enclosure, which permits free circulation of the steam. If hot air is used for curing, precautions shall be taken to prevent moisture loss from the concrete. The temperature of the concrete shall not be permitted to exceed 160°F. These requirements do not apply to products cured with steam under pressure in an autoclave.

F. Stripping Products from Forms

1. Products shall not be removed from the forms until the concrete reaches the compressive strength for stripping required by the design. If no such requirement exists, products may be removed from the forms after the final set of concrete provided that stripping damage is minimal.

G. Shipping Products

1. Products shall not be shipped until they are at least 5 days old, unless it can be shown that the concrete strength has reached at least 75% of the specified 28-day strength, or that damage will not be caused which will impair the performance of the product.

2.06 SOURCE QUALITY CONTROL

A. Fabricate units in accordance with ACI 318 and the National Precast Concrete Association's Quality Control Manual for Precast Plants.

PART 3 EXECUTION

3.01 INSTALLATION

A. Site Access
   1. General contractor shall be responsible for providing adequate access to the site to facilitate hauling, storage and proper handling of the precast concrete products.

B. Installation
   1. Precast concrete products shall be installed to the lines and grades shown in the contract documents or otherwise specified.
   2. Products shall be lifted by suitable lifting devices at points provided by the precast concrete producer.
   3. Products shall be installed per the precast concrete producer's recommendation.

C. Water tightness
   1. Where water tightness is a necessary performance characteristic of the precast concrete product's end use, watertight joints, connectors and inserts should be used to ensure the integrity of the entire system.

3.02 FIELD QUALITY CONTROL

A. Site tests - when testing is required for an underground product, one of the following methods need to be followed:
   1. Vacuum testing prior to backfill according to ASTM C1244.
   2. Water testing according to contract documents and precast concrete producer's recommendations.

END OF SPECIFICATION 03 05 60

PART 1 GENERAL

1.01 RELATED DOCUMENTS

A. Drawings and general provisions of the Contract, including General and Supplementary Conditions and Division 01 Specification Sections, apply to this Section.

1.02 SUMMARY

A. Section includes concrete formwork, shoring, bracing, and anchoring for cast-in-place concrete as shown on the drawings and as herein specified for the following:
   1. Footings
   2. Foundation walls
   3. Slabs-on-grade
   4. Elevated Slabs
   5. Concrete toppings
   6. Concrete sidewalks
   7. Miscellaneous items requiring forms

B. Related Sections:
   1. Section 01 33 00 – Submittal Procedures
   2. Section 03 15 00 – Concrete Accessories
   3. Section 03 20 00 – Concrete Reinforcing
   4. Section 03 31 00 – Structural Concrete
   5. Division 5 – Metals

C. References:
   1. ACI 117-10 – Specification for Tolerances for Concrete Construction and Materials.
   2. ACI 301-16 – Specifications for Structural Concrete.
   3. AISC 303-10 – Code of Standard Practice for Steel Buildings and Bridges.
   4. ASTM D4397 – Standard Specification for Polyethylene Sheeting for Construction, Industrial, and Agricultural Applications.
   5. ASTM E1643 – Standard Practice for Selection, Design, Installation, and Inspection of Water Vapor Retarders Used in Contact with Earth or Granular Fill Under Concrete Slabs.

1.03 DEFINITIONS

A. Form-Facing Material: Temporary structure or mold for the support of concrete while the concrete is setting and gaining sufficient strength to be self-supporting.

B. Formwork: The total system of support of freshly placed concrete, including the mold or sheathing that contacts the concrete, as well as supporting members, hardware, and necessary bracing.

1.04 SUBMITTALS

A. Submit under the provisions of Division 01 - Section 01 33 00 – Submittal Procedures.

B. Product Data: For each type of product.

C. Formwork shop drawings: Prepared by or under the supervision of a licensed professional engineer detailing fabrication, assembly, and support of formwork.

1. Shoring and Reshoring: Indicate proposed schedule and sequence of stripping formwork, shoring removal, and reshoring installation and removal.

D. Construction Joint Layout: Indicate proposed construction joints required to construct the structures in accordance with ACI 301 if different than that shown on plans.

1. Location of construction joints is subject to approval of the Engineer.

E. Qualification Data: For installer and manufacturer of forms.

1.05 QUALITY ASSURANCE

A. Construct and erect concrete formwork in accordance with ACI 301.

1.06 DELIVERY, STORAGE AND HANDLING

A. Deliver form materials in manufacturer's packaging with installation instructions.

B. Store off ground in ventilated and protected area to prevent deterioration from moisture or damage.

1.07 SYSTEM DESCRIPTION

A. Design and construct formwork, shoring and bracing such that resultant concrete conforms to shapes, lines, and dimensions shown in the contract documents.

PART 2 PRODUCTS

2.01 FORM-FACING MATERIALS

A. Smooth-Formed Finished Concrete:
1. Provide continuous, true, and smooth concrete surfaces.
2. Furnish in largest practicable sizes to minimize number of joints in formwork.

3. Acceptable Materials: As required to comply with Surface Finish designations specified in Section 03 31 00, and as follows:
    a. Plywood, metal, or other approved panel materials.
    b. Exterior-grade plywood panels, suitable for concrete forms, complying with DOC PS 1, and as follows:
        i. Structural 1, B-B or better; mill oiled and edge sealed.

B. Rough-Formed Finished Concrete: Plywood, lumber, metal, or another approved material. Provide lumber dressed on at least two edges and one side for tight fit.

C. Forms for Cylindrical Columns, Pedestals, and Supports: Metal, glass-fiber-reinforced plastic, paper, or fiber tubes that will produce surfaces with gradual or abrupt irregularities not exceeding specified formwork surface class.
    1. Provide units with sufficient wall thickness to resist plastic concrete loads without detrimental deformation.

D. Pan-Type Forms: Glass-fiber-reinforced plastic or formed steel, stiffened to resist plastic concrete loads without detrimental deformation.

2.02 RELATED MATERIALS

A. Chamfer Strips: Wood, metal, PVC, or rubber strips, 3/4 by 3/4 inch, minimum.

B. Rustication Strips: Wood, metal, PVC, or rubber strips, kerfed for ease of form removal.

C. Form-Release Agent: Commercially formulated form-release agent that will not bond with, stain, or adversely affect concrete surfaces and will not impair subsequent treatments of concrete surfaces.
    1. Contractor shall verify compatibility of form release agent selected with coating specified here-in.
    2. Formulate form-release agent with rust inhibitor for steel form-facing materials.
    3. Products: Subject to compliance with requirements, provide one of the products specified.
        a. Dayton Superior Conctruction Chemicals - Magic Kote
        b. Lambert Corporation – Form Release Gold
        c. Euclid Chemical Co. – Formshield Pure
        d. Or Engineer approved equal.
    4. Form Ties: Factory-fabricated, removable or snap-off metal or glass-fiber-reinforced plastic form ties designed to resist lateral pressure of fresh concrete on forms and to prevent spalling of concrete on removal.
        a. Furnish units that will leave no corrodible metal closer than 1 inch to the plane of exposed concrete surface.
        b. Furnish ties that, when removed, will leave holes no larger than 1 inch in diameter in concrete surface.
        c. Ties shall be removed after forms are removed and holes shall then be filled with mortar that matches adjacent surface.
        d. Provide stainless steel form ties for exterior surfaces exposed to view.

e. Furnish ties with integral water-barrier plates to walls indicated to receive dampproofing or waterproofing.

PART 3 EXECUTION

3.01 INSPECTION

A. Verify lines, levels, and measurements before proceeding with formwork.

3.02 FORMWORK

A. Design, erect, shore, brace, and maintain formwork, according to ACI 301, to support vertical, lateral, static and dynamic loads, and construction loads that might be applied, until structure can support such loads. Load supporting formwork shall remain in place until concrete has reached 75% of specified minimum 28-day compressive strength.

B. Construct formwork so concrete members and structures are of size, shape, alignment, elevation, and position indicated, within tolerance limits of ACI 117.

C. Concrete surfaces exposed to view shall conform to Surface Finish 3.0. All other as-cast finishes shall conform to Surface Finish-2.0 as specified in ACI 301.

D. Construct forms tight enough to prevent loss of concrete mortar.
1. Minimize joints.
2. Exposed Concrete: Symmetrically align joints in forms.

E. Fabricate forms for easy removal without hammering or prying against concrete surfaces.
1. Provide crush or wrecking plates where stripping may damage cast concrete surfaces.
2. Provide top forms for inclined surfaces steeper than 1.5 horizontal to 1 vertical.
3. Install keyway, reglet, recesses, formwork, and other accessories, for easy removal.

F. Do not use rust-stained steel form-facing material.

G. Set edge forms, bulkheads, and intermediate screed strips for slabs to achieve required elevations and slopes in finished concrete surfaces.
1. Provide and secure units to support screed strips.
2. Use strike-off templates or compacting-type screeds.

H. Chamfer exterior corners and edges of permanently exposed concrete as indicated on drawings.

I. Form openings, chases, offsets, sinkages, keyways, reglets, blocking, screeds, and bulkheads required in the Work.
1. Determine sizes and locations from trades providing such items.
2. Obtain written approval of Engineer prior to forming openings not indicated on Drawings.

J. Clean forms and adjacent surfaces to receive concrete. Remove chips, wood, sawdust, dirt, and other debris just before placing concrete.

K. Retighten forms and bracing before placing concrete, as required, to prevent mortar leaks and maintain proper alignment.

L. Coat contact surfaces of forms with form-release agent, according to manufacturer's written instructions, before placing reinforcement, anchoring devices and embedded items. Do not apply form release agent where concrete surfaces are scheduled to receive special finishes, which may be affected by agent. Soak contact surfaces of untreated forms with clean water. Keep surfaces wet prior to placing concrete.

M. Earth forms, except for footings, not permitted.

N. Provide temporary ports in formwork to facilitate cleaning and inspection.
   1. Locate openings at bottom of forms to allow flushing water to drain.
   2. Close ports with tight fitting panels, flush with inside face of forms, neatly fitted so that joints will not be apparent in exposed concrete surfaces.

3.03 INSERTS, EMBEDDED PARTS AND OPENINGS

A. Provide formed openings where required for work embedded in or passing through concrete.

B. Coordinate work of other sections in forming and setting openings, slots, recesses, chases, sleeves, bolts, anchors and other inserts.

C. Install accessories in accordance with manufacturer's instructions, level and plumb. Ensure items are not disturbed during concrete placement.

D. Place and secure anchorage devices and other embedded items required for adjoining work that is attached to or supported by cast-in-place concrete.
   1. Use setting drawings, templates, diagrams, instructions, and directions furnished with items to be embedded.
   2. Install anchor rods, accurately located, to elevations required and complying with tolerances of AISC 303.
   3. Install dovetail anchor slots in concrete structures, as indicated on Drawings.
   4. Clean embedded items immediately prior to concrete placement.

3.04 REMOVING AND REUSING FORMS

A. General: Formwork for sides of beams, walls, columns, and similar parts of the Work that does not support weight of concrete may be removed after cumulatively curing at not less than 50 deg F for 24 hours after placing concrete. Concrete has to be hard enough to not be damaged by form-removal operations and curing and protection operations need to be maintained.
   1. Leave formwork for beam soffits, joists, slabs, and other structural elements that supports weight of concrete in place until concrete has achieved at least 75 percent of its 28-day design compressive strength.
   2. Remove forms only if shores have been arranged to permit removal of forms without loosening or disturbing shores.

B. Clean and repair surfaces of forms to be reused in the Work.
   1. Split, frayed, delaminated, or otherwise damaged form-facing material will not be acceptable for exposed surfaces.
   2. Apply new form-release agent.

C. When forms are reused, clean surfaces, remove fins and laitance, and tighten to close joints.
   1. Align and secure joints to avoid offsets.
   2. Do not use patched forms for exposed concrete surfaces unless approved by Engineer.

D. During cold weather, remove ice and snow from forms. Do not use deicing salts. Do not use water to clean out completed forms, unless formwork and construction proceed within heated enclosure. Use compressed air to remove foreign matter.

3.05 SHORES AND RESHORES

A. Comply with ACI 318 and ACI 301 for design, installation, and removal of shoring and reshoring.
   1. Do not remove shoring or reshoring until measurement of slab tolerances is complete.

B. In multistory construction, extend shoring or reshoring over a sufficient number of stories to distribute loads in such a manner that no floor or member will be excessively loaded or will induce tensile stress in concrete members without sufficient steel reinforcement.

C. Plan sequence of removal of shores and reshore to avoid damage to concrete. Locate and provide adequate reshoring to support construction without excessive stress or deflection.

END OF SECTION 03 11 00

PART 1 GENERAL

1.01 RELATED DOCUMENTS

A. Drawings and general provisions of the Contract, including General and Supplementary Conditions and Division 01 Specification Sections, apply to this Section.

1.02 SUMMARY

A. Section includes concrete accessories as shown on the drawings and as herein specified, for the following:
   1. Footings
   2. Foundation walls
   3. Slabs-on-grade
   4. Elevated slabs
   5. Concrete toppings
   6. Concrete sidewalks
   7. Miscellaneous concrete construction

B. Related Sections:
   1. Section 01 33 00 – Submittal Procedures
   2. Section 03 11 00 – Concrete Forming
   3. Section 03 20 00 – Concrete Reinforcement
   4. Section 03 31 00 – Structural Concrete
   5. Division 5 – Metals
   6. Section 13 21 10 Composite Elevated Water Storage Tank

C. References:
   1. ACI 117-10 – Specification for Tolerances for Concrete Construction and Materials.
   2. ACI 301-16 – Specifications for Structural Concrete.
   3. AISC 303-10 – Code of Standard Practice for Steel Buildings and Bridges
   4. COE CRD-C 572 – Specification for Polyvinyl Chloride Waterstop.

1.03 DEFINITIONS

A. (RESERVED)

1.04 SUBMITTALS

A. Submit under the provisions of Division 01 - Section 01 33 00 – Submittal Procedures.

B. Product Data: For each type of product.

C. Samples: For all waterstops to be used.

D. Construction Joint Layout: Refer to Section 03 11 00.

E. Shop Drawings: Show fabrication of structural-steel components to be embedded in concrete.
   1. Include embedment drawings.
   2. Include type, size, and length of anchor rods.

1.05 DELIVERY, STORAGE AND HANDLING

A. Deliver materials in manufacturer's packaging with installation instructions.

B. Waterstops: Store waterstops under cover to protect from moisture, sunlight, dirt, oil, and other contaminants.

C. Store anchors and packaged materials to permit easy access for inspection and identification and protect from corrosion and deterioration.

1.06 COORDINATION

A. Coordinate installation of anchorage items to be embedded in or attached to other construction without delaying the Work. Provide setting diagrams, sheet metal templates, instructions, and directions for installation.

PART 2 PRODUCTS

2.01 JOINTS

A. Expansion- and Isolation-Joint-Filler Strips: ASTM D 1751, asphalt-saturated cellulosic fiber, 1/2 inch thick (unless shown otherwise).

B. Semirigid Joint Filler: Two-component, semirigid, 100 percent solids, epoxy resin with a Type A shore durometer hardness of 80 per ASTM D 2240.

2.02 ANCHORS

A. Unheaded Anchor Rods: ASTM F 1554, Grade 55.
   1. Configuration: As indicated on drawings.
   2. Nuts: ASTM A 563 hex carbon steel.
   3. Plate Washers: ASTM A 36 carbon steel.
   4. Washers: ASTM F 436, Type 1, hardened carbon steel.
   5. Finish: Hot-dip zinc coating, ASTM A 153, Class C, unless noted otherwise.

B. Headed Anchor Rods: ASTM F 1554, Grade 55 straight.
   1. Nuts: ASTM A 563 hex carbon steel.
   2. Plate Washers: ASTM A 36 carbon steel.
   3. Washers: ASTM F 436, Type 1, hardened carbon steel.
   4. Finish: Hot-dip zinc coating, ASTM A 153, Class C unless otherwise noted.

PART 3 EXECUTION

3.01 JOINTS

A. General: Construct joints true to line with faces perpendicular to surface plane of concrete.

B. Construction Joints: Install so strength and appearance of concrete are not impaired, at locations indicated or as approved by Engineer.
   1. Place joints perpendicular to main reinforcement. Continue reinforcement across construction joints unless otherwise indicated. Do not continue reinforcement through sides of strip placements of floors and slabs.
   2. Form keyed joints as indicated. Embed keys at least 2 inches into concrete.
   3. Unless indicated differently on the Drawings, locate joints for beams, slabs, joists, and girders in the middle third of spans. Offset joints in girders a minimum distance of twice the beam width from a beam-girder intersection.
   4. Unless indicated differently on the Drawings, locate horizontal joints in walls and columns at underside of floors, slabs, beams, and girders and at the top of footings or floor slabs.
   5. Space vertical joints in walls such that the ratio of the dimensions of the pour does not exceed 2:1, or as indicated on the Drawings. Locate joints beside piers integral with walls, near corners, and in concealed locations where possible.

C. Contraction Joints in Slabs-on-Grade: Form weakened-plane contraction joints, sectioning concrete into areas with a ratio of plan dimensions not greater than 2:1, or as indicated on the Drawings. Construct contraction joints for a depth equal to at least one-fourth of concrete thickness as follows:
   1. Grooved Joints: Form contraction joints after initial floating by grooving and finishing each edge of joint to a radius of 1/8 inch. Repeat grooving of contraction joints after applying surface finishes. Eliminate groover tool marks on concrete surfaces.
   2. Sawed Joints: Form contraction joints with power saws equipped with shatterproof abrasive or diamond-rimmed blades. Cut 1/8-inch-wide joints into concrete when cutting action will not tear, abrade, or otherwise damage surface and before concrete develops random contraction cracks.

D. Isolation Joints in Slabs-on-Grade: After removing formwork, install joint-filler strips at slab junctions with vertical surfaces, such as column pedestals, foundation walls, grade beams, and other locations, as indicated.
   1. Extend joint-filler strips full width and depth of joint, terminating flush with finished concrete surface unless otherwise indicated.
   2. Terminate full-width joint-filler strips not less than 1/2 inch or more than 1 inch below finished concrete surface where joint sealants, specified in Division 07 Section "Joint Sealants," are indicated.
   3. Install joint-filler strips in lengths as long as practicable. Where more than one length is required, lace or clip sections together.

E. Doweled Joints: Install dowel bars and support assemblies at joints where indicated. Lubricate or asphalt coat one-half of dowel length to prevent concrete bonding to one side of joint.

3.02 ANCHORS AND OTHER EMBEDDED ACCESSORIES

A. Install accessories in accordance with manufacturer's instructions, level and plumb. Ensure items are not disturbed during concrete placement.

B. Place and secure anchorage devices and other embedded items required for adjoining work that is attached to or supported by cast-in-place concrete.
   1. Use setting drawings, templates, diagrams, instructions, and directions furnished with items to be embedded.
   2. Install anchor rods, accurately located, to elevations required and complying with tolerances of AISC 303.
   3. Clean embedded items immediately prior to concrete placement.

END OF SECTION 03 15 00

PART 1 GENERAL

1.01 RELATED DOCUMENTS

A. Drawings and general provisions of the Contract, including General and Supplementary Conditions and Division 01 Specification Sections, apply to this Section.

1.02 SUMMARY

A. Section includes reinforcing steel bars, welded wire fabric and accessories for cast-in-place concrete.

B. Related Sections
1. Section 01 33 00 – Submittal Procedures
2. Section 03 11 00 – Concrete Forming
3. Section 03 31 00 – Structural Concrete
4. Section 13 21 10 Composite Elevated Water Storage Tank

C. Reference to Standards
1. ACI 117-10 – Specifications for Tolerances for Concrete Construction and Materials.
2. ACI 301-16 – Specifications for Structural Concrete.
3. ACI SP-066 - Detailing Manual.
4. ANSI/ASTM A185 – Standard Specification for Steel Welded Wire Reinforcement, Plain, for Concrete.
5. ASTM A615 – Standard Specification for Deformed and Plain Carbon Steel Bars for Concrete Reinforcement.
6. ASTM A706 – Standard Specification for Deformed and Plain Low-Alloy Steel Bars for Concrete Reinforcement.
7. ASTM A775 – Standard Specification for Epoxy-Coated Steel Reinforcing Bars.
8. ASTM A884 – Standard Specification for Epoxy-Coated Steel Wire and Welded Wire Reinforcement.
9. ASTM A1064 – Standard Specification for Carbon-Steel Wire and Welded Wire Reinforcement, Plain and Deformed, for Concrete.
10. ASTM C1116 – Standard Specification for Fiber-Reinforced Concrete.
11. ASTM D3963 – Standard Specification for Fabrication and Jobsite Handling of Epoxy Coated Steel Reinforcing Bars.
12. AWS D1.4 – Structural Welding Code – Reinforcing Steel.
13. CRSI - Concrete Reinforcing Steel Institute - Manual of Standard Practice.

1.03 DEFINITIONS

A. (RESERVED)

1.04 SUBMITTALS

A. Submit under the provisions of Division 01 - Section 01 33 00 – Submittal Procedures.

B. Product Data: For the Following:
   1. Each type of steel reinforcement.
   2. Epoxy repair coating.
   3. Zinc repair material.
   4. Bar supports.
   5. Mechanical splice couplers.
   6. Structural thermal break insulated connection system.

C. Steel Reinforcement Shop Drawings:
   1. Placing drawings that detail fabrication, bending, and placement.
   2. Include bar sizes, lengths, material, grade, bar schedules, stirrup spacing, bent bar diagrams, bar arrangement, splices and laps, mechanical connections, tie spacing, hoop spacing, and supports for concrete reinforcement.

D. Construction Joint Layout: Indicate proposed construction joints required to build the structure.
   1. Location of construction joints is subject to approval of the Engineer.

E. Qualification Data: For installer and manufacturer of reinforcement.

F. Material Certificates: For each of the following, signed by manufacturers:
   1. Steel reinforcement and accessories.
   2. Fiber reinforcement.

G. Material Test Reports: For the following, from a qualified testing agency:
   1. Steel Reinforcement:
      a. For reinforcement to be welded, mill test analysis for chemical composition and carbon equivalent of the steel in accordance with ASTM A706.
   2. Mechanical splice couplers.

H. Welder’s Certificates: Submit under provisions Division 01 – General Requirements, Manufacturer’s Certificates, certifying welders employed on the Work, verifying AWS qualifications within the previous 12 months.

1.05 QUALITY ASSURANCE

A. Perform Work in accordance with CRSI Manual of Standard Practice, ACI 117, and ACI 301.

B. Welding Qualifications: Qualify procedures and personnel according to AWS D1.4, "Structural Welding Code - Reinforcing Steel."

C. Maintain one copy of each document on site.

1.06 DELIVERY, STORAGE, AND HANDLING

A. Steel Reinforcement: Deliver, store, and handle steel reinforcement to prevent bending and damage and to avoid damaging coatings on steel reinforcement.

1.07 COORDINATION

A. Coordinate work under provisions of Division 01 – General Requirements.

B. Coordinate with placement of formwork, formed openings and other Work.

PART 2 PRODUCTS

2.01 STEEL REINFORCEMENT

A. Recycled Content of Steel Products: Provide products with an average recycled content of steel products so postconsumer recycled content plus one-half of preconsumer recycled content is not less than 60 percent.

B. Reinforcing Bars: ASTM A 615, Grade 60, deformed.

C. Low-Alloy Steel Reinforcing Bars: ASTM A706, deformed.

D. Epoxy-Coated Reinforcing Bars:
   1. Steel Bars: ASTM A 615, Grade 60, deformed.
   2. Epoxy Coating: ASTM A 775 with less than 2 percent damaged coating in each 12-inch bar length.

E. Plain-Steel Welded Wire Reinforcement: ASTM A1064, plain, fabricated from as-drawn steel wire into flat sheets.

F. Epoxy-Coated Welded Wire Reinforcement: ASTM A 884, Class A coated, Type 1, plain steel.

2.02 REINFORCEMENT ACCESSORIES

A. Steel Tie Wire: ASTM A1064, annealed steel, Minimum 16 gage.

B. Joint Dowel Bars: ASTM A 615, Grade 60, plain-steel bars, cut true to length with ends square and free of burrs.

C. Epoxy-Coated Joint Dowel Bars: ASTM A 615, Grade 60, plain-steel bars, ASTM A 775 epoxy coated.

D. Epoxy Repair Coating: Liquid, two-part, epoxy repair coating; compatible with epoxy coating on reinforcement and complying with ASTM D 3963 and ASTM A775.

E. Bar Supports: Bolsters, chairs, spacers, and other devices for spacing, supporting, and fastening reinforcing bars and welded wire reinforcement in place.

1. Manufacture bar supports from steel wire, plastic, or precast concrete according to CRSI's "Manual of Standard Practice," of greater compressive strength than concrete and as follows:
   a. For concrete surfaces exposed to view where legs of wire bar supports contact forms, use CRSI Class 1 plastic-protected steel wire or CRSI Class 2 stainless-steel bar supports.
   b. For epoxy-coated reinforcement, use epoxy-coated or other dielectric-polymer-coated wire bar supports.

2.03 FABRICATION

A. Fabricate concrete reinforcing in accordance with ACI 117.

B. Locate reinforcing splices not indicated on drawings at point of minimum stress.

2.04 FIBER REINFORCEMENT

A. Synthetic Micro-Fiber: Monofilament or fibrillated polypropylene micro-fibers engineered and designed for use in concrete, complying with ASTM C 1116, Type III, 1/2 to 1-1/2 inches long.

1. Products: Subject to compliance with requirements, provide one of the products specified.
   a. Monofilament Micro-Fibers:
      i. Axim Italcementi Group, Inc.; Fibrasol II P.
      ii. Euclid Chemical Company (The), an RPM company; Fiberstrand 150.
      iii. FORTA Corporation; FORTA Econo-Mono.
      iv. Grace Construction Products, W. R. Grace & Co.; Grace MicroFiber.
      v. Metalcrete Industries; Polystrand 1000.
      vi. Nycon, Inc.; ProConM.
      vii. Propex Concrete Systems Corp.; Fibermesh 150.
      viii. Sika Corporation; Sika Fiber PPM.
      ix. Or Engineer approved equal.
   b. Fibrillated Micro-Fibers:
      i. Axim Italcementi Group, Inc.; Fibrasol F.
      ii. Euclid Chemical Company (The), an RPM company; Fiberstrand F.
      iii. FORTA Corporation; FORTA Econo-Net.
      iv. Grace Construction Products, W. R. Grace & Co.; Grace Fibers.
      v. Nycon, Inc.; ProConF.
      vi. Propex Concrete Systems Corp.; Fibermesh 300.
      vii. Sika Corporation; Sika Fiber PPF.
      viii. Or Engineer approved equal.

B. Synthetic Macro-Fiber: Polyolefin macro-fibers engineered and designed for use in concrete, complying with ASTM C 1116, Type III, 1 to 2-1/4 inches long.

1. Products: Subject to compliance with requirements, provide one of the products specified.
   a. 3M; Scotchcast Polyolefin Fibers 1" or 2".
   b. Euclid Chemical Company (The), an RPM company; Tuf-Strand SF.
   c. FORTA Corporation; FORTA FERRO.
   d. Grace Construction Products, W. R. Grace & Co.; Strux 90/40.
   e. Nycon, Inc.; XL.
   f. Propex Concrete Systems Corp.; Fibermesh 650.
   g. Sika Corporation; Sika Fiber MS10.
   h. Or Engineer approved equal.

PART 3 EXECUTION

3.01 PREPARATION

A. Protection of In-Place Conditions:

1. Do not cut or puncture vapor retarder.
2. Repair damage and reseal vapor retarder before placing concrete.

B. Clean reinforcement of loose rust and mill scale, earth, ice, and other foreign materials that reduce bond to concrete.

3.02 INSTALLATION OF STEEL REINFORCEMENT

A. General: Comply with CRSI's "Manual of Standard Practice" for placing reinforcement.

B. Accurately position, support, and secure reinforcement against displacement. Reinforcement shall be tied at a minimum of 50 percent of the bar intersections.

1. Locate and support reinforcement with bar supports to maintain minimum concrete cover.
2. Do not tack weld crossing reinforcing bars.

C. Preserve clearance between bars of not less than 1 inch, no less than one bar diameter, or not less than 1 1/3 times the size of large aggregate, whichever is greater.

D. Provide concrete coverage in accordance with Drawings.

E. Set wire ties with ends directed into concrete, not toward exposed concrete surfaces.

F. Install welded wire reinforcement in longest practicable lengths on bar supports spaced to minimize sagging. Lap edges and ends of adjoining sheets at least one mesh spacing. Offset laps of adjoining sheet widths to prevent continuous laps in either direction. Lace overlaps with wire.

G. Epoxy-Coated Reinforcement: Repair cut and damaged epoxy coatings with epoxy repair coating according to ASTM D 3963. Use epoxy-coated steel wire ties to fasten epoxy-coated steel reinforcement.

H. Accommodate placement of formed openings.

I. Wall reinforcement shall not be placed in the work until one side of the wall forms has been erected, aligned and braced. As the wall reinforcement is placed, it shall be secured to the wall form with the proper clearance between the steel and forms.

J. Slab reinforcement shall be supported by manufactured steel bolsters only. Concrete half-bricks may be permitted only in slab on grade or footing construction.

K. Where walls or other items are shown as built integrally with other sections, but are placed as separate pours, keys and dowels shall be provided. Dowels shall be same size and at same spacing as reinforcing, unless noted otherwise.

L. Provide 4 x 4 - W 4.0 x W 4.0 electrically welded wire fabric, ASTM A185 reinforcing in all concrete slabs on ground unless shown otherwise.

M. Provide corner bars of same size and spacing as main reinforcement at all intersections and corners, unless noted otherwise.

N. Where openings occur in walls or slabs, and unless otherwise noted on the plans, provide two (2) #5 bars at all sides and extending at least 2 feet beyond corners and two (2) #5 bars at least 4 feet long diagonally across each re-entrant corner.

O. The Contractor shall give 24 hour notice to the Engineer for inspection of the reinforcing prior to the placement of the concrete.

P. The reinforcing for the concrete placement shall be completed and inspected before ordering concrete.

3.03 INSTALLATION TOLERANCES

A. Comply with ACI 117.

3.04 FIELD QUALITY CONTROL

A. Field inspection will be performed under provisions of Division 01 – General Requirements.

B. Testing Agency: Engage a qualified testing and inspecting agency to perform tests and inspections and to submit reports.

C. Inspections:

1. Steel-reinforcement placement.
2. Steel-reinforcement mechanical splice couplers.
3. Steel-reinforcement welding.

END OF SECTION 03 20 00

PART 1 GENERAL

1.01 RELATED DOCUMENTS

A. Drawings and general provisions of the Contract, including General and Supplementary Conditions and Division 01 Specification Sections, apply to this Section.

1.02 SUMMARY

A. Section Includes:
1. All cast-in-place concrete including, but not limited to floors, slabs on grade, foundation walls, supported slabs, beams and columns.
2. Control, expansion and contraction joint devices associated with concrete work.
3. Equipment pads and manhole slabs.

B. Related Sections:
1. Section 01 33 00 – Submittal Procedures
2. Section 03 11 00 – Concrete Forming
3. Section 03 15 00 – Concrete Accessories
4. Section 03 20 00 – Concrete Reinforcing
5. Section 03 39 00 – Concrete Curing
6. Section 13 21 10 – Composite Elevated Water Storage Tank
7. Section 26 05 33 – Raceway and Boxes for Electrical Systems
8. Section 31 23 00 – Excavation and Fill

C. References:
1. ACI 117-10 – Specification for Tolerances for Concrete Construction and Materials
2. ACI 301-16 – Specifications for Structural Concrete
3. ACI 305.1-14 – Specification for Hot Weather Concreting
4. ACI 306.1-90 – Standard Specification for Cold Weather Concreting
5. ASTM C31 – Standard Practice for Making and Curing Concrete Test Specimens in the Field
6. ASTM C33 – Standard Specification for Concrete Aggregates
7. ASTM C39 – Standard Test Method for Compressive Strength of Cylindrical Concrete Specimens
8. ASTM C40 – Standard Test Method for Organic Impurities in Fine Aggregates for Concrete
9. ASTM C42 – Standard Test Method for Obtaining and Testing Drilled Cores and Sawed Beams of Concrete
10. ASTM C94 – Standard Specification for Ready-Mixed Concrete
11. ASTM C143 – Standard Test Method for Slump of Hydraulic-Cement Concrete
12. ASTM C150 – Standard Specification for Portland Cement

13. ASTM C157 – Standard Test Method for Length Change of Hardened Hydraulic-Cement Mortar and Concrete
14. ASTM C172 – Standard Practice of Sampling Freshly Mixed Concrete
15. ASTM C219 – Standard Terminology Relating to Hydraulic Cement
16. ASTM C231 – Standard Test Method for Air Content of Freshly Mixed Concrete by the Pressure Method
17. ASTM C260 – Standard Specification for Air-Entraining Admixtures for Concrete
18. ASTM C494 – Standard Specification for Chemical Admixtures for Concrete
19. ASTM C618 – Standard Specification for Coal Fly Ash and Raw or Calcined Natural Pozzolan for Use in Concrete
20. ASTM C845 – Standard Specification for Expansive Hydraulic Cement
21. ASTM C881 – Standard Specification for Epoxy-Resin Base Bonding Systems for Concrete
22. ASTM C989 – Standard Specification for Slag Cement for Use in Concrete and Mortars
23. ASTM C1017 – Standard Specification for Chemical Admixtures for Use in Producing Flowing Concrete
24. ASTM C1059 – Standard Specification for Latex Agents for Bonding Fresh to Hardened Concrete
25. ASTM C1064 – Standard Test Method for Temperature of Freshly Mixed Hydraulic-Cement Concrete
26. ASTM C1077 – Standard Practice for Agencies Testing Concrete and Concrete Aggregates for Use in Construction and Criteria for Testing Agency Evaluation
27. ASTM C1116 – Standard Specification for Fiber-Reinforced Concrete
28. ASTM C1240 – Standard Specification for Silica Fume Used in Cementitious Mixtures
29. ASTM D1751 – Standard Specification for Preformed Expansion Joint Filler for Concrete Paving and Structural Construction (Nonextruding and Resilient Bituminous Types)
30. ASTM D2240 – Standard Test Method for Rubber Property – Durometer Hardness
31. ASTM E329 – Standard Specification for Agencies Engaged in Construction Inspection, Testing, or Special Inspection
32. ASTM E1155 – Standard Test Method for Determining FF Floor Flatness and FL Floor Levelness Numbers

1.03 DEFINITIONS

A. Cementitious Materials: Portland cement alone or in combination with one or more of the following: blended hydraulic cement, fly ash, slag cement, other pozzolans, and silica fume; materials subject to compliance with requirements.

B. W/C Ratio: The ratio by weight of water to cementitious materials.

1.04 PREINSTALLATION MEETINGS

A. Pre-placement Conference: Conduct conference a minimum of 15 days prior to placement of concrete at project site.

1. Before submitting design mixtures, review concrete design mixture and examine procedures for ensuring quality of concrete materials. Require representatives of each entity directly concerned with cast-in-place concrete to attend, including the following:
   a. Contractor's superintendent.
   b. Independent testing agency responsible for concrete design mixtures.
   c. Ready-mix concrete manufacturer.
   d. Concrete subcontractor.
   e. Special concrete finish subcontractor
2. Review special inspection and testing and inspecting agency procedures for field quality control, concrete finishes and finishing, cold- and hot-weather concreting procedures, curing procedures, construction contraction and isolation joints, and joint-filler strips, semirigid joint fillers, forms and form removal limitations, shoring and reshoring procedures, vapor-retarder installation, anchor rod and anchorage device installation tolerances, steel reinforcement installation, methods for achieving specified floor and slab flatness and levelness, floor and slab flatness and levelness measurement, concrete repair procedures, and concrete protection.

1.05 SUBMITTALS

A. Submit under the provisions of Division 01 - Section 01 33 00 – Submittal Procedures.

B. Product Data: Submit data for each type of product including, but not limited to, joint devices, attachment accessories, admixtures, form release agents and bonding agent.

C. Qualification Data: For Installer, Manufacturer, and Testing Agency.

D. Material Certifications: For each item listed, submit information indicated.

1. Coarse and Fine Aggregate
   a. Producer Name.
   b. Quarry Location.
   c. Contact Person and Phone Number.
   d. Material Test Reports: From a qualified testing agency, indicating compliance with requirements.
2. Cement
   a. Mill Test Report.
   b. Producer Name and Location.
3. Water
   a. Specify Potable Water Source.

E. Design Mixtures: For each concrete mixture. Submit alternate design mixtures when characteristics of materials, use of additional admixtures, Project conditions, weather, test results, or other circumstances warrant adjustments. Design Mixtures shall be reviewed according to the provisions of ACI 301.

1. Indicate amounts of mixing water to be withheld for later addition at Project site.

F. Concrete Mix Properties:

1. Mix Design
   a. Cementitious Materials (Lbs./C.Y.)
   b. Fine Aggregate (Lbs./C.Y.)
   c. Coarse Aggregate (Lbs./C.Y.)
   d. Water (Lbs./C.Y.)
   e. Admixtures.
2. Slump.
3. Air Content.

G. Floor surface flatness and levelness measurements indicating compliance with specified tolerances.

H. Minutes of pre-placement conference.

1.06 QUALITY ASSURANCE

A. Perform work in accordance with ACI 301

1. Maintain one copy of document on site.

B. Installer Qualifications: A qualified installer who employs on Project personnel qualified as ACI-certified Flatwork Technician and Finisher and a supervisor who is an ACI-certified Concrete Flatwork Technician.

C. Manufacturer Qualifications: A firm experienced in manufacturing ready-mixed concrete products and that complies with ASTM C 94 requirements for production facilities and equipment.

1. Manufacturer certified according to NRMCA's "Certification of Ready Mixed Concrete Production Facilities."
2. Engineer reserves the right to reject Manufacturer at any time and to require Contractor to obtain different supplier.

D. Testing Agency Qualifications: An independent agency, qualified according to ASTM C 1077 and ASTM E 329 for testing indicated.

E. Source Limitations: Obtain each type or class of cementitious material of the same brand from the same manufacturer's plant, obtain aggregate from single source, and obtain admixtures from single source from single manufacturer.

F. Concrete Testing Service: Engage a qualified independent testing agency to perform material evaluation tests and to design concrete mixtures.

1.07 PROJECT RECORD DOCUMENTS

A. Contractor shall accurately record actual locations of embedded utilities and components which are concealed from view.

1.08 COORDINATION

A. Coordinate Work under provisions of Division 01 – General Requirements.

PART 2 PRODUCTS

2.01 CONCRETE MATERIALS

A. Cementitious Material: Use the following cementitious materials, of the same type, brand, and source, throughout Project:
   1. Portland Cement: ASTM C 150, Type II. Supplement with the following:
      a. Expansive Cement: ASTM C845, Type K for use in Mix B only.
      b. Fly Ash: ASTM C 618, Class F.
      c. Ground Granulated Blast-Furnace Slag: ASTM C 989, Grade 100 or 120.

B. Silica Fume: ASTM C 1240, amorphous silica.

C. Normal-Weight Aggregates: ASTM C 33, Class 3S coarse aggregate or better, graded. Provide aggregates from a single source.
   1. Maximum size of coarse aggregate shall be in accordance with guidelines listed below:

Max. Aggregate Size	Type of Structure
1/2 inch	Concrete Toppings and Concrete Repair
3/4 inch	Mud Slabs, Stairs and Steps, Columns, Beams, Elevated Slabs, Flowable Fill
1 inch	Grade Beams, Equipment Pads, Slabs on Grade, Interior and Exterior Tank Walls, All Other Structures
1-1/2 inch	Caissons, Piles and Piers, Footings

D. Fine Aggregate: ASTM C 33, Free of materials with deleterious reactivity to alkali in cement.

E. Water: ASTM C 94 and potable.

2.02 ADMIXTURES

A. When required or permitted, admixtures shall conform to requirements specified below. Use of one or more admixtures in concrete shall be approved by Engineer prior to its use at job site.

B. Air-Entraining Admixture: ASTM C 260.

C. Chemical Admixtures: Provide admixtures certified by manufacturer to be compatible with other admixtures and that will not contribute water-soluble chloride ions exceeding those permitted in hardened concrete. Do not use calcium chloride or admixtures containing calcium chloride.
   1. Water-Reducing Admixture: ASTM C 494, Type A.
   2. Retarding Admixture: ASTM C 494, Type B.
   3. Accelerating Admixture: ASTM C 494, Type C.
   4. Water-Reducing and Retarding Admixture: ASTM C 494, Type D.
   5. High-Range, Water-Reducing Admixture: ASTM C 494, Type F.
   6. High-Range, Water-Reducing and Retarding Admixture: ASTM C 494, Type G.
   7. Plasticizing and Retarding Admixture: ASTM C 1017, Type II.
   8. Shrinkage Reducing Admixture: ASTM C 494, Type S; Maximum Length Change, tested in accordance with ASTM C 157, of 0.030%.

D. Field Service: When requested, the Contractor shall arrange to have a qualified concrete technician employed by manufacturer be available to assist in proportioning concrete materials for optimum use, to advise on proper use of admixture and adjustment of concrete mix proportions to meet job site and climatic conditions.

2.03 FLOOR AND SLAB TREATMENTS

A. (Reserved)

2.04 LIQUID FLOOR TREATMENTS

A. (Reserved)

2.05 RELATED MATERIALS

A. Expansion- and Isolation-Joint-Filler Strips: ASTM D 1751, asphalt-saturated cellulosic fiber, 1/2 inch thick (unless shown otherwise).

B. Semirigid Joint Filler: Two-component, semirigid, 100 percent solids, epoxy resin with a Type A shore durometer hardness of 80 per ASTM D 2240.

C. Latex Bonding Agent: ASTM C 1059, Type II, non-redispersible, acrylic emulsion or styrene butadiene.

D. Epoxy Bonding Adhesive: ASTM C 881, two-component epoxy resin, capable of humid curing and bonding to damp surfaces, of class suitable for application temperature and of grade to suit requirements, and as follows:
   1. Types IV and V, load bearing, for bonding hardened or freshly mixed concrete to hardened concrete.

E. Sealant and Primer: As specified in Section 07 92 00 – Joint Sealants.

2.06 REPAIR MATERIALS

A. Repair Underlayment: Cement-based, polymer-modified, self-leveling product that can be applied in thicknesses from 1/8 inch and that can be feathered at edges to match adjacent floor elevations.
   1. Cement Binder: ASTM C 150, portland cement or hydraulic or blended hydraulic cement as defined in ASTM C 219.
   2. Primer: Product of underlayment manufacturer recommended for substrate, conditions, and application.
   3. Aggregate: Well-graded, washed gravel, 1/8 to 1/4 inch or coarse sand as recommended by underlayment manufacturer.
   4. Compressive Strength: Not less than design f'c (psi) of concrete substrate at 28 days when tested according to ASTM C 109.

B. Repair Overlayment: Cement-based, polymer-modified, self-leveling product that can be applied in thicknesses from 1/4 inch and that can be filled in over a scarified surface to match adjacent floor elevations.
   1. Cement Binder: ASTM C 150, portland cement or hydraulic or blended hydraulic cement as defined in ASTM C 219.
   2. Primer: Product of topping manufacturer recommended for substrate, conditions, and application.
   3. Aggregate: Well-graded, washed gravel, 1/8 to 1/4 inch or coarse sand as recommended by topping manufacturer.
   4. Compressive Strength: Not less than design f'c (psi) of concrete substrate at 28 days when tested according to ASTM C 109.

2.07 CONCRETE MIXTURES, GENERAL

A. Prepare design mixtures for each type and strength of concrete, proportioned on the basis of laboratory trial mixture or field test data, or both, according to ACI 301.
   1. Use a qualified independent testing agency for preparing and reporting proposed mixture designs based on laboratory trial mixtures.

B. Cementitious Materials: Limit percentage, by weight, of cementitious materials other than portland cement in concrete as follows:
   1. Fly Ash: 25 percent.
   2. Combined Fly Ash and Pozzolan: 25 percent.
   3. Ground Granulated Blast-Furnace Slag: 50 percent.
   4. Combined Fly Ash or Pozzolan and Ground Granulated Blast-Furnace Slag: 50 percent portland cement minimum, with fly ash or pozzolan not exceeding 25 percent.
   5. Silica Fume: 10 percent.
   6. Combined Fly Ash, Pozzolans, and Silica Fume: 35 percent with fly ash or pozzolans not exceeding 25 percent and silica fume not exceeding 10 percent.
   7. Combined Fly Ash or Pozzolans, Ground Granulated Blast-Furnace Slag, and Silica Fume: 50 percent with fly ash or pozzolans not exceeding 25 percent and silica fume not exceeding 10 percent.

C. Limit water-soluble, chloride-ion content in hardened concrete to 0.30 percent by weight of cement.

D. Admixtures: Use admixtures according to manufacturer's written instructions.
   1. Use water-reducing, high-range water-reducing, or plasticizing admixture in concrete, as required, for placement and workability.
   2. Use water-reducing and retarding admixture when required by high temperatures, low humidity, or other adverse placement conditions.
   3. Use water-reducing admixture in pumped concrete, concrete for heavy-use industrial slabs and parking structure slabs, concrete required to be watertight, and concrete with a water-cementitious materials ratio below 0.50.
   4. Use corrosion-inhibiting admixture in concrete mixtures where indicated.

2.08 CONCRETE MIXTURES FOR BUILDING AND TANK ELEMENTS

A. Mix Design A: Proportion normal-weight concrete mixture for all parts of Work as follows:
   1. Minimum Compressive Strength: 2500 psi at 7 days, 4500 psi at 28 days
   2. Maximum Water-Cementitious Materials Ratio: 0.42
   3. Cementitious material: Type II required, fly ash optional
   4. Slump: 4 inches; 8 inches for concrete with verified slump of 2 to 4 inches before adding high-range water-reducing admixture or plasticizing admixture
   5. Air Content:

Max. Aggregate Size	Air Content (percent)
1/2 inch	7 ± 1.5
3/4 inch	6 ± 1.5
1 inch	6 ± 1.5
1-1/2 inch	5.5 ± 1.5

      a. Interior floor slabs located indoors not subjected to exposure conditions shall not contain entrained air.

2.09 CONCRETE MIXING

A. Ready-Mixed Concrete: Measure, batch, mix, and deliver concrete according to ASTM C 94 and ASTM C 1116 and furnish batch ticket information.
   1. When air temperature is between 85 and 90 deg F, reduce mixing and delivery time from 1-1/2 hours to 75 minutes; when air temperature is above 90 deg F, reduce mixing and delivery time to 60 minutes.
   2. In addition to batch ticket information required by ASTM C 94, the following shall be provided:
      a. Concrete Design Strength.
      b. Type and amount of cement.
      c. Class and amount of coal fly ash, or raw or calcined natural pozzolans, if present.
      d. Class and amount of ground granulated blast furnace slag, if present.
      e. Type and amount of silica fume, if present.
      f. Type and amount of admixtures.
      g. Type and amount of fiber reinforcement, if present.

h. Maximum size of aggregate.

i. Amount of water added at job site shall be noted on ticket. No water is to be added at job site unless acceptable to Engineer.

3. One copy of delivery ticket shall be furnished to Engineer at time truck arrives at job site.

PART 3 EXECUTION

3.01 INSPECTION

A. Verify site conditions under provisions of Division 01 - General Requirements.

B. Verify requirements for concrete cover over reinforcement have been met.

C. Verify that anchors, seats, plates, reinforcement and other items to be cast into concrete are accurately placed and positioned securely.

D. Verify that installation of formwork, reinforcement, and embedded items is complete and that required inspections have been performed.

3.02 PREPARATION

A. Prepare previously placed concrete by cleaning with steel brush and applying bonding agent in accordance with manufacturer's instructions.

B. In locations where new concrete is dowelled to existing work, drill holes in existing concrete, insert steel dowels and pack solid with non-shrink or epoxy grout, unless noted otherwise.

C. Contractor shall inform Engineer 24 hours in advance of any concrete pours, indicating location and size of pour by submitting completed pre-pour checklist.

3.03 CONCRETE PLACEMENT

A. Concrete shall be conveyed and placed in conformance with ACI 301. Contractor shall instruct laborers on proper vibration techniques required for each situation.

B. Before test sampling and placing concrete, water may be added at Project site, subject to limitations of ACI 301.

1. Do not add water to concrete after adding high-range water-reducing admixtures to mixture.

C. Delivery of mixed concrete shall be regulated so that there will not be an interruption of more than 20 minutes duration in placement of concrete. Engineer may waive these requirements if slump and temperature requirements are met without adding water.

D. At beginning of concrete placement, a spare vibrator shall be on job site in addition to vibrators to be used during placement.

E. If electrical power for equipment used in the concrete placement is provided by a portable electric generator, an additional back-up portable electric generator or an alternate reliable electrical source shall be available prior to and during the concrete placement.

F. Deposit concrete continuously in one layer or in horizontal layers of such thickness that no new concrete will be placed on concrete that has hardened enough to cause seams or planes of weakness. If a section cannot be placed continuously, provide construction joints in accordance with Contract Documents. Deposit concrete to avoid segregation.
   1. Deposit concrete in horizontal layers of depth to not exceed formwork design pressures and in a manner to avoid inclined construction joints. Concrete placed in vertical forms shall be placed in lifts of not more than 2 feet which shall be kept practically level.
   2. Chutes shall extend as nearly as practicable to point of deposit. Concrete shall not be dropped more than 6 feet. For walls or column placements in excess of 6 feet vertical height, tremie shall be used in placing concrete. If reinforcing steel or formwork is such that tremie cannot be used, method of placement shall be approved by Engineer.
   3. Consolidate placed concrete with mechanical vibrating equipment according to ACI 301.
   4. Do not use vibrators to transport concrete inside forms. Insert and withdraw vibrators vertically at uniformly spaced locations to rapidly penetrate placed layer and at least 6 inches into preceding layer. Do not insert vibrators into lower layers of concrete that have begun to lose plasticity. At each insertion, limit duration of vibration to time necessary to consolidate concrete and complete embedment of reinforcement and other embedded items without causing mixture constituents to segregate.

G. Deposit and consolidate concrete for floors and slabs in a continuous operation, within limits of construction joints, until placement of a panel or section is complete.
   1. Consolidate concrete during placement operations so concrete is thoroughly worked around reinforcement and other embedded items and into corners.
   2. Maintain reinforcement in position on chairs during concrete placement.
   3. Screed slab surfaces with a straightedge and strike off to correct elevations.
   4. Slope surfaces uniformly to drains where required.
   5. Begin initial floating using bull floats or darbies to form a uniform and open-textured surface plane, before excess bleedwater appears on the surface. Do not further disturb slab surfaces before starting finishing operations.

H. Pumping Concrete: Comply with ACI 301 and as follows.
   1. Selection of pipe diameter for pumping shall be such that smallest inside diameter is no less than 4 inches or 3 times nominal maximum size coarse aggregate, whichever is greater.
   2. Pumping lines shall be lubricated with minimum of 1 cubic yard of grout prior to pumping regular mix through lines.
   3. Contractor shall show sufficient evidence prior to use of pump that mix is pumpable. This shall be accomplished by submittal, in accordance with Specification Section 01 33 00, of a certification from supplier that mix has performed satisfactorily on previous jobs of similar nature or by performing

full scale field test for pumpability with line height and other variables being identical (or nearly so) to that of actual placing conditions.

I. Cold-Weather Placement: Comply with ACI 306.1 and as follows. Protect concrete work from physical damage or reduced strength that could be caused by frost, freezing actions, or low temperatures.
   1. When average high and low temperature is expected to fall below 40 deg F for three successive days, maintain delivered concrete mixture temperature within the temperature range required by ACI 301.
   2. Do not use frozen materials or materials containing ice or snow. Do not place concrete on frozen subgrade or on subgrade containing frozen materials.
   3. Do not use calcium chloride, salt, or other materials containing antifreeze agents or chemical accelerators unless otherwise specified and approved in mixture designs.

J. Hot-Weather Placement: Comply with ACI 301 and ACI 305.1 and as follows:
   1. Maintain concrete temperature below 90 deg F at time of placement. Chilled mixing water or chopped ice may be used to control temperature, provided water equivalent of ice is calculated to total amount of mixing water. Using liquid nitrogen to cool concrete is Contractor's option.
   2. Fog-spray forms, steel reinforcement, and subgrade just before placing concrete. Keep subgrade uniformly moist without standing water, soft spots, or dry areas.

3.04 FINISHING FORMED SURFACES

A. Defects in new concrete such as rock pockets and tie holes shall be repaired when forms are removed. Grout used for repair shall contain a bonding admixture conforming to ASTM C1059, Type II. Use admixture according to manufacturer's written instructions. This shall be done for all surface finishes of formed concrete surfaces.
   1. Snap-off form ties shall be removed to a point 1" beneath surface of concrete and resulting depression shall be carefully pointed with grout.
   2. Removable form tie holes shall be plugged with X-Plug by Sika Greenstreak, or Engineer approved equal, and packed with grout.

B. Rough-Formed Finish: As-cast concrete texture imparted by form-facing material with tie holes and defects repaired and patched.
   1. Apply to concrete surfaces to be covered by earth fill.

C. Smooth-Formed Finish: As-cast concrete texture imparted by form-facing material, arranged in an orderly and symmetrical manner with a minimum of seams. Repair and patch tie holes and defects. Remove fins and other projections that exceed specified limits on formed-surface irregularities.
   1. Apply to exposed concrete surfaces and submerged surfaces.

D. Rubbed Finish: Apply the following to smooth-formed finished as-cast concrete surfaces indicated on plans:
   1. Wet down the entire area and fill all air pockets, voids and other depressions with grout to produce a smooth dense surface free from pits and other irregularities. Thoroughly scrub into the wetted surface a mortar mixture

consisting of 1 part well graded sand passing the No. 30 sieve, 1 part portland cement and a sufficient quantity of a bonding admixture (described previously) to produce a workable mixture. Scrubbing shall be accomplished by use of a rubber or wood float following by finishing with a cork float or a light brush. The resulting surface shall be true and uniform, with no discernible thickness of mortar on the surface.

2. Finish shall extend a minimum of one foot below final grade.

E. Related Unformed Surfaces: At tops of walls, horizontal offsets, and similar unformed surfaces adjacent to formed surfaces, strike off smooth and finish with a texture matching adjacent formed surfaces. Continue final surface treatment of formed surfaces uniformly across adjacent unformed surfaces unless otherwise indicated.

F. Edges and corners of structures, which are exposed in the completed structures, shall be chamfered 3/4 inch, unless noted otherwise.

3.05 FINISHING FLOORS AND SLABS

A. General: Comply with ACI 301 recommendations for screeding, restraightening, and finishing operations for concrete surfaces. Do not wet concrete surfaces.

B. Scratch Finish: While still plastic, texture concrete surface that has been screeded and bull-floated or darbied. Use stiff brushes, brooms, or rakes to produce a profile amplitude of 1/4 inch in one direction.

1. Apply scratch finish to surfaces to be covered with fill material and surfaces to receive concrete toppings.

C. Float Finish: Consolidate surface with power-driven floats or by hand floating if area is small or inaccessible to power driven floats. Restraighten, cut down high spots, and fill low spots. Repeat float passes and restraightening until surface is left with a uniform, smooth, granular texture.

1. Apply float finish to surfaces to receive trowel finish and to be covered with built-up or membrane roofing.

D. Trowel Finish: After applying float finish, apply first troweling and consolidate concrete by hand or power-driven trowel. Continue troweling passes and restraighten until surface is free of trowel marks and uniform in texture and appearance. Grind smooth any surface defects that would telegraph through applied coatings or floor coverings.

1. Apply a trowel finish to surfaces exposed to view and to clarifier floor grout.

E. Broom Finish: In lieu of final troweling, apply a broom finish to exterior concrete slabs, sidewalks, platforms, steps, ramps, and elsewhere as indicated.

1. Immediately after float finishing, slightly roughen trafficked surface by brooming with fiber-bristle broom perpendicular to main traffic route. Coordinate required final finish with Engineer before application.

F. Edges and corners of structures, which are exposed in the completed structures, shall be chamfered 3/4 inch, unless noted otherwise. Edges of walks and slabs on grade shall be finished with an edging tool.

G. Walks and slabs on grade shall have contraction joints scored in the concrete to control cracking. The spacing of the scored joints shall be equal to the width of the walk or slab unless otherwise specified or noted on the plans.

3.06 MISCELLANEOUS CONCRETE ITEMS

A. Filling In: Fill in holes and openings left in concrete structures after work of other trades is in place unless otherwise indicated. Mix, place, and cure concrete, as specified, to blend with in-place construction. Provide other miscellaneous concrete filling indicated or required to complete the Work.

B. Equipment Bases and Foundations: Provide machine and equipment bases and foundations as shown on Drawings. Set anchor bolts for machines and equipment at correct elevations, complying with diagrams or templates from manufacturer furnishing machines and equipment.

C. Steel Pan Stairs: Provide concrete fill for steel pan stair treads, landings, and associated items. Cast-in inserts and accessories as shown on Drawings. Screed, tamp, and trowel finish concrete surfaces.

3.07 JOINT FILLERS (RESERVED)

3.08 CONCRETE SURFACE REPAIRS

A. Defective Concrete: Repair and patch defective areas when directed by Engineer. Remove and replace concrete that cannot be repaired and patched to Engineer's approval.

B. Patching Mortar: Mix dry-pack patching mortar, consisting of one part portland cement to two and one-half parts fine aggregate passing a No. 16 sieve, using only enough water and/or bonding agent for handling and placing.

C. Repairing Formed Surfaces: Surface defects include color and texture irregularities, cracks, spalls, air bubbles, honeycombs, rock pockets, fins and other projections on the surface, and stains and other discolorations that cannot be removed by cleaning.
   1. Immediately after form removal, cut out honeycombs, rock pockets, and voids more than 1/2 inch in any dimension to solid concrete. Limit cut depth to 3/4 inch. Make edges of cuts perpendicular to concrete surface. Clean, dampen with water, and brush-coat holes and voids with bonding agent. Fill and compact with patching mortar before bonding agent has dried. Fill form-tie voids with patching mortar or cone plugs secured in place with bonding agent.
   2. Repair defects on surfaces exposed to view by blending white portland cement and standard portland cement so that, when dry, patching mortar will match surrounding color. Patch a test area at inconspicuous locations to verify mixture and color match before proceeding with patching. Compact mortar in place and strike off slightly higher than surrounding surface.
   3. Repair defects on concealed formed surfaces that affect concrete's durability and structural performance as determined by Engineer.

D. Repairing Unformed Surfaces: Test unformed surfaces, such as floors and slabs, for finish and verify surface tolerances specified for each surface. Correct low and high areas. Test surfaces sloped to drain for trueness of slope and smoothness; use a sloped template.
   1. Repair finished surfaces containing defects. Surface defects include spalls, popouts, honeycombs, rock pockets, crazing and cracks in excess of 0.01 inch wide or that penetrate to reinforcement or completely through unreinforced sections regardless of width, and other objectionable conditions.
   2. After concrete has cured at least 14 days, correct high areas by grinding.
   3. Correct localized low areas during or immediately after completing surface finishing operations by cutting out low areas and replacing with patching mortar. Finish repaired areas to blend into adjacent concrete.
   4. Repair defective areas, except random cracks and single holes 1 inch or less in diameter, by cutting out and replacing with fresh concrete. Remove defective areas with clean, square cuts and expose steel reinforcement with at least a 3/4 inch clearance all around. Dampen concrete surfaces in contact with patching concrete and apply bonding agent. Mix patching concrete of same materials and mixture as original concrete except without coarse aggregate. Place, compact, and finish to blend with adjacent finished concrete. Cure in same manner as adjacent concrete.
   5. Repair random cracks and single holes 1 inch or less in diameter with patching mortar. Groove top of cracks and cut out holes to sound concrete and clean off dust, dirt, and loose particles. Dampen cleaned concrete surfaces and apply bonding agent. Place patching mortar before bonding agent has dried. Compact patching mortar and finish to match adjacent concrete. Keep patched area continuously moist for at least 72 hours.

E. Perform structural repairs of concrete, subject to Engineer's approval, using epoxy adhesive and patching mortar.

F. Repair materials and installation not specified above may be used, subject to Engineer's approval.

3.09 PLANT QUALITY CONTROL

A. Sufficient testing shall be done by the supplier to assure the quality and consistency of the mix produced. The field tests are not to be used as a gauge of this quality.

3.10 FIELD QUALITY CONTROL

A. Provide under provisions of Division 01 - General Requirements.

B. Testing Agency: Engage a qualified testing and inspecting agency to perform tests and inspections and to submit reports.

C. Inspections:
   1. Steel reinforcement placement.
   2. Steel reinforcement welding.
   3. Headed bolts and studs.
   4. Verification of use of required design mixture.
   5. Concrete placement, including conveying and depositing.

6. Curing procedures and maintenance of curing temperature.
7. Verification of concrete strength before removal of shores and forms from beams and slabs.

D. Concrete Tests: Testing of composite samples of fresh concrete obtained according to ASTM C 172 shall be performed according to the following requirements:
   1. Testing Frequency: Obtain one composite sample for each day's pour of each concrete mixture exceeding 5 cu. yd., but less than 25 cu. yd., plus one set for each additional 50 cu. yd. or fraction thereof.
      a. When frequency of testing will provide fewer than five compressive-strength tests for each concrete mixture, testing shall be conducted from at least five randomly selected batches or from each batch if fewer than five are used.
   2. Slump: ASTM C 143; one test at point of delivery for each composite sample, but not less than one test for each day's pour of each concrete mixture. Perform additional tests when concrete consistency appears to change.
   3. Air Content: ASTM C 231, pressure method, for normal-weight concrete; one test for each composite sample, but not less than one test for each day's pour of each concrete mixture.
   4. Concrete Temperature: ASTM C 1064; one test hourly when air temperature is 40 deg F and below and when 80 deg F and above, and one test for each composite sample.
   5. Compression Test Specimens: ASTM C 31.
      a. Cast and laboratory cure one set of four standard cylinder specimens for each composite sample.
      b. Where the Contractor intends to remove load supporting forms (when conditions permit), cast and field cure one set of four standard cylinder specimens for each composite sample. Field curing shall continue up to within four hours prior to laboratory testing. The Contractor shall be responsible for the safe field storage of the concrete cylinders during the field curing process.
   6. Compressive-Strength Tests: ASTM C 39; test one laboratory-cured specimen at 7 days and two specimens at 28 days. The fourth cylinder shall be held for testing as a check cylinder.
      a. A 28 day compressive-strength test shall be the average compressive strength of two specimens obtained from same composite sample.
   7. Test results shall be submitted in writing to Engineer, concrete manufacturer, and Contractor within 48 hours of testing. Reports of compressive-strength tests shall contain:
      a. Project identification name and number
      b. Name of concrete testing and inspecting agency
      c. Date of concrete placement
      d. Date of compressive strength test
      e. Location of concrete batch in Work
      f. Design compressive strength at 28 days

g. Mix design designation
h. Slump of concrete
i. Temperature of concrete at placement
j. Percent air entrained
k. Number of specimens tested
l. Compressive breaking strength
m. Type of break for both 7- and 28-day tests

8. Strength of each concrete mixture will be satisfactory if every average of any three consecutive compressive-strength tests equals or exceeds specified compressive strength and no compressive-strength test value falls below specified compressive strength by more than 500 psi.
9. Additional Tests: Testing and inspecting agency shall make additional tests of concrete when test results indicate that slump, air entrainment, compressive strengths, or other requirements have not been met, as directed by Engineer.
   a. If compressive strength requirements are not met, steps shall be taken to increase average of subsequent strength test results. Engineer shall have right to order a change in proportions of mix for remaining work. Engineer shall also have right to require conditions of temperature and moisture necessary to secure required strength.
   b. If any strength test of laboratory-cured cylinders falls below specified compressive strength by more than 500 psi or if tests of field-cured cylinders indicate deficiencies in protection or curing, steps shall be taken to assure that the load-carrying capacity of structure is not jeopardized.
   c. If likelihood of low-strength concrete is confirmed and computations indicate that load-carrying capacity may have been significantly reduced, tests of cores drilled from area in question may be required in accordance with ASTM C 42. In such cases, three cores shall be taken for each strength test more than 500 psi below specified compressive strength. If concrete in structure will be dry under service condition, cores shall be air dried (temperature 60° to 80° F., relative humidity less than 60%) for 7 days before test and shall be tested dry. If concrete in structure will be more than superficially wet under service conditions, cores shall be immersed in water for at least 40 hours and be tested wet.
   d. Concrete in an area represented by core tests shall be considered structurally adequate if average of three cores is equal to at least 85% of specified compressive strength and if no single core is less than 75% of specified compressive strength. To check testing accuracy, locations represented by erratic core strengths may be retested.
   e. If criteria of paragraph (d) are not met, and if structural adequacy remains in doubt, the Engineer may order load tests as outlined in ACI 318 for questionable portion of structure or require other appropriate action.

f. All costs associated with performing analytical investigations, core testing and load testing shall be paid for by Contractor.

10. Nondestructive Testing: Impact hammer, sonoscope, or other nondestructive device may be permitted by Engineer but will not be used as sole basis for approval or rejection of concrete.
11. Additional testing and inspecting, at Contractor's expense, will be performed to determine compliance of replaced or additional work with specified requirements.
12. Correct deficiencies in the Work that test reports and inspections indicate do not comply with the Contract Documents.

E. Measure floor and slab flatness and levelness according to ASTM E 1155 within 48 hours of finishing.

END OF SECTION 03 31 00

PART 1 GENERAL

1.01 RELATED DOCUMENTS

A. Drawings and general provisions of the Contract, including General and Supplementary Conditions and Division 01 Specification Sections, apply to work of this Section.

1.02 SUMMARY

A. Section includes initial and final curing, sealing of vertical foundation wall surfaces and exterior concrete flat work and curing, sealing and dust proofing of interior concrete floor slab surfaces.

B. Related Sections:
1. Section 01 33 00 – Submittal Procedures
2. Section 03 31 00 – Structural Concrete
3. Section 13 21 10 – Composite Elevated Water Storage Tank

C. References:
1. AASHTO M182 – Standard Specification for Burlap Cloth Made from Jute or Kenaf and Cotton Mats.
2. ACI 301-16 – Specifications for Structural Concrete.
3. ACI 305.1-14 – Specification for Hot Weather Concreting.
4. ACI 306.1-90 – Standard Specification for Cold Weather Concreting.
5. ACI 308.1-11 – Standard Specification for Curing Concrete.
6. ASTM C171 – Standard Specification for Sheet Materials for Curing Concrete.
7. ASTM C309 – Standard Specification for Liquid Membrane-Forming Compounds for Curing Concrete.
8. ASTM C1315 – Standard Specification for Liquid Membrane-Forming Compounds Having Special Properties for Curing and Sealing Concrete.
9. ASTM D2103 – Standard Specification for Polyethylene Film and Sheeting.

1.03 DEFINITIONS

A. (RESERVED)

1.04 SUBMITTALS

A. Submit under the provisions of Division 01 - Section 01 33 00 – Submittal Procedures.

B. Product Data: Provide data on curing compounds, including compatibilities and limitations.

1.05 QUALITY ASSURANCE

A. Perform work in accordance with ACI 301, ACI 305.1, ACI 306.1 and ACI 308.1.
   1. Maintain one copy of each document on site.

1.06 DELIVERY, STORAGE, AND HANDLING

A. Deliver, store, protect, and handle products under provisions of Division 01 - General Requirements.

B. Deliver curing materials in manufacturer's packaging including application instructions.

PART 2 PRODUCTS

2.01 EVAPORATION RETARDER:

A. Waterborne, monomolecular film forming, manufactured for application to fresh concrete.

B. Products: Subject to compliance with requirements, provide one of the products specified:
   1. Axim Italcementi Group, Inc.; CATEXOL CimFilm.
   2. BASF Construction Chemicals - Building Systems; Confilm.
   3. ChemMasters; SprayFilm.
   4. Conspec by Dayton Superior; Aquafilm.
   5. Dayton Superior Corporation; Sure Film (J-74).
   6. Edoco by Dayton Superior; BurkeFilm.
   7. Euclid Chemical Company (The), an RPM company; Eucobar.
   8. Kaufman Products, Inc.; Vapor-Aid.
   9. Lambert Corporation; LAMBCO Skin.
   10. L&M Construction Chemicals, Inc.; E-CON.
   11. Meadows, W. R., Inc.; EVAPRE.
   12. Metalcrete Industries; Waterhold.
   13. Nox-Crete Products Group; MONOFILM.
   14. Sika Corporation; SikaFilm.
   15. SpecChem, LLC; Spec Film.
   16. Symons by Dayton Superior; Finishing Aid.
   17. TK Products, Division of Sierra Corporation; TK-2120 TRI-FILM.
   18. Unitex; PRO-FILM.
   19. Vexcon Chemicals, Inc.; Certi-Vex Envio Set.
   20. Or Engineer approved equal.

2.02 ABSORPTIVE COVER:

A. AASHTO M 182, Class 2, burlap cloth made from jute or kenaf, weighing approximately 9 oz./sq. yd. when dry.

2.03 MOISTURE-RETAINING COVER:

A. ASTM C171, polyethylene film or white burlap-polyethylene sheet.

2.04 WATER:

A. ASTM C94 and potable.

B. Engineer approved equal.

2.05 CLEAR, WATERBORNE, MEMBRANE-FORMING CURING COMPOUND

A. ASTM C309, Type 1, Class B, dissipating
   1. Euclid Chemical Company – Kurez DR-100
   2. Dayton Superior – Clear Resin Cure J11W
   3. BASF – MasterKure 181

2.06 CLEAR, SOLVENT-BORNE, MEMBRANE-FORMING CURING AND SEALING COMPOUND:

A. ASTM C1315, Type 1, Class A.

B. Products: Subject to compliance with requirements, provide one of the products specified.
   1. BASF Construction Chemicals - Building Systems; Kure-N-Seal 25 LV.
   2. ChemMasters; Spray-Cure & Seal Plus.
   3. Conspec by Dayton Superior; Sealcure 1315.
   4. Dayton Superior Corporation; Day-Chem Cure and Seal (J-22UV).
   5. Edoco by Dayton Superior; Cureseal 1315.
   6. Euclid Chemical Company (The), an RPM company; Super Diamond Clear; LusterSeal 300.
   7. Kaufman Products, Inc.; Sure Cure 25.
   8. Lambert Corporation; UV Super Seal.
   9. L&M Construction Chemicals, Inc.; Lumiseal Plus.
   10. Meadows, W. R., Inc.; CS-309/30.
   11. Metalcrete Industries; Seal N Kure 30.
   12. Right Pointe; Right Sheen 30.
   13. Vexcon Chemicals, Inc.; Certi-Vex AC 1315.
   14. Or Engineer approved equal.

C. COATING SCHEDULE
   1. Exterior & Interior Concrete Foundation Walls: One coat application
   2. Exterior Concrete Flatwork: One coat application
   3. Interior Concrete Floor Slabs: Two coat application

PART 3 EXECUTION

3.01 INSPECTION

A. Verify substrate conditions under provisions of Division 01 - General Requirements.

B. Verify that substrate surfaces are ready to be cured.

3.02 CURING AND PROTECTION

A. General: Protect freshly placed concrete from premature drying and excessive cold or hot temperatures. Comply with ACI 306.1 for cold-weather protection and ACI 305.1 for hot-weather protection during curing.

B. Evaporation Retarder: Apply evaporation retarder to unformed concrete surfaces if hot, dry, or windy conditions cause moisture loss approaching 0.2 lb/sq. ft./hour before and during finishing operations. Apply according to manufacturer's written instructions after placing, screeding, and bull floating or darbying concrete, but before float finishing.

C. Formed Surfaces: Cure formed concrete surfaces, including underside of beams, supported slabs, and other similar surfaces. If forms remain during curing period, moist cure after loosening forms. If removing forms before end of curing period, continue curing for the remainder of the curing period.

D. Unformed Surfaces: Begin curing immediately after finishing concrete. Cure unformed surfaces, including floors and slabs, concrete floor toppings, and other surfaces.

E. Cure concrete according to ACI 308.1, by one or a combination of the following methods:

1. Moisture Curing: Keep surfaces continuously moist for not less than seven days with the following materials:
    a. Water.
    b. Continuous water-fog spray.
    c. Absorptive cover, water saturated, and kept continuously wet. Cover concrete surfaces and edges with 12-inch lap over adjacent absorptive covers.
2. Moisture-Retaining-Cover Curing: Cover concrete surfaces with moisture-retaining cover for curing concrete, placed in widest practicable width, with sides and ends lapped at least 12 inches, and sealed by waterproof tape or adhesive. Cure for not less than seven days. Immediately repair any holes or tears during curing period using cover material and waterproof tape.
    a. Moisture cure or use moisture-retaining covers to cure concrete surfaces to receive floor coverings.
    b. Moisture cure or use moisture-retaining covers to cure concrete surfaces to receive penetrating liquid floor treatments.

c. Cure concrete surfaces to receive floor coverings with either a moisture-retaining cover or a curing compound that the manufacturer certifies will not interfere with bonding of floor covering used on Project.

3. Curing and Sealing Compound: Apply uniformly to surfaces indicated in a continuous operation by power spray or roller according to manufacturer's written instructions. Recoat areas subjected to heavy rainfall within three hours after initial application. Repeat process 24 hours later and apply a second coat where indicated. Maintain continuity of coating and repair damage during curing period.

F. Cold Weather Concreting and Curing: Placing and protection of concrete shall be in conformance with ACI 306.1 and shall meet approval of Engineer prior to its use.

1. Contractor shall maintain temperature records of concrete. When concrete is placed, the time, date, weather conditions, outside air temperature and temperature of concrete shall be recorded. Temperatures shall be recorded at several locations (or as directed by Engineer) within enclosures and on concrete surfaces, edges and corners to obtain the range of temperatures. The maximum and minimum temperatures in each 24-hour period shall be recorded using measuring devices embedded in concrete surface or by placing thermometer against surface under temporary cover of thick insulation until a constant temperature is registered.

G. Hot Weather Concreting and Curing: Placing and protection of concrete shall be in conformance with ACI 305.1 and shall meet approval of Engineer prior to its use.

1. Contractor shall conform to ACI 305.1 when following conditions exist:
   a. Any combination of high air temperature, low relative humidity and high wind velocity.
   b. Any combination of rising air temperature and falling relative humidity.
2. Under hot weather conditions, Contractor shall be responsible for making arrangements for installation of windbreaks, shading, fog spraying, sprinkling, ponding or wet covering of light color. Arrangements shall be made in advance of placement and such protective measures shall be taken as quickly as concrete hardening and finishing operations will allow.

3.03 PROTECTION OF FINISHED WORK

A. Protect finished work under provisions Division 01 - General Requirements.

B. Do not permit traffic over unprotected floor surface.

3.04 FINAL ACCEPTANCE OF COMPLETE WORK

A. The work shall be complete in every detail and the finished work approved by the Architect / Engineer and Owner before final acceptance.

END OF SECTION 03 39 00

PART 1 GENERAL

1.01 RELATED DOCUMENTS

A. Drawings and general provisions of the Contract, including General and Supplementary Conditions and Division 01 Specification Sections, apply to work of this Section.

1.02 SUMMARY

A. Section Includes non-shrink grout, epoxy grout, vessel grout, waterproofing grout, fast setting grout, and mass application grout.

B. Related Sections:
1. Section 01 33 00 – Submittal Procedures
2. Section 03 11 00 – Concrete Forming
3. Section 03 15 00 – Concrete Accessories
4. Section 03 20 00 – Concrete Reinforcing
5. Section 03 31 00 – Structural Concrete
6. Section 03 39 00 – Concrete Curing
7. Section 13 21 10 – Composite Elevated Water Storage Tank

C. References:
1. ACI 301-16 – Specifications for Structural Concrete.
2. ASTM C31 – Standard Practice for Making and Curing Concrete Test Specimens in the Field.
3. ASTM C33 – Standard Specification for Concrete Aggregates.
4. ASTM C94 – Standard Specification for Ready Mixed Concrete.
5. ASTM C109 – Standard Test Method for Compressive Strength of Hydraulic Cement Mortars.
6. ASTM C143 – Standard Test Method for Slump of Hydraulic Cement Concrete.
7. ASTM C150 – Standard Specification for Portland Cement.
8. ASTM C157 – Standard Test Method for Length Change of Hardened Hydraulic-Cement Mortar and Concrete.
9. ASTM C172 – Standard Practice of Sampling Freshly Mixed Concrete.
10. ASTM C231 – Standard Test Method for Air Content of Freshly Mixed Concrete by the Pressure Method.
11. ASTM C260 – Standard Specification for Air Entraining Admixtures for Concrete.
12. ASTM C307 – Standard Test Method for Tensile Strength of Chemical Resistant Mortar, Grouts, and Monolithic Surfacings.
13. ASTM C494 – Standard Specification for Chemical Admixtures for Concrete.
14. ASTM 579 – Standard Test Methods for Compressive Strengths of Chemical Resistant Mortars, Grouts, Monolithic Surfacings, and Polymer Concretes.

15. ASTM 580 – Standard Test Methods for Flexural Strengths and Modulus of Elasticity of Chemical Resistant Mortars, Grouts, Monolithic Surfacings, and Polymer Concretes.
16. ASTM C884 – Standard Test Method for Thermal Compatibility Between Concrete and an Epoxy Resin Overlay.
17. ASTM C939 – Standard Test Method for Flow of Grout for Preplaced Aggregate Concrete (Flow Cone Method).
18. ASTM C1017 – Standard Specification for Chemical Admixtures for Use in Producing Flowing Concrete.
19. ASTM C1064 – Standard Test Method for Temperature of Freshly Mixed Hydraulic-Cement Concrete.
20. ASTM C1077 – Standard Practice for Agencies Testing Concrete and Concrete Aggregates for Use in Construction and Criteria for Testing Agency Evaluation.
21. ASTM C 1090 – Standard Test Method for Measuring Changes in Height of Cylindrical Specimens of Hydraulic Cement Grout.
22. ASTM C1116 – Standard Specification for Fiber Reinforced Concrete.
23. ASTM C1181 – Standard Test Methods for Compressive Creep of Chemical Resistant Polymer Machinery Grouts.
24. ASTM E329 – Standard Specification for Agencies Engaged in Construction Inspection, Special Inspection, or Testing Materials Used in Construction.
25. COE CRD-C 621 – Non-Shrink Grout.

1.03 DEFINITIONS

A. (RESERVED)

1.04 SUBMITTALS

A. Submit under the provisions of Division 01 - Section 01 33 00 – Submittal Procedures.

B. Product Data: Provide manufacturer’s specifications, surface preparation and application methods.

C. Test Data: Provide confirmation of compliance with specified requirements.

D. Material Certifications: For each item listed, provide information indicated.
   1. Aggregate
      a. Producer Name.
      b. Quarry Location.
      c. Contact Person and Phone Number.
      d. Material Test Reports: From a qualified testing agency, indicating compliance with requirements.
   2. Cement
      a. Mill Test Report.
      b. Producer Name and Location.
   3. Water
      a. Specify Potable Water Source.

E. Field quality-control reports.

1.05 QUALITY ASSURANCE

A. Perform work in accordance with ACI 301.

1. Maintain one copy of document on site.

B. Installer Qualifications: Firm with minimum 5 years documented experience with projects of similar scope, design, and materials.

C. Manufacturer Qualifications: Single manufacturer for each product with 20 years experience in the production of products required by this section.

1. Engineer reserves the right to reject Manufacturer at any time and to require Contractor to obtain different supplier.

D. Testing Agency Qualifications: An independent agency, qualified according to ASTM C 1077 and ASTM E 329 for testing indicated.

E. Source Limitations: Obtain each type or class of cementitious material of the same brand from the same manufacturer's plant, obtain aggregate from single source, and obtain admixtures from single source from single manufacturer.

F. Concrete Testing Service: Engage a qualified independent testing agency to perform material evaluation tests.

1.06 DELIVERY, STORAGE, AND HANDLING

A. Deliver, store, protect, and handle products under provisions of Division 01 - General Requirements.

B. Deliver grouting materials in manufacturer's packaging including application instructions.

C. Store products according to manufacturer’s instructions.

1.07 COORDINATION

A. Coordinate Work under provisions of Division 01 – General Requirements.

PART 2 PRODUCTS

2.01 GROUT MATERIALS

A. Cementitious Material: Use the following cementitious materials, of the same type, brand, and source, throughout Project:

1. Portland Cement: ASTM C 150, Type I.

B. Normal-Weight Aggregates: ASTM C 33, Class 3S coarse aggregate or better, graded. Provide aggregates from a single source.

C. Fine Aggregate: ASTM C 33, Free of materials with deleterious reactivity to alkali in cement.

D. Water: ASTM C 94 and potable.

2.02 GROUTS

A. Type G1: Non-Shrink Grout.
   1. Description: Non-shrink, non-metallic grout.
   2. Application: Grouts not specified as other types shall be Type G1.
   3. Compliance:
      a. ASTM C 1107, Grades A, B, and C.
      b. COE CRD-C 621.
   4. Positive Expansion: ASTM C 1090.
   5. Minimum Compressive Strength, ASTM C 579:
      a. 3 days: 4000 psi
      b. 28 days: 7500 psi
   6. ASTM C 939: Grout shall remain fluid for a working time of 30 minutes over a temperature range of 45 deg F to 90 deg F.

B. Type G2: Epoxy Grout.
   1. Description: 3-part epoxy-resin-based grout.
   2. Application: Bases for equipment 25 hp and greater; all other locations indicated on the Plans.
   3. Thermal Compatibility with Concrete: ASTM C 884.
   4. Minimum Compressive Strength, ASTM C 579:
      a. 1 day: 6000 psi
      b. 28 days: 11000 psi
   5. Minimum Flexural Strength, ASTM C 580: 4000 psi.
   6. Minimum Tensile Strength, ASTM C 307: 2000 psi.
   7. Maximum Creep, ASTM C 1181: 4.0×10^{-3} in/in.
   8. Make all necessary provisions to maintain a minimum grout temperature of 50 degrees Fahrenheit during placement, finishing and curing.
   9. Daracem 19 Superplasticiser 12-20 oz/100 lbs cement may be substituted.
   10. The slurry form of Force 10,000 contains a significant amount of water. If used, the actual amount of water added to the mix shall be adjusted.
   11. Product manufacturer's representative shall be present for mixing and placement of grout.

C. Type G4: Waterproofing Grout
   1. Description: Polymer-modified, cementitious waterproofing grout.
   2. Application: As indicated on the Plans.
   3. Products: Subject to compliance with requirements, provide one of the products specified.
      a. Sika Corporation: SikaTop Seal 107.
      b. Or Engineer approved equal.

D. Type G5: Fast Setting Grout.
   1. Description: Fast setting, cement based patching compound.
   2. Application: As indicated on the plans.
   3. Products: Subject to compliance with requirements, provide one of the products specified.
      a. Euclid Chemical Company: Speed Crete Red Line.

b. Sika Corporation: SikaSet Mortar.
c. Or Engineer approved equal.

E. Type G6: Mass Application Grout.
1. Description: 1 part cement to 3 parts fine aggregate.
2. Application: As indicated on the plans.
3. Minimum Compressive Strength, ASTM C 579: 3000 psi at 28 days.
4. Slump, ASTM C 143: 7 inches.
5. Type G1 grout may be substituted for Type G6 grout.

2.03 RELATED MATERIALS

A. Bonding Agent: ASTM C 1059, Type II, non-redispersible, acrylic emulsion or styrene butadiene.

PART 3 EXECUTION

3.01 INSPECTION

A. Verify site conditions under provisions of Division 01 - General Requirements.

B. Inspect areas to receive grout. Do not proceed with grout work until surfaces and conditions comply with the requirements of the Engineer and/or manufacturer's written instructions.

3.02 PREPARATION

A. Prepare concrete surfaces in accordance with Engineer's and/or manufacturer's instructions.

B. Ensure concrete is a minimum of 7 days old.

C. Ensure concrete surfaces are clean and rough.

D. Provide surface preparation in accordance with grout manufacturer's requirements, or as directed by Engineer.

E. Apply a bonding agent to concrete surface as specified by grout manufacturer or as directed by Engineer.

F. Remove dirt, dust, oil, grease, debris, paint, curing compounds, sealers, and unsound concrete.

G. Saturate area to be grouted with water until uniformly damp. Remove excess water just before placing grout.

3.03 FORMS

A. Refer to Section 03 11 00.

B. Prepare forms in accordance with Engineer's and/or manufacturer's instructions.

3.04 MIXING

A. Mix grout in accordance with Engineer's and/or manufacturer's instructions.

B. Do not add water in an amount that will cause bleeding or segregation of mixed grout.

3.05 PLACEMENT

A. Place grout in accordance with Engineer's and/or manufacturer's instructions.

B. Shut down nearby equipment prior to placement. Avoid vibration for 24 hours after placement.

C. Pour and place grout from one side to eliminate air voids.

D. Grout may be rodded or tamped, but do not vibrate.

E. Use cold weather or hot weather grouting procedures in accordance with Engineer's and/or manufacturer's instructions, as temperature dictates.

F. Finish surface of grout in accordance with Engineer's and/or manufacturer's instructions.

3.06 FIELD QUALITY CONTROL

A. (RESERVED)

3.07 CURING

A. Refer to Specification Section 03 39 00.

B. Cure grout in accordance with Engineer's and/or manufacturer's instructions.

3.08 PROTECTION

A. Protect placed grout from damage during construction.

B. Protect placed grout from freezing for a minimum of 7 days.

END OF SECTION 03 60 00

CITY OF GRAIN VALLEY

WATER TOWER UPGRADE

DIVISION 5 – METALS

TABLE OF CONTENTS

SECTION	TITLE	PAGE NUMBER
05 50 00	Metal Fabrications	05 50 00 1-13
05 52 00	Metal Railings	05 52 00 1-4
05 53 00	Metal Gratings	05 53 00 1-7

PART 1 GENERAL

1.01 RELATED DOCUMENTS

A. Drawings and general provisions of the Contract, including General and Supplementary Conditions and Division 01 Specification Sections, apply to this Section.

1.02 SUMMARY

A. Section Includes:
1. Steel framing and supports for overhead doors and grilles
2. Steel framing and supports for mechanical and electrical equipment
3. Steel framing and supports for applications where framing and supports are not specified in other Sections
4. Shelf angles
5. Metal ladders
6. Ladder safety cages
7. Structural-steel door frames
8. Miscellaneous steel trim including steel angle corner guards, steel edgings, and loading-dock edge angles
9. Loose bearing and leveling plates for applications where they are not specified in other Sections
10. Aluminum Hatches

B. Products furnished, but not installed, under this Section include the following:
1. Loose steel lintels.
2. Anchor bolts, steel pipe sleeves, slotted-channel inserts, and wedge-type inserts indicated to be cast into concrete or built into unit masonry.
3. Steel weld plates and angles for casting into concrete for applications where they are not specified in other Sections.

C. Related Sections:
1. Section 01 33 00 – Submittal Procedures
2. Section 03 31 00 – Structural Concrete
3. Division 09 - Finishes
4. Section 13 21 10 – Composite Elevated Water Storage Tank

1.03 COORDINATION

A. Coordinate selection of shop primers with topcoats to be applied over them. Comply with paint and coating manufacturers' written recommendations to ensure that shop primers and topcoats are compatible with one another.

B. Coordinate installation of anchorages and steel weld plates and angles for casting into concrete. Furnish setting drawings, templates, and directions for installing anchorages, including sleeves, concrete inserts, anchor bolts, and items with integral anchors, that are to be embedded in concrete or masonry. Deliver such items to Project site in time for installation.

1.04 SUBMITTALS

A. Product Data: For the following:
   1. Nonslip aggregates and nonslip-aggregate surface finishes.
   2. Metal nosings and treads.
   3. Paint products.
   4. Grout.

B. Shop Drawings: Show fabrication and installation details for metal fabrications. Include plans, elevations, sections, and details of metal fabrications and their connections. Show anchorage and accessory items. Provide shop drawings for all fabrications listed in Part 1.

C. Delegated-Design Submittal: For fabrications indicated to comply with performance requirements and design criteria, including analysis data signed and sealed by the qualified professional engineer responsible for their preparation.

D. Mill Certificates: Signed by manufacturers of stainless-steel certifying that products furnished comply with requirements.

E. Welding certificates.

F. Paint Compatibility Certificates: From manufacturers of topcoats applied over shop primers certifying that shop primers are compatible with topcoats.

1.05 QUALITY ASSURANCE

A. Welding Qualifications: Qualify procedures and personnel according to AWS D1.1/D1.1M, "Structural Welding Code - Steel."

B. Welding Qualifications: Qualify procedures and personnel according to the following:
   1. AWS D1.1/D1.1M, "Structural Welding Code - Steel."
   2. AWS D1.2/D1.2M, "Structural Welding Code - Aluminum."
   3. AWS D1.6, "Structural Welding Code - Stainless Steel."

1.06 PROJECT CONDITIONS

A. Field Measurements: Verify actual locations of walls and other construction contiguous with metal fabrications by field measurements before fabrication.

PART 2 PRODUCTS

2.01 PERFORMANCE REQUIREMENTS

A. Delegated Design: Engage a qualified professional engineer, as defined in Section 01 45 00 “Quality Requirements,” to design ladders using performance requirements and design criteria indicated.

B. Structural Performance of Aluminum Ladders: Aluminum ladders, including landings, shall withstand the effects of loads and stresses within limits and under conditions specified in ANSI A14.3.

C. Structural Performance of Alternating Tread Devices: Alternating tread devices shall withstand the effects of loads and stresses within limits and under conditions specified in ICC's International Building Code.

D. Thermal Movements: Allow for thermal movements from ambient and surface temperature changes acting on exterior metal fabrications by preventing buckling, opening of joints, overstressing of components, failure of connections, and other detrimental effects.

1. Temperature Change: 120 deg F (67 deg C), ambient; 180 deg F (100 deg C), material surfaces.

2.02 METALS, GENERAL

A. Metal Surfaces, General: Provide materials with smooth, flat surfaces unless otherwise indicated. For metal fabrications exposed to view in the completed Work, provide materials without seam marks, roller marks, rolled trade names, or blemishes.

B. Steel Plates, Shapes, and Bars: ASTM A 36/A 36M.

C. Stainless-Steel Sheet, Strip, and Plate: ASTM A 240/A 240M or ASTM A 666, Type 304 and Type 316, as indicated.

D. Stainless-Steel Bars and Shapes: ASTM A 276, Type 304 and Type 316, as indicated.

E. Rolled-Steel Floor Plate: ASTM A 786/A 786M, rolled from plate complying with ASTM A 36/A 36M or ASTM A 283/A 283M, Grade C or D.

F. Rolled-Stainless-Steel Floor Plate: ASTM A 793.

G. Abrasive-Surface Floor Plate: Steel plate with abrasive granules rolled into surface or with abrasive material metallically bonded to steel.

1. Products: Subject to compliance with requirements, available products that may be incorporated into the Work include, but are not limited to, the following:
   a. IKG Industries, a division of Harsco Corporation; Mebac.
   b. SlipNOT Metal Safety Flooring, a W. S. Molnar company; SlipNOT.
   c. Or Engineer approved equal.

H. Steel Tubing: ASTM A 500, cold-formed steel tubing.

I. Steel Pipe: ASTM A 53/A 53M, standard weight (Schedule 40) unless otherwise indicated.

J. Cast Iron: Either gray iron, ASTM A 48/A 48M, or malleable iron, ASTM A 47/A 47M, unless otherwise indicated.

K. Aluminum Plate and Sheet: ASTM B 209 (ASTM B 209M), Alloy 6061-T6.

L. Aluminum Extrusions: ASTM B 221 (ASTM B 221M), Alloy 6063-T6.

M. Aluminum-Alloy Rolled Tread Plate: ASTM B 632/B 632M, Alloy 6061-T6.

N. Aluminum Castings: ASTM B 26/B 26M, Alloy 443.0-F.

O. Bronze Plate, Sheet, Strip, and Bars: ASTM B 36/B 36M, Alloy UNS No. C28000 (muntz metal, 60 percent copper).

P. Bronze Extrusions: ASTM B 455, Alloy UNS No. C38500 (extruded architectural bronze).

Q. Bronze Castings: ASTM B 584, Alloy UNS No. C83600 (leaded red brass) or No. C84400 (leaded semired brass).

R. Nickel Silver Extrusions: ASTM B 151/B 151M, Alloy UNS No. C74500.

S. Nickel Silver Castings: ASTM B 584, Alloy UNS No. C97600 (20 percent leaded nickel bronze).

2.03 FASTENERS

A. General: Unless otherwise indicated, provide Type 304 stainless-steel fasteners for exterior use and zinc-plated fasteners with coating complying with ASTM B 633 or ASTM F 1941 (ASTM F 1941M), Class Fe/Zn 5, at exterior walls. Select fasteners for type, grade, and class required.
   1. Provide stainless-steel fasteners for fastening aluminum.
   2. Provide stainless-steel fasteners for fastening stainless steel.
   3. Provide stainless-steel fasteners for fastening nickel silver.
   4. Provide bronze fasteners for fastening bronze.

B. Steel Bolts and Nuts: Regular hexagon-head bolts, ASTM A 307, Grade A (ASTM F 568M, Property Class 4.6); with hex nuts, ASTM A 563 (ASTM A 563M); and, where indicated, flat washers.

C. Steel Bolts and Nuts: Regular hexagon-head bolts, ASTM A 325, Type 3 (ASTM A 325M, Type 3); with hex nuts, ASTM A 563, Grade C3 (ASTM A 563M, Class 8S3); and, where indicated, flat washers.

D. Stainless-Steel Bolts and Nuts: Regular hexagon-head annealed stainless-steel bolts, ASTM F 593 (ASTM F 738M); with hex nuts, ASTM F 594 (ASTM F 836M); and, where indicated, flat washers; Alloy Group 1 (A1).

E. Anchor Bolts: ASTM F 1554, Grade 55, of dimensions indicated; with nuts, ASTM A 563; and, where indicated, flat washers.
   1. Hot-dip galvanize or provide mechanically deposited, zinc coating where item being fastened is indicated to be galvanized.

F. Anchors, General: Anchors capable of sustaining, without failure, a load equal to six times the load imposed when installed in unit masonry and four times the load imposed when installed in concrete, as determined by testing according to ASTM E 488, conducted by a qualified independent testing agency.

G. Cast-in-Place Anchors in Concrete: Either threaded type or wedge type unless otherwise indicated; galvanized ferrous castings, either ASTM A 47/A 47M malleable iron or ASTM A 27/A 27M cast steel. Provide bolts, washers, and shims as needed, all hot-dip galvanized per ASTM F 2329.

H. Post-Installed Anchors: Chemical anchors.

1. Material for Interior Locations: Carbon-steel components zinc plated to comply with ASTM B 633 or ASTM F 1941 (ASTM F 1941M), Class Fe/Zn 5, unless otherwise indicated.
2. Material for Exterior Locations and Where Stainless Steel is Indicated: Alloy Group 1 (A1) stainless-steel bolts, ASTM F 593 (ASTM F 738M), and nuts, ASTM F 594 (ASTM F 836M), unless otherwise indicated.

I. Slotted-Channel Inserts: Cold-formed, hot-dip galvanized-steel box channels (struts) complying with MFMA-4, 1-5/8 by 7/8 inches (41 by 22 mm) by length indicated with anchor straps or studs not less than 3 inches (75 mm) long at not more than 8 inches (200 mm) o.c. Provide with temporary filler and tee-head bolts, complete with washers and nuts, all zinc-plated to comply with ASTM B 633, Class Fe/Zn 5, as needed for fastening to inserts.

J. Eyebolts: ASTM A 489.

K. Machine Screws: ASME B18.6.3 (ASME B18.6.7M).

L. Lag Screws: ASME B18.2.1 (ASME B18.2.3.8M).

M. Wood Screws: Flat head, ASME B18.6.1.

N. Plain Washers: Round, ASME B18.22.1 (ASME B18.22M).

O. Lock Washers: Helical, spring type, ASME B18.21.1 (ASME B18.21.2M).

2.04 MISCELLANEOUS MATERIALS

A. Welding Rods and Bare Electrodes: Select according to AWS specifications for metal alloy welded.

B. Shop Primers: Provide primers that comply with Division 09 Painting Sections 09 91 13 and 09 91 23 and Division 09 Section 09 96 00 "High-Performance Coatings."

C. Universal Shop Primer: Fast-curing, lead- and chromate-free, universal modified-alkyd primer complying with MPI#79 and compatible with topcoat.

1. Use primer containing pigments that make it easily distinguishable from zinc-rich primer.

D. Galvanizing Repair Paint: High-zinc-dust-content paint complying with SSPC-Paint 20 and compatible with paints specified to be used over it.

E. Bituminous Paint: Cold-applied asphalt emulsion complying with ASTM D 1187.

F. Nonshrink, Metallic Grout: Factory-packaged, ferrous-aggregate grout complying with ASTM C 1107, specifically recommended by manufacturer for heavy-duty loading applications.

G. Nonshrink, Nonmetallic Grout: Factory-packaged, nonstaining, noncorrosive, nongaseous grout complying with ASTM C 1107. Provide grout specifically recommended by manufacturer for interior and exterior applications.

H. Concrete: Comply with requirements in Section 03 31 00 "Structural Concrete" for normal-weight, air-entrained, concrete with a minimum 28-day compressive strength of 4000 psi (20 MPa).

2.05 FABRICATION, GENERAL

A. Shop Assembly: Preassemble items in the shop to greatest extent possible. Disassemble units only as necessary for shipping and handling limitations. Use connections that maintain structural value of joined pieces. Clearly mark units for reassembly and coordinated installation.

B. Cut, drill, and punch metals cleanly and accurately. Remove burrs and ease edges to a radius of approximately 1/32 inch (1 mm) unless otherwise indicated. Remove sharp or rough areas on exposed surfaces.

C. Form bent-metal corners to smallest radius possible without causing grain separation or otherwise impairing work.

D. Form exposed work with accurate angles and surfaces and straight edges.

E. Weld corners and seams continuously to comply with the following:
   1. Use materials and methods that minimize distortion and develop strength and corrosion resistance of base metals.
   2. Obtain fusion without undercut or overlap.
   3. Remove welding flux immediately.
   4. At exposed connections, finish exposed welds and surfaces smooth and blended so no roughness shows after finishing and contour of welded surface matches that of adjacent surface.

F. Form exposed connections with hairline joints, flush and smooth, using concealed fasteners or welds where possible. Where exposed fasteners are required, use Phillips flat-head (countersunk) fasteners unless otherwise indicated. Locate joints where least conspicuous.

G. Fabricate seams and other connections that will be exposed to weather in a manner to exclude water. Provide weep holes where water may accumulate.

H. Cut, reinforce, drill, and tap metal fabrications as indicated to receive finish hardware, screws, and similar items.

I. Provide for anchorage of type indicated; coordinate with supporting structure. Space anchoring devices to secure metal fabrications rigidly in place and to support indicated loads.

J. Where units are indicated to be cast into concrete or built into masonry, equip with integrally welded steel strap anchors, 1/8 by 1-1/2 inches (3.2 by 38 mm), with a minimum 6-inch (150-mm) embedment and 2-inch (50-mm) hook, not less than 8 inches (200 mm) from ends and corners of units and 24 inches (600 mm) o.c., unless otherwise indicated.

2.06 MISCELLANEOUS FRAMING AND SUPPORTS

A. General: Provide steel framing and supports not specified in other Sections as needed to complete the Work.

B. Fabricate units from steel shapes, plates, and bars of welded construction unless otherwise indicated. Fabricate to sizes, shapes, and profiles indicated and as necessary to receive adjacent construction.
   1. Fabricate units from slotted channel framing where indicated.
   2. Furnish inserts for units installed after concrete is placed.

C. Galvanize miscellaneous framing and supports where indicated.

D. Prime miscellaneous framing and supports with zinc-rich primer.

2.07 SHELF ANGLES

A. Fabricate shelf angles from steel angles of sizes indicated and for attachment to concrete framing. Provide horizontally slotted holes to receive 3/4-inch (19-mm) bolts, spaced not more than 6 inches (150 mm) from ends and 24 inches (600 mm) o.c., unless otherwise indicated.
   1. Provide mitered and welded units at corners.
   2. Provide open joints in shelf angles at expansion and control joints. Make open joint approximately 2 inches (50 mm) larger than expansion or control joint.

B. For cavity walls, provide vertical channel brackets to support angles from backup masonry and concrete.

C. Galvanize shelf angles located in exterior walls.

D. Prime shelf angles located in exterior walls with zinc-rich primer.

E. Furnish wedge-type concrete inserts, complete with fasteners, to attach shelf angles to cast-in-place concrete.

2.08 METAL LADDERS

A. General:
   1. Comply with ANSI A14.3 unless otherwise indicated.

B. Steel Ladders:
   1. Space siderails 18 inches (457 mm) apart unless otherwise indicated.
   2. Siderails: Continuous, 1/2-by-2-1/2-inch (12.7-by-64-mm) steel flat bars, with eased edges.
   3. Rungs: 1-inch diameter.

4. Fit rungs in centerline of siderails; plug-weld and grind smooth on outer rail faces.
5. Provide nonslip surfaces on top of each rung, either by coating rung with aluminum-oxide granules set in epoxy-resin adhesive or by using a type of manufactured rung filled with aluminum-oxide grout.
6. Provide nonslip surfaces on top of each rung by coating with abrasive material metallically bonded to rung.
    a. Products: Subject to compliance with requirements, available products that may be incorporated into the Work include, but are not limited to, the following:
        i. IKG Industries, a division of Harsco Corporation; Mebac.
        ii. SlipNOT Metal Safety Flooring, a W. S. Molnar company; SlipNOT.
        iii. Or Engineer approved equal.
7. Provide platforms as indicated fabricated from welded or pressure-locked steel bar grating, supported by steel angles. Limit openings in gratings to no more than 1/2 inch in least dimension.
8. Support each ladder at top and bottom and not more than 60 inches (1500 mm) o.c. with welded or bolted steel brackets.
9. Galvanize ladders, including brackets and fasteners, where indicated.
10. Prime ladders, including brackets and fasteners with zinc-rich primer.

2.09 LADDER SAFETY CAGES

A. General:
1. Fabricate ladder safety cages to comply with ANSI A14.3. Assemble by welding or with stainless-steel fasteners.
2. Provide primary hoops at tops and bottoms of cages and spaced not more than 20 feet (6 m) o.c. Provide secondary intermediate hoops spaced not more than 48 inches (1200 mm) o.c. between primary hoops.
3. Fasten assembled safety cage to ladder rails and adjacent construction by welding or with stainless-steel fasteners unless otherwise indicated.

B. Steel Ladder Safety Cages:
1. Primary Hoops: 1/4-by-4-inch (6.4-by-100-mm) flat bar hoops.
2. Secondary Intermediate Hoops: 1/4-by-2-inch (6.4-by-50-mm) flat bar hoops.
3. Vertical Bars: 3/16-by-1-1/2-inch (4.8-by-38-mm) flat bars secured to each hoop.
4. Galvanize ladder safety cages, including brackets and fasteners.

2.10 STRUCTURAL-STEEL DOOR FRAMES

A. Fabricate structural-steel door frames from steel shapes, plates, and bars of size and to dimensions indicated, fully welded together, with 5/8-by-1-1/2-inch (16-by-38-mm) steel channel stops, unless otherwise indicated. Plug-weld built-up members and continuously weld exposed joints. Secure removable stops to frame with countersunk machine screws, uniformly spaced at not more than 10 inches (250 mm) o.c. Reinforce frames and drill and tap as necessary to accept finish hardware.

1. Provide with integrally welded steel strap anchors for securing door frames into adjoining concrete or masonry.

B. Extend bottom of frames to floor elevation indicated with steel angle clips welded to frames for anchoring frame to floor with expansion shields and bolts.

2.11 MISCELLANEOUS STEEL TRIM

A. Unless otherwise indicated, fabricate units from steel shapes, plates, and bars of profiles shown with continuously welded joints and smooth exposed edges. Miter corners and use concealed field splices where possible.

B. Provide cutouts, fittings, and anchorages as needed to coordinate assembly and installation with other work.

1. Provide with integrally welded steel strap anchors for embedding in concrete or masonry construction.

C. Galvanize miscellaneous steel trim.

D. Prime miscellaneous steel trim with primer specified in Division 09.

2.12 LOOSE BEARING AND LEVELING PLATES

A. Provide loose bearing and leveling plates for steel items bearing on masonry or concrete construction. Drill plates to receive anchor bolts and for grouting.

B. Galvanize plates.

2.13 LOOSE STEEL LINTELS

A. Fabricate loose steel lintels from steel angles and shapes of size indicated for openings and recesses in masonry walls and partitions at locations indicated. Fabricate in single lengths for each opening unless otherwise indicated. Weld adjoining members together to form a single unit where indicated.

B. Size loose lintels to provide bearing length at each side of openings equal to 1/12 of clear span but not less than 8 inches (200 mm) unless otherwise indicated.

C. Galvanize loose steel lintels located in exterior walls.

2.14 STEEL WELD PLATES AND ANGLES

A. Provide steel weld plates and angles not specified in other Sections, for items supported from concrete construction as needed to complete the Work. Provide

each unit with no fewer than two integrally welded steel strap anchors for embedding in concrete.

2.15 FINISHES, GENERAL

A. Comply with NAAMM's "Metal Finishes Manual for Architectural and Metal Products" for recommendations for applying and designating finishes.

B. Finish metal fabrications after assembly.

C. Finish exposed surfaces to remove tool and die marks and stretch lines, and to blend into surrounding surface.

2.16 ALUMINUM FINISHES

A. Finish designations prefixed by AA comply with the system established by the Aluminum Association for designating aluminum finishes.

B. As-Fabricated Finish: AA-M10 (Mechanical Finish: as fabricated, unspecified).

C. Class I, Clear Anodic Finish: AA-M12C22A41 (Mechanical Finish: nonspecular as fabricated; Chemical Finish: etched, medium matte; Anodic Coating: Architectural Class I, clear coating 0.018 mm or thicker) complying with AAMA 611.

2.17 ALUMINUM HATCHES

A. All access hatches shall be ¼" aluminum channel with anchor flange around the perimeter. Door leaf shall be ¼" aluminum diamond plate reinforced with aluminum stiffeners as required. The door shall open to 90 degrees and lock automatically in that position. Doors shall be built to withstand a live load indicated in the schedule below and be equipped with a snap lock and recessed hasp covered by a hinged lid flush with surface. Mill finish with bituminous coating to be applied to exterior of frame by manufacturer. Hardware shall be stainless steel. Installation shall be in accordance with manufacturer's instructions.

B. Safety grating shall be factory installed on all aluminum hatches. Grating shall be designed to support 300 pounds per square foot live load and shall be constructed of either aluminum "I" bar grating with a powder coated finish, or one piece molded fiberglass with load bearing bars in both directions. Grating shall be colored either safety orange or safety yellow. Grating shall be hinged to open in the same direction as the aluminum hatch and shall be supplied with a positive latch to maintain unit in an upright position. A padlock hasp for owner supplied padlock shall be provided. All hardware and fasters shall be stainless steel.

C. Hatches shall be provided with channel frame drain port. Where hatches are installed above areas intended to contain water (wet wells), PVC pipe shall be connected to the drain port and pipe straight down through the slab and discharge into the wet well. Where hatches are installed above areas not intended to contain water, PVC pipe shall be connected to the drain port and piped to the sump pit in the vault/manhole/below grade structure (i.e. meter vaults, dry side of the pump stations, etc.).

D. Manufacturers: Subject to compliance with requirements, available manufacturers offering products that may be incorporated into the Work include, but are not limited to, the following:
   1. Halliday Products
   2. Bilco
   3. USF Fabrication

PART 3 EXECUTION

3.01 INSTALLATION, GENERAL

A. Cutting, Fitting, and Placement: Perform cutting, drilling, and fitting required for installing metal fabrications. Set metal fabrications accurately in location, alignment, and elevation; with edges and surfaces level, plumb, true, and free of rack; and measured from established lines and levels.

B. Fit exposed connections accurately together to form hairline joints. Weld connections that are not to be left as exposed joints but cannot be shop welded because of shipping size limitations. Do not weld, cut, or abrade surfaces of exterior units that have been hot-dip galvanized after fabrication and are for bolted or screwed field connections.

C. Field Welding: Comply with the following requirements:

1. Use materials and methods that minimize distortion and develop strength and corrosion resistance of base metals.
2. Obtain fusion without undercut or overlap.
3. Remove welding flux immediately.
4. At exposed connections, finish exposed welds and surfaces smooth and blended so no roughness shows after finishing and contour of welded surface matches that of adjacent surface.

D. Fastening to In-Place Construction: Provide anchorage devices and fasteners where metal fabrications are required to be fastened to in-place construction. Provide threaded fasteners for use with concrete and masonry inserts, toggle bolts, through bolts, lag screws, wood screws, and other connectors.

E. Provide temporary bracing or anchors in formwork for items that are to be built into concrete, masonry, or similar construction.

F. Corrosion Protection: Coat concealed surfaces of aluminum that will come into contact with grout, concrete, masonry, wood, or dissimilar metals with the following:
1. Cast Aluminum: Heavy coat of bituminous paint.
2. Extruded Aluminum: Two coats of clear lacquer.

3.02 INSTALLING MISCELLANEOUS FRAMING AND SUPPORTS

A. General: Install framing and supports to comply with requirements of items being supported, including manufacturers' written instructions and requirements indicated on Shop Drawings.

B. Anchor supports for overhead doors and grilles securely to, and rigidly brace from, building structure.

C. Support steel girders on solid grouted masonry, concrete, or steel pipe columns. Secure girders with anchor bolts embedded in grouted masonry or concrete or with bolts through top plates of pipe columns.
1. Where grout space under bearing plates is indicated for girders supported on concrete or masonry, install as specified in "Installing Bearing and Leveling Plates" Article.

D. Install pipe columns on concrete footings with grouted baseplates. Position and grout column baseplates as specified in "Installing Bearing and Leveling Plates" Article.
1. Grout baseplates of columns supporting steel girders after girders are installed and leveled.

3.03 INSTALLING BEARING AND LEVELING PLATES

A. Clean concrete and masonry bearing surfaces of bond-reducing materials and roughen to improve bond to surfaces. Clean bottom surface of plates.

B. Set bearing and leveling plates on wedges, shims, or leveling nuts. After bearing members have been positioned and plumbed, tighten anchor bolts. Do not remove wedges or shims but, if protruding, cut off flush with edge of bearing plate before packing with grout.

1. Use nonshrink grout, either metallic or nonmetallic, in concealed locations where not exposed to moisture; use nonshrink, nonmetallic grout in exposed locations unless otherwise indicated.
2. Pack grout solidly between bearing surfaces and plates to ensure that no voids remain. Slope grout at 45 degree angle from bottom of plate unless otherwise indicated.

3.04 ADJUSTING AND CLEANING

A. Touchup Painting: Immediately after erection, clean field welds, bolted connections, and abraded areas. Paint uncoated and abraded areas with the same material as used for shop painting to comply with SSPC-PA 1 for touching up shop-painted surfaces.
   1. Apply by brush or spray to provide a minimum 2.0-mil (0.05-mm) dry film thickness.

B. Touchup Painting: Cleaning and touchup painting of field welds, bolted connections, and abraded areas of shop paint are specified in Division 09 Painting Sections.

C. Galvanized Surfaces: Clean field welds, bolted connections, and abraded areas and repair galvanizing to comply with ASTM A 780.

END OF SECTION 05 50 00

PART 1 GENERAL

1.01 RELATED DOCUMENTS

A. Drawings, the Construction Contract, including all Exhibits and Division 01 Specification Sections, apply to this Section.

1.02 SUMMARY

A. Section Includes:
   1. Steel pipe railings, posts, balusters and fittings

B. Related Sections:
   1. Section 05 50 00 – Metal Fabrications
   2. Division 09 – Finishes
   3. Section 13 21 10 – Composite Elevated Water Storage Tank

1.03 REFERENCE TO STANDARDS

A. ASTM A53, Grade B, Type S, Schedule 40 - Steel pipe.

B. ASTM A663 – Standard Specifications for Steel Bars.

1.04 DESIGN REQUIREMENTS

A. Comply with ASTM E985 based on the following:
   1. Testing per ASTM E894 and E935.

B. Design, fabricate and install handrails and railing systems to withstand the following structural loads without exceeding the allowable design working stress of the materials for handrails, railing systems, anchors, and connections. Apply each load to produce the maximum stress in each of the respective components comprising handrails and railing systems.
   1. Top Rail of Guardrail Systems: Capable of withstanding concentrated load of 200 lb applied at any point and in any direction and capable of withstanding a uniform load of 50 pounds per lineal foot applied horizontally at right angles to the top rail. Concentrated load shall not be assumed to act concurrently with uniform loads.
   2. Handrails Not Serving as Top Rails: Capable of withstanding concentrated load of 200 lb applied at any point and in any direction and capable of withstanding a uniform load of 50 pounds per lineal foot applied horizontally at right angles to the top rail. Concentrated and uniform loads shall not be assumed to act concurrently.
   3. Infill Area of Guardrail Systems: Capable of withstanding a horizontal concentrated load of 200 lb applied to one sq. ft. at any point in the system including panels, intermediate rails, balusters, or other elements composing

the infill area. Load shall not be assumed to act concurrently with loads on top rails of railing systems in determining stress on guard.

C. Prevent galvanic action and other forms of corrosion by insulating metals and other materials from direct contact with incompatible materials.

1.05 SUBMITTALS

A. Qualification Data: For Delegated-Design Professional Engineer.

B. Welding certificates.

C. Paint Compatibility Certificates: From manufacturers of topcoats applied over shop primers, certifying that shop primers are compatible with topcoats.

D. In addition to product data, submit following:

1. Shop drawings showing railing layout and details of components.
2. Samples of each type of metal finish indicated.
3. Test reports from independent testing laboratory evidencing compliance with ASTM E985.
4. Summary of loads imposed on the supporting structures.

1.06 QUALITY ASSURANCE

A. Welding Qualifications: Qualify procedures and personnel in accordance with the following:

1. AWS D1.1, “Structural Welding Code – Steel.”

1.07 FIELD MEASUREMENTS

A. Verify that field measurements are as indicated on Drawings.

PART 2 PRODUCTS

2.01 MANUFACTURERS

A. Manufacturers: Subject to compliance with requirements, available manufacturers offering products that may be incorporated into the Work include, but are not limited to, the following:

1. Steel Pipe and Tube Railings:
   a. Pisor Industries, Inc.
   b. Wagner, R & B, Inc.; a division of the Wagner Companies
   c. Or equal.

2.02 STEEL HANDRAIL SYSTEM

A. Source Limitations: Obtain each type of railing from single source from single manufacturer.

B. Pipe: ASTM A53, Type F or Type S, Grade A, Standard Weight (Schedule 40), unless otherwise stated in the Drawings or another grade and weight are required by structural loads.

1. Provide galvanized finish for exterior installations and where indicated.

C. Plates, Shapes, and Bars: ASTM A36

2.03 FABRICATION

A. Fit and shop assemble components in largest practical sizes, for delivery to site.

B. Fabricate components with joints tightly fitted and secured.

C. Exposed Mechanical Fastenings: Flush countersunk screws or bolts; unobtrusively located; consistent with design of component, except where specifically noted otherwise.

D. Supply components required for anchorage of fabrications. Fabricate components of same material and finish as fabrication, except where specifically noted otherwise.

E. Grind exposed joints flush and smooth with adjacent finish surface. Make exposed joints butt tight, flush, and hairline. Ease exposed edges to small uniform radius.

F. Accurately form components to suit stairs and landings to each other and to structure.

PART 3 EXECUTION

3.01 EXAMINATION

A. Verify that field conditions are acceptable and are ready to receive work.

B. Beginning of installation means erector accepts existing conditions.

3.02 PREPARATION

A. Clean steel and concrete surfaces which will be in contact with handrail post assemblies.

3.03 INSTALLATION

A. Set work accurately in location, alignment, and elevation and free from rack.

B. Provide all returns at ends of wall-mounted handrails, unless otherwise indicated. Close ends of returns unless clearance between end of the railing and wall is 1/4" or less.

C. Comply with manufacturer's recommendations for field connections of handrail and railing members.

D. Anchor posts to metal surfaces with fittings designed for this purpose.

E. Anchor rail ends to masonry and concrete with round flanges connected to rail ends and fastened to wall with post-installed anchors and bolts.

3.04 ERECTION TOLERANCES

A. Deviation from plumb, level and alignment shall not exceed 1 in 500.

3.05 REPAIR

A. Touchup Painting: Cleaning and touchup painting of field welds, bolted connections, and abraded areas of shop paint are specified in Section 09 91 13 “Exterior Painting,” 09 91 23 “ Interior Painting,” and 09 96 00 “High-Performance Coatings.”

END OF SECTION 05 52 00

PART 1 GENERAL

1.01 RELATED DOCUMENTS

A. Drawings, the Construction Contract, including all Exhibits and Division 01 Specification Sections, apply to this Section.

1.02 SUMMARY

A. Section Includes:
   1. Metal gratings.

B. Related Requirements:
   1. Section 05 52 00 – Metal Railings
   2. Division 09 – Finishes
   3. Section 13 21 10 – Composite Elevated Water Storage Tank

1.03 COORDINATION

A. Coordinate selection of shop primers with topcoats to be applied over them. Comply with paint and coating manufacturers' written instructions to ensure that shop primers and topcoats are compatible with one another.

B. Coordinate installation of anchorages for gratings, grating frames, and supports. Furnish setting drawings, templates, and directions for installing anchorages, including sleeves, concrete inserts, anchor bolts, and items with integral anchors, that are to be embedded in concrete or masonry. Deliver such items to Project site in time for installation.

1.04 SUBMITTALS

A. Product Data: For the following:
   1. Clips and anchorage devices for gratings.
   2. Paint products.
   3. Metal grating.

B. Submit shop drawings to show plans, sections, elevations, profiles, joining method, fastening details, adjacent construction interfaces, and dimensions prior to fabrication and installation. Indicate locations of openings and details of framing around openings. Contractor shall submit structural load tables for the applicable use.

C. Mill Certificates: Signed by manufacturers of stainless steel certifying that products furnished comply with requirements.

D. Welding Certificates.

E. Paint Compatibility Certificates: From manufacturers of topcoats applied over shop primers certifying that shop primers are compatible with topcoats.

F. Samples: Provide on request; sized to adequately represent the materials.

1.05 PRODUCT HANDLING

A. All materials shall be delivered in the manufacturer's original steel strapping/packaging.

B. Store materials in a dry, protected, well-vented area. Report damaged material immediately to delivering carrier and manufacturer.

1.06 QUALITY ASSURANCE

A. Welding Qualifications: Qualify procedures and personnel according to the following:
   1. AWS D1.1/D1.1M, "Structural Welding Code - Steel."
   2. AWS D1.2/D1.2M, "Structural Welding Code - Aluminum."
   3. AWS D1.6/D1.6M, "Structural Welding Code - Stainless Steel."

1.07 FIELD CONDITIONS

A. Field Measurements: Verify actual locations of walls and other construction contiguous with gratings by field measurements before fabrication.

B. Mounting surfaces shall be straight and secure; substrates of proper width.

C. Refer to construction documents, shop drawings and the manufacturer's installation instructions.

1.08 QUALIFICATIONS

A. Grating manufacturer shall have at least five (5) years documented experience in manufacturing of metal gratings.

PART 2 PRODUCTS

2.01 MANUFACTURERS:

A. Harsco.

B. McNichols.

C. Ohio Gratings, Inc.

D. Or Equal.

2.02 PERFORMANCE REQUIREMENTS:

A. Floors: Uniform load of 150 lbf/sq. ft. or concentrated load of 2000 lbf, whichever produces the greater stress.

B. Sidewalks and Vehicular Driveways, Subject to Trucking: Uniform load of 300 lbf/sq. ft. or concentrated load of 8000 lbf, whichever produces the greater stress.

C. Limit deflection to L/360 or 1/4 inch, whichever is less.

2.03 METAL BAR GRATINGS

A. Metal Bar Grating Standards: Comply with NAAMM MBG 531, "Metal Bar Grating Manual" and NAAMM MBG 532, "Heavy-Duty Metal Bar Grating Manual."

B. Welded Steel Grating:
1. Bearing Bar Spacing: 1-3/16 inches o.c. unless otherwise indicated on Drawings.
2. Bearing Bar Depth: As required to comply with structural performance requirements unless indicated on Drawings.
3. Bearing Bar Thickness: 3/16 inch minimum, or as required to comply with structural performance requirements.
4. Crossbar Spacing: 4 inches o.c.
5. Traffic Surface: Plain, unless otherwise indicated on Drawings.
6. Steel Finish: Hot-dip galvanized with a coating weight of not less than 1.8 oz./sq. ft. of coated surface.

2.04 FERROUS METALS

A. Steel Plates, Shapes, and Bars: ASTM A 36/A 36M.

B. Steel Bars for Bar Gratings: ASTM A 36/A 36M or steel strip, ASTM A 1011/A 1011M or ASTM A 1018/A 1018M.

C. Wire Rod for Bar Grating Crossbars: ASTM A 510.

D. Uncoated Steel Sheet: ASTM A 1011/A 1011M, structural steel, Grade 30.

E. Galvanized-Steel Sheet: ASTM A 653/A 653M, structural quality, Grade 33, with G90 coating.

F. Stainless-Steel Sheet, Strip, Plate, and Flat Bars: ASTM A 240/A 240M, Type 304.

G. Stainless-Steel Bars and Shapes: ASTM A 276, Type 304.

2.05 ALUMINUM

A. General: Provide alloy and temper recommended by aluminum producer for type of use indicated, with not less than the strength and durability properties of alloy, and temper designated below for each aluminum form required.

B. Extruded Bars and Shapes: ASTM B 221, alloys as follows:

1. 6061-T6 or 6063-T6, for bearing bars of gratings and shapes.
2. 6061-T1, for grating crossbars.

C. Aluminum Sheet: ASTM B 209, Alloy 5052-H32.

2.06 FASTENERS

A. General: Unless otherwise indicated, provide Type 304 stainless-steel fasteners for exterior use and zinc-plated fasteners with coating complying with ASTM B 633 or ASTM F 1941, Class Fe/Zn 5, at exterior walls. Select fasteners for type, grade, and class required.
1. Provide stainless-steel fasteners for fastening aluminum.
2. Provide stainless-steel fasteners for fastening stainless steel.

B. 6063-T6 aluminum alloy, allowing grating to be readily removable; compatible with grating type and manufacturer.

2.07 MISCELLANEOUS MATERIALS

A. Shop Primers: Provide primers that comply with Section 09 91 00 "Painting".

B. Universal Shop Primer: Fast-curing, lead- and chromate-free, universal modified-alkyd primer complying with MPI#79 and compatible with topcoat.

C. Use primer containing pigments that make it easily distinguishable from zinc-rich primer.

D. Epoxy Zinc-Rich Primer: Complying with MPI#20 and compatible with topcoat.

E. Galvanizing Repair Paint: High-zinc-dust-content paint complying with SSPC-Paint 20 and compatible with paints specified to be used over it.

F. Bituminous Paint: Cold-applied asphalt emulsion complying with ASTM D 1187/D 1187M.

2.08 FABRICATION

A. Shop Assembly: Fabricate grating sections in shop to greatest extent possible to minimize field splicing and assembly. Disassemble units only as necessary for shipping and handling limitations. Use connections that maintain structural value of joined pieces. Clearly mark units for reassembly and coordinated installation.

B. Cut, drill, and punch material cleanly and accurately. Remove burrs and ease edges to a radius of approximately 1/32 inch unless otherwise indicated. Remove sharp or rough areas on exposed surfaces.

C. Openings in grating shall be reinforced as necessary.

D. Cutouts and ends of members shall be banded to the full depth of grating.

E. Form from materials of size, thickness, and shapes indicated, but not less than that needed to support indicated loads.

F. Fit exposed connections accurately together to form hairline joints.

G. Welding: Comply with AWS recommendations and the following:
   1. Use materials and methods that minimize distortion and develop strength and corrosion resistance of base metals.
   2. Obtain fusion without undercut or overlap.
   3. Remove welding flux immediately.

H. Provide for anchorage of type indicated; coordinate with supporting structure. Fabricate and space the anchoring devices to secure gratings, frames, and supports rigidly in place and to support indicated loads.
   1. Fabricate toeplates for attaching in the field.
   2. Toeplate Height: 4 inches unless otherwise indicated.

I. Removable Grating Sections: Fabricate with banding bars attached by welding to entire perimeter of each section. Include anchors and fasteners of type indicated or, if not indicated, as recommended by manufacturer for attaching to supports.
   1. Provide no fewer than four saddle clips for each grating section containing rectangular bearing bars 3/16 inch or less in thickness and spaced 15/16 inch or more o.c., with each clip designed and fabricated to fit over two bearing bars.

J. Fabricate cutouts in grating sections for penetrations indicated. Arrange cutouts to permit grating removal without disturbing items penetrating gratings.
   1. Edge-band openings in grating that interrupt four or more bearing bars with bars of same size and material as bearing bars.

K. Do not notch bearing bars at supports to maintain elevation.

2.09 STEEL FINISHES

A. Finish gratings, frames, and supports after assembly.

B. Galvanizing: Hot-dip galvanize items as indicated to comply with ASTM A 153/A 153M for steel and iron hardware and with ASTM A 123/A 123M for other steel and iron products.
   1. Do not quench or apply post galvanizing treatments that might interfere with paint adhesion.

C. Shop prime gratings, frames, and supports not indicated to be galvanized unless otherwise indicated.
   1. Shop prime with primers specified in Section 09 91 23 " Interior Painting".

D. Preparation for Shop Priming: Prepare surfaces to comply with SSPC-SP 6/NACE No. 3, "Commercial Blast Cleaning."

E. Shop Priming: Apply shop primer to comply with SSPC-PA 1, "Paint Application Specification No. 1: Shop, Field, and Maintenance Painting of Steel," for shop painting.

PART 3 EXECUTION

3.01 INSPECTION

A. Verify that the grating installation will not disrupt other trades and verify that the substrate is dry, clean and free of foreign matter. Correct all defects prior to installation.

B. The Contractor shall verify that the substrate can support the grating before installation begins.

3.02 INSTALLATION, GENERAL

A. Install the grating and embedment angles in accordance with the project drawings, specifications, approved shop drawings, and manufacturer's installation standards.

B. Fastening to In-Place Construction: Provide anchorage devices and fasteners where necessary for securing gratings to in-place construction. Include threaded fasteners for concrete and masonry inserts, through-bolts, lag bolts, and other connectors.

C. Cutting, Fitting, and Placement: Perform cutting, drilling, and fitting required for installing gratings. Set units accurately in location, alignment, and elevation; measured from established lines and levels and free of rack.

D. Grating panels shall be fabricated to be square within manufacturer's tolerances and free from warping and any defect that may affect serviceability and reliability.

E. Install the grating with a min. 1-1/2" bearing surface at the support ends. Hardware and clips are the responsibility of the installer. Grating shall be fastened to the support substrate using grating clips supplied by the grating manufacturer with a minimum of four stainless steel saddle clips per section piece. Hardware to attach clips is the responsibility of the installer. Fastening shall be consistent with the manufacturer's instructions.

F. Tolerances between sections shall provide for not more than ¼" clearance between adjacent sections or between sections and frames. Adjacent sections shall line up to form an uninterrupted straight line, where possible. Clearance between floor plate and equipment shall be 1/2".

G. Openings shall be field cut by the installer where necessary to permit field installation of wiring, equipment, piping, etc. Where openings are provided, the grating and floor plate shall be discontinuous to allow each section of floor plate to be easily removed. All rectangular cutouts shall be made to the next bearing bar past the obstruction. Circular cutouts shall be 2" larger in diameter than the obstruction. Contractor shall be responsible for providing additional supports as required for field cut openings in grating.

H. Grating sections shall be installed to be removable unless indicated otherwise.

I. Provide temporary bracing or anchors in formwork for items that are to be built into concrete or masonry.

J. Fit exposed connections accurately together to form hairline joints.

K. Corrosion Protection: Coat concealed surfaces of aluminum that will come into contact with grout, concrete, masonry, wood, or dissimilar metals, with a heavy coat of bituminous paint.

3.03 INSTALLING METAL BAR GRATINGS

A. General: Install gratings to comply with recommendations of referenced metal bar grating standards that apply to grating types and bar sizes indicated, including installation clearances and standard anchoring details.

B. Attach removable units to supporting members with type and size of clips and fasteners indicated or, if not indicated, as recommended by grating manufacturer for type of installation conditions shown.

C. Attach nonremovable units to supporting members by welding where both materials are same; otherwise, fasten by bolting as indicated above.

3.04 ADJUSTING AND CLEANING

A. Touchup Painting: Immediately after erection, clean field welds, bolted connections, and abraded areas of shop paint and paint exposed areas with same material as used for shop painting to comply with SSPC-PA 1 requirements for touching up shop-painted surfaces.

1. Apply by brush or spray to provide a minimum 2.0-mil dry film thickness.

B. Touchup Painting: Cleaning and touchup painting of field welds, bolted connections, and abraded areas of shop paint are specified in Painting specifications.

C. Galvanized Surfaces: Clean field welds, bolted connections, and abraded areas and repair galvanizing to comply with ASTM A 780/A 780M.

3.05 IN-USE MAINTENANCE

A. Provide the Owner with the manufacturer’s maintenance instructions.

END OF SECTION 05 53 00

CITY OF GRAIN VALLEY

WATER TOWER UPGRADE

DIVISION 7 – THERMAL AND MOISTURE PROTECTION

TABLE OF CONTENTS

SECTION NUMBER	SECTION TITLE	PAGE NUMBER
07 92 00	Joint Sealants	07 92 00 1-7

PART 1 GENERAL

1.01 SUMMARY

A. This Section includes but is not limited to joint sealants for the following applications, including those specified by reference to this Section:
   1. Exterior joints in the following vertical surfaces and horizontal non-traffic surfaces:
      a. Construction joints in cast-in-place concrete.
      b. Control and expansion joints in Unit Masonry.
      c. Perimeter joints between materials listed above and frames of doors.
      d. Other joints as indicated.

   2. Exterior joints in the following horizontal traffic surfaces where indicated:
      a. Isolation and contraction joints in cast-in-place concrete slabs.
      b. Joints between different materials listed above.

   3. Interior joints in the following vertical surfaces and horizontal nontraffic surfaces:
      a. Control and expansion joints on exposed interior surfaces of exterior walls.
      b. Perimeter joints of exterior openings.
      c. Vertical joints on exposed surfaces of interior unit masonry walls and partitions.
      d. Other joints as indicated.

1.02 PERFORMANCE REQUIREMENTS

A. Provide elastomeric joint sealants that establish and maintain watertight and airtight continuous joint seals without staining or deteriorating joint substrates.

B. Provide joint sealants for interior applications that establish and maintain airtight and water-resistant continuous joint seals without staining or deteriorating joint substrates.

1.03 SUBMITTALS

A. Product Data: For each joint-sealant product indicated herein.

B. Samples for Initial Selection: Manufacturer's color charts consisting of strips of cured sealants showing the full range of colors available for each product exposed to view for approval by the Engineer.

1.04 QUALITY ASSURANCE

A. Installer Qualifications: Manufacturer's and General Contractor authorized Installer who is approved for installation of elastomeric sealants required for this project.

B. Source Limitations: Obtain each type of joint sealant through one source from a single manufacturer.

1.05 PROJECT CONDITIONS

A. Do not proceed with installation of joint sealants under the following conditions:
   1. When ambient and substrate temperature conditions are outside limits permitted by joint-sealant manufacturer or are below 40 deg. F.
   2. When joint substrates are wet.
   3. Where joint widths are less than those allowed by joint-sealant manufacturer for applications indicated.
   4. Contaminants capable of interfering with adhesion have not yet been removed from joint substrates.

PART 2 PRODUCTS

2.01 MATERIALS, GENERAL

A. Compatibility: Provide joint sealants, backings, and other related materials that are compatible with one another and with joint substrates under conditions of service and application, as demonstrated by sealant manufacturer, based on testing and field experience.

B. Colors of Exposed Joint Sealants: As selected by Engineer from manufacturer's full range.

2.02 ELASTOMERIC JOINT SEALANTS

A. Elastomeric Sealants: Comply with ASTM C 920 and other requirements indicated for each liquid-applied chemically curing sealant specified, including those referencing ASTM C 920 classifications for type, grade, class, and uses related to exposure and joint substrates.

B. Single Component Mildew-Resistant Neutral-Curing Silicone Sealant:
   1. Available Products:
      a. Pecora Corporation; 898.
      b. Tremco; Tremsil 600 White.

   2. Type and Grade: S (single component) and NS (nonsag).
   3. Class: 25.

C. Single component nonsag Urethane Sealant:

1. Available Products:
   a. Sonneborn, Division of ChemRex Inc.; NP 1.
   b. Tremco; Vulkem 227.
   c. Tremco; Dymonic.

2. Type and Grade: S (single component) and NS (nonsag).

3. Class: 25.

D. Single component Pourable Urethane Sealant:
1. Available Products:
   a. Meadows, W. R., Inc.; POURTHANE.
   b. Pecora Corporation; Urexpan NR-200.
   c. Sonneborn, Division of ChemRex Inc.; SL 1.
   d. Tremco; THC-900.

2. Type and Grade: M (multicomponent) and P (pourable).
3. Class: 25.

2.03 LATEX JOINT SEALANTS (Interior paintable surfaces)

A. Latex Sealant: Comply with ASTM C 834, Type P, Grade NF.

B. Available Products:
1. Pecora Corporation; AC-20+.
2. Sonneborn, Division of ChemRex Inc.; Sonolac.
3. Tremco; Tremflex 834.
4. Meadows, W. R., Inc

2.04 JOINT-SEALANT BACKING

A. General: Provide sealant backings of material and type that are nonstaining; are compatible with joint substrates, sealants, primers, and other joint fillers; and are approved for applications indicated by sealant manufacturer based on field experience and laboratory testing.

B. Cylindrical Sealant Backings: ASTM C 1330, Type B (bicellular material with a surface skin) and of size and density to control sealant depth and otherwise contribute to producing optimum sealant performance.

C. Bond-Breaker Tape: Polyethylene tape or other plastic tape recommended by sealant manufacturer for preventing sealant from adhering to rigid, inflexible joint-filler materials or joint surfaces at back of joint where such adhesion would result in sealant failure. Provide self-adhesive tape where applicable.

2.05 MISCELLANEOUS MATERIALS

A. Primer: Material recommended by joint-sealant manufacturer where required for adhesion of sealant to joint substrates indicated, as determined from preconstruction joint-sealant-substrate tests and field tests.

B. Cleaners for Nonporous Surfaces: Chemical cleaners acceptable to manufacturers of sealants and sealant backing materials, free of oily residues or other substances capable of staining or harming joint substrates and adjacent nonporous surfaces in any way, and formulated to promote optimum adhesion of sealants to joint substrates.

C. Masking Tape: Nonstaining, nonabsorbent material compatible with joint sealants and surfaces adjacent to joints.

PART 3 EXECUTION

3.01 EXAMINATION

A. Examine joints indicated to receive joint sealants, with Installer present, for compliance with requirements for joint configuration, installation tolerances, and other conditions affecting joint-sealant performance.

B. Proceed with installation only after unsatisfactory conditions have been corrected.

3.02 PREPARATION

A. Surface Cleaning of Joints: Clean out joints immediately before installing joint sealants to comply with joint-sealant manufacturer's written instructions and the following requirements:
   1. Remove all foreign material from joint substrates that could interfere with adhesion of joint sealant, including dust, paints (except for permanent, protective coatings tested and approved for sealant adhesion and compatibility by sealant manufacturer), old joint sealants, oil, grease, waterproofing, water repellents, water, surface dirt, and frost.
   2. Clean porous joint substrate surfaces by brushing, grinding, blast cleaning, mechanical abrading, or a combination of these methods to produce a clean, sound substrate capable of developing optimum bond with joint sealants. Remove loose particles remaining after cleaning operations above by vacuuming or blowing out joints with oil-free compressed air. Porous joint substrates include the following:
      a. Concrete.
   3. Remove laitance and form-release agents from concrete.
   4. Clean nonporous surfaces with chemical cleaners or other means that do not stain, harm substrates, or leave residues capable of interfering with adhesion of joint sealants. Nonporous joint substrates include the following:
      a. Metal.

B. Joint Priming: Prime joint substrates, where recommended in writing by joint-sealant manufacturer, based on preconstruction joint-sealant-substrate tests or prior experience. Apply primer to comply with joint-sealant manufacturer's written instructions. Confine primers to areas of joint-sealant bond; do not allow spillage or migration onto adjoining surfaces.

C. Masking Tape: Use masking tape where required to prevent contact of sealant with adjoining surfaces that otherwise would be permanently stained or damaged by such contact or by cleaning methods required to remove sealant smears. Remove tape immediately after tooling without disturbing joint seal.

3.03 INSTALLATION OF JOINT SEALANTS

A. General: Comply with joint-sealant manufacturer's written installation instructions for products and applications indicated, unless more stringent requirements apply.

B. Sealant Installation Standard: Comply with recommendations in ASTM C 1193 for use of joint sealants as applicable to materials, applications, and conditions indicated.

C. Acoustical Sealant Application Standard: Comply with recommendations in ASTM C 919 for use of joint sealants in acoustical applications as applicable to materials, applications, and conditions indicated.

D. Install sealant backings of type indicated to support sealants during application and at position required to produce cross-sectional shapes and depths of installed sealants relative to joint widths that allow optimum sealant movement capability.
   1. Do not leave gaps between ends of sealant backings.
   2. Do not stretch, twist, puncture, or tear sealant backings.
   3. Remove absorbent sealant backings that have become wet before sealant application and replace them with dry materials.

E. Install bond-breaker tape behind sealants where sealant backings are not used between sealants and backs of joints.

F. Install sealants using proven techniques that comply with the following and at the same time backings are installed:
   1. Place sealants so they directly contact and fully wet joint substrates.
   2. Completely fill recesses in each joint configuration.
   3. Produce uniform, cross-sectional shapes and depths relative to joint widths that allow optimum sealant movement capability.

G. Tooling of Nonsag Sealants: Immediately after sealant application and before skinning or curing begins, tool sealants according to requirements specified below to form smooth, uniform beads of configuration indicated; to eliminate air pockets; and to ensure contact and adhesion of sealant with sides of joint.
   1. Remove excess sealant from surfaces adjacent to joints to satisfaction of the Engineer.
   2. Use tooling agents that are approved in writing by sealant manufacturer and that do not discolor sealants or adjacent surfaces.
   3. Provide concave joint configuration per Figure 5A in ASTM C 1193, unless otherwise indicated.
      a. Use masking tape to protect surfaces adjacent to recessed tooled joints.

H. Installation of Preformed Tapes: Install according to manufacturer's written instructions.

I. Installation of Preformed Foam Sealants: Install each length of sealant immediately after removing protective wrapping, taking care not to pull or stretch material, producing seal continuity at ends, turns, and intersections of joints. For applications at low ambient temperatures where expansion of sealant requires acceleration to produce seal, apply heat to sealant in compliance with sealant manufacturer's written instructions.

3.04 CLEANING

A. Clean off excess sealant or sealant smears adjacent to joints as the Work progresses by methods and with cleaning materials approved in writing by manufacturers of joint sealants and of products in which joints occur.

3.05 PROTECTION

A. Protect joint sealants during and after curing period from contact with contaminating substances and from damage resulting from construction operations or other causes so sealants are without deterioration or damage at time of Substantial Completion. If, despite such protection, damage or deterioration occurs, cut out and remove damaged or deteriorated joint sealants immediately so installations with repaired areas are indistinguishable from original work.

3.06 JOINT-SEALANT SCHEDULE

A. Exterior vertical and horizontal non-traffic construction joints in cast-in-place concrete.
   1. Joint Sealant Single component nonsag urethane sealant.

B. Exterior horizontal nontraffic and traffic isolation and contraction joints in cast-in-place concrete slabs.
   1. Joint Sealant: Single component pourable urethane sealant.

C. Miscellaneous exterior vertical joints.
   1. Joint Sealant: Single component nonsag urethane sealant.

D. Exterior perimeter joints around frames of doors, windows and louvers.
   1. Joint Sealant: Single component nonsag urethane sealant.

E. Control and expansion joints on exposed interior surfaces of exterior walls.
   1. Joint Sealant: Single component nonsag urethane sealant.

F. Interior perimeter joints of exterior openings.
   1. Joint Sealant: Single component nonsag urethane sealant.

G. Interior expansion, control, contraction, and isolation joints in horizontal traffic surfaces.
   1. Joint Sealant: Single component pourable urethane sealant.

H. Vertical joints on exposed surfaces of interior unit masonry and concrete walls and partitions.

   1. Joint Sealant: Single component nonsag urethane.

I. Perimeter joints between interior wall surfaces and frames of interior doors, windows and elevator entrances.
   1. Joint Sealant: Latex sealant.

3.07 FINAL ACCEPTANCE OF COMPLETE WORK

A. The work shall be complete in every detail and the finished work approved by the Engineer and Owner before final acceptance.

END OF SECTION 07 92 00

CITY OF GRAIN VALLEY

WATER TOWER UPGRADE

DIVISION 8 – DOORS AND WINDOWS

TABLE OF CONTENTS

SECTION NUMBER	SECTION TITLE	PAGE NUMBER
08 11 13	Hollow Metal Doors & Frames	08 11 13 1-10
08 33 23	Overhead Coiling Doors	08 33 23 1-5
08 71 00	Door Hardware	08 71 00 1-10

PART 1 GENERAL

1.01 SUMMARY

A. Section Includes:
   1. Standard hollow metal doors, and frames.
   2. Tornado resistant steel doors and frames.

1.02 SUBMITTALS

A. Product Data: For each type of product indicated.

B. Shop Drawings: Include elevations, door edge details, frame profiles, metal thicknesses, preparations for hardware, and other details.

C. Samples for Initial Selection: For units with factory-applied color finishes.

D. Samples for Verification: For each type of exposed finish required.

E. Schedule: Prepared by or under the supervision of supplier, using same reference numbers for details and openings as those on Drawings.

1.03 QUALITY ASSURANCE

A. Fire-Rated Door Assemblies: Assemblies complying with NFPA 80 that are listed and labeled by a qualified testing agency, for fire-protection ratings indicated, based on testing at positive pressure according to NFPA 252 or UL 10B, UL 10C.

B. Fire-Rated, Borrowed-Light Frame Assemblies: Assemblies complying with NFPA 80 that are listed and labeled, by a testing and inspecting agency acceptable to authorities having jurisdiction, for fire-protection ratings indicated, based on testing according to NFPA 257 or UL 9. Label each individual glazed lite.

C. Smoke-Control Door Assemblies: Comply with NFPA 105 or UL 1784.

D. Tornado Resistant Door Assemblies: Assemblies complying with FEMA 361 requirements.

PART 2 PRODUCTS

2.01 MANUFACTURERS

A. Manufacturers: Subject to compliance with requirements, provide products by one of the following:
   1. Republic.
   2. Ceco Door Products; an Assa Abloy Group company.

3. Steelcraft; an Ingersoll-Rand company.

2.02 MATERIALS

A. Cold-Rolled Steel Sheet: ASTM A 1008/A 1008M, CS, Type B; suitable for exposed applications.

B. Hot-Rolled Steel Sheet: ASTM A 1011/A 1011M, CS, Type B.

C. Metallic-Coated Steel Sheet: ASTM A 653/A 653M, Commercial Steel (CS), Type B; with minimum G60 (Z180) or A60 (ZF180)] metallic coating.

D. Frame Anchors: ASTM A 591/A 591M, Commercial Steel (CS), 40Z (12G) coating designation; mill phosphatized.
1. For anchors built into exterior walls, steel sheet complying with ASTM A 1008/A 1008M or ASTM A 1011/A 1011M, hot-dip galvanized according to ASTM A 153/A 153M, Class B.

E. Inserts, Bolts, and Fasteners: Hot-dip galvanized according to ASTM A 153/A 153M.

F. Grout: ASTM C 476, except with a maximum slump of 4 inches (102 mm), as measured according to ASTM C 143/C 143M.

G. Mineral-Fiber Insulation: ASTM C 665, Type I.

I. Bituminous Coating: Cold-applied asphalt mastic, SSPC-Paint 12, compounded for 15-mil (0.4-mm) dry film thickness per coat.

2.03 STANDARD HOLLOW METAL DOORS

A. General: Comply with ANSI/SDI A250.8.
1. Design: Flush panel .
2. Core Construction: Manufacturer's standard kraft-paper honeycomb, polystyrene, polyurethane, polyisocyanurate, mineral-board, or vertical steel-stiffener core.
a. Fire Door Core: As required to provide fire-protection ratings indicated.
b. Thermal-Rated (Insulated) Doors: R-value of not less than 6 deg F x h x sq. ft./Btu (1.057 K x sq. m/W) when tested according to ASTM C 1363.
3. Vertical Edges for Single-Acting Doors: Square edge.
4. Top and Bottom Edges: Closed with flush or inverted 0.042-inch- (1.0-mm-) thick, end closures or channels of same material as face sheets.
5. Tolerances: SDI 117, "Manufacturing Tolerances for Standard Steel Doors and Frames."

B. Exterior Doors: Face sheets fabricated from metallic-coated steel sheet. Comply with ANSI/SDI A250.8 for level and model and ANSI/SDI A250.4 for physical performance level:

1. Level 3 and Physical Performance Level A (Extra Heavy Duty), Model 1 (Full Flush). Insulated.

C. Hardware Reinforcement: ANSI/SDI A250.6.

2.04 STANDARD HOLLOW METAL FRAMES

A. General: Comply with ANSI/SDI A250.8.

B. Exterior and Interior Frames: Fabricated from metallic-coated steel sheet.
1. Fabricate frames with mitered or coped corners.
2. Fabricate frames as full profile welded unless otherwise indicated.
3. Frames for Borrowed Lights: Same as adjacent door frame.

C. Hardware Reinforcement: ANSI/SDI A250.6.

2.05 TORNADO RESISTANT STEEL DOORS

A. General
1. Work Included Supply of:
a. Single door/frame units as large as 3’6” x 7’0”. In all instances, the doors and frames shall be supplied with hinges, gasketing and latches which shall form an integral part of the tested unit.

2. Supply Only of the Door, Door Frame and Hardware Unit
a. Tornado Resistant Steel Frames.
b. Tornado Resistant Steel Doors.
c. Hinges and Latching Device (preinstalled) for Swinging Doors.

3. Requirements of Regulatory Agencies
a. Install fire labeled steel door and frame products in accordance with NFPA-80, current edition, except where otherwise specified.
b. Doors and frames to be tested in accordance with FEMA #361 “Design and Construction Guidance for Community Shelters” most current edition. As part of the submittal process the manufacturer of the door/frame units shall submit independent test data from a recognized, licensed laboratory indicating compliance with the standards of this test as specified by the project architect or engineer.

4. Warranty
    a. Material and workmanship shall be warranted by the manufacturer for a period of five (5) years from the date of supply. Warranty shall apply to replacement of retrofit of product only.

B. Products
1. Materials
    a. Steel
        i. Commercial grade, zinc coated steel to ASTM A653.
        ii. Structural Steel Channel to conform with ASTM A36.
        iii. Structural Steel Plate to conform with ASTM A569.

    b. Door Core Materials – Tornado Resistant core shall be manufacturer's proprietary standard.
    c. Primers: Rust inhibitive touch-up only.

2. Fabrication – Door Frame Products
    a. Frames and doors shall be manufacturer's proprietary standard, tested as part of a fully operable assembly, including door, frame, gasketing and locking hardware in accordance with FEMA #361 "Design and Construction Guidance for Community Shelters", most current edition, as specified by the project architect or engineer.
    b. Frames and doors shall be blanked, reinforced, drilled and tapped for mortised, template hardware.
    c. Frames and doors shall be reinforced, where required, for surface mounted hardware. Drilling and tapping shall be by others.
    d. Provide factory-applied, touchup primer at areas where zinc coating has been removed during fabrication.

3. Fabrication – Frames, Welded Type
    a. Frame product shall be accurately mitered and securely welded on the inside of the profile.
    b. Welded joints shall be ground to a smooth, uniform finish.
    c. Floor anchors shall be securely attached to the inside of each jamb profile.
    d. Weld in two (2) temporary jamb spreaders per frame to maintain proper alignment during shipment.
    e. Provide for appropriate anchorage to floor and wall construction. Quantities, types and locations of wall anchorage shall be as per manufacturer's proprietary design.

4. Fabrication – Doors
    a. Doors shall be swing type and shall be flush, with provision for tornado resistant glass as indicated on schedules.
    b. Longitudinal edges shall be seamless.
    c. Top and bottom of doors shall be provided with inverted, recessed channels spot welded to door faces. Structural steel channels shall be welded flush to the top and bottom of the door.

5. Pre-Installation of Swinging Door Hardware
    a. Hinges and latching device to be supplied complete with door and frame in conformance with tornado resistant requirements of project.
    b. Hinges and latching device shall be factory pre-installed on the frame/door unit.

C. Execution
1. Site Storage and Protection of Materials
    a. All materials shall be thoroughly inspected upon receipt and all discrepancies, deficiencies and/or damage shall be immediately reported in writing to the supplier.

2. Installation
    a. Set frames plumb, square, level and at correct elevation.
    b. Make allowance for deflection to ensure structural loads are not transmitted to frame product.
    c. Install doors and hardware in accordance with hardware templates and manufacturer's instructions.
    d. Adjust factory pre-installed hardware as well as all other operable parts for correct clearance and functions.

2.06 FRAME ANCHORS

A. Jamb Anchors:
1. Masonry Type: Adjustable strap-and-stirrup or T-shaped anchors to suit frame size, not less than 0.042 inch (1.0 mm) thick, with corrugated or perforated straps not less than 2 inches (50 mm) wide by 10 inches (250 mm) long; or wire anchors not less than 0.177 inch (4.5 mm) thick.
2. Stud-Wall Type: Designed to engage stud, welded to back of frames; not less than 0.042 inch (1.0 mm) thick.
3. Compression Type for Drywall Slip-on Frames: Adjustable compression anchors.
4. Postinstalled Expansion Type for In-Place Concrete or Masonry: Minimum 3/8-inch- (9.5-mm-) diameter bolts with expansion shields or inserts. Provide pipe spacer from frame to wall, with throat reinforcement plate, welded to frame at each anchor location.

B. Floor Anchors: Formed from same material as frames, not less than 0.042 inch (1.0 mm) thick, and as follows:
1. Monolithic Concrete Slabs: Clip-type anchors, with two holes to receive fasteners.
2. Separate Topping Concrete Slabs: Adjustable-type anchors with extension clips, allowing not less than 2-inch (50-mm) height adjustment. Terminate bottom of frames at finish floor surface.

2.07 HOLLOW METAL PANELS

A. Provide hollow metal panels of same materials, construction, and finish as specified for adjoining hollow metal work.

2.08 STOPS AND MOLDINGS

A. Moldings for Glazed Lites in Doors: Minimum 0.032 inch (0.8 mm) thick, same material as door face sheet.

B. Fixed Frame Moldings: Formed integral with hollow metal frames, a minimum of 5/8 inch (16 mm) high unless otherwise indicated.

C. Loose Stops for Glazed Lites in Frames: Minimum 0.032 inch (0.8 mm) thick, same material as frames.

D. Terminated Stops: Where indicated, terminate stops 6 inches (152 mm) above finish floor with a 90-degree angle cut, and close open end of stop with steel sheet closure. Cover opening in extension of frame with welded-steel filler plate, with welds ground smooth and flush with frame.

2.09 ACCESSORIES

A. Mullions and Transom Bars: Join to adjacent members by welding or rigid mechanical anchors.

B. Ceiling Struts: Minimum 1/4-inch-thick by 1-inch- (6.4-mm-thick by 25.4-mm-) wide steel.

C. Grout Guards: Formed from same material as frames, not less than 0.016 inch (0.4 mm) thick.

2.10 FABRICATION

A. Tolerances: Fabricate hollow metal work to tolerances indicated in SDI 117.

B. Hollow Metal Doors:
   1. Exterior Doors: Provide weep-hole openings in bottom of exterior doors. Seal joints in top edges of doors against water penetration.
   2. Glazed Lites: Factory cut openings in doors.
   3. Astragals: Provide overlapping astragal on one leaf of pairs of doors where required by NFPA 80 for fire-performance rating or where indicated.

C. Hollow Metal Frames: Where frames are fabricated in sections, provide alignment plates or angles at each joint, fabricated of same thickness metal as frames.
   1. Welded Frames: Weld flush face joints continuously; grind, fill, dress, and make smooth, flush, and invisible.
   2. Sidelight and Transom Bar Frames: Provide closed tubular members with no visible face seams or joints, fabricated from same material as door frame. Fasten members at crossings and to jambs by butt welding.
   3. Provide countersunk, flat- or oval-head exposed screws and bolts for exposed fasteners unless otherwise indicated.
   4. Grout Guards: Weld guards to frame at back of hardware mortises in frames to be grouted.
   5. Floor Anchors: Weld anchors to bottom of jambs and mullions with at least four spot welds per anchor.
   6. Jamb Anchors: Provide number and spacing of anchors as follows:
      a. Masonry Type: Locate anchors not more than 18 inches (457 mm) from top and bottom of frame. Space anchors not more than 32 inches (813 mm) o.c. and as follows:
         i. Two anchors per jamb up to 60 inches (1524 mm) high.
         ii. Three anchors per jamb from 60 to 90 inches (1524 to 2286 mm) high.
         iii. Four anchors per jamb from 90 to 120 inches (2286 to 3048 mm) high.
         iv. Four anchors per jamb plus 1 additional anchor per jamb for each 24 inches (610 mm) or fraction thereof above 120 inches (3048 mm) high.

      b. Stud-Wall Type: Locate anchors not more than 18 inches (457 mm) from top and bottom of frame. Space anchors not more than 32 inches (813 mm) o.c. and as follows:
         i. Three anchors per jamb up to 60 inches (1524 mm) high.
         ii. Four anchors per jamb from 60 to 90 inches (1524 to 2286 mm) high.
         iii. Five anchors per jamb from 90 to 96 inches (2286 to 2438 mm) high.
         iv. Five anchors per jamb plus 1 additional anchor per jamb for each 24 inches (610 mm) or fraction thereof above 96 inches (2438 mm) high.
         v. Two anchors per head for frames more than 42 inches (1066 mm) wide and mounted in metal-stud partitions.

      c. Compression Type: Not less than two anchors in each jamb.
      d. Postinstalled Expansion Type: Locate anchors not more than 6 inches (152 mm) from top and bottom of frame. Space anchors not more than 26 inches (660 mm) o.c.

D. Hardware Preparation: Factory prepare hollow metal work to receive templated mortised hardware according to the Door Hardware Schedule and templates furnished as specified in Division 08 Section "Door Hardware."
   1. Locate hardware as indicated, or if not indicated, according to ANSI/SDI A250.8.

2. Reinforce doors and frames to receive nontemplated, mortised and surface-mounted door hardware.
3. Comply with applicable requirements in ANSI/SDI A250.6 and ANSI/DHI A115 Series specifications for preparation of hollow metal work for hardware.
4. Coordinate locations of conduit and wiring boxes for electrical connections with Division 26 electrical Sections.

E. Stops and Moldings: Provide stops and moldings around glazed lites where indicated. Form corners of stops and moldings with butted or mitered hairline joints.
1. Single Glazed Lites: Provide fixed stops and moldings welded on secure side of hollow metal work.
2. Multiple Glazed Lites: Provide fixed and removable stops and moldings so that each glazed lite is capable of being removed independently.
3. Provide fixed frame moldings on outside of exterior and on secure side of interior doors and frames.
4. Provide loose stops and moldings on inside of hollow metal work.
5. Coordinate rabbet width between fixed and removable stops with type of glazing and type of installation indicated.

2.11 STEEL FINISHES

A. Prime Finish: Apply manufacturer's standard primer immediately after cleaning and pretreating.
1. Shop Primer: ANSI/SDI A250.10.

B. Field finish paint.
1. Color and Gloss: As selected by Architect.

PART 3 EXECUTION

3.01 INSTALLATION

A. Hollow Metal Frames: Comply with ANSI/SDI A250.11.
1. Set frames accurately in position, plumbed, aligned, and braced securely until permanent anchors are set. After wall construction is complete, remove temporary braces, leaving surfaces smooth and undamaged.
a. At fire-protection-rated openings, install frames according to NFPA 80.
b. Where frames are fabricated in sections because of shipping or handling limitations, field splice at approved locations by welding face joint continuously; grind, fill, dress, and make splice smooth, flush, and invisible on exposed faces.
c. Install frames with removable glazing stops located on secure side of opening.
d. Install door silencers in frames before grouting.
e. Remove temporary braces necessary for installation only after frames have been properly set and secured.

f. Check plumbness, squareness, and twist of frames as walls are constructed. Shim as necessary to comply with installation tolerances.
g. Field apply bituminous coating to backs of frames that are filled with grout containing antifreezing agents.

2. Floor Anchors: Provide floor anchors for each jamb and mullion that extends to floor, and secure with postinstalled expansion anchors.
   a. Floor anchors may be set with powder-actuated fasteners instead of postinstalled expansion anchors if so indicated and approved on Shop Drawings.

3. Metal-Stud Partitions: Solidly pack mineral-fiber insulation behind frames.
4. Masonry Walls: Coordinate installation of frames to allow for solidly filling space between frames and masonry with grout.
5. Concrete Walls: Solidly fill space between frames and concrete with grout. Take precautions, including bracing frames, to ensure that frames are not deformed or damaged by grout forces.
6. In-Place Concrete or Masonry Construction: Secure frames in place with postinstalled expansion anchors. Countersink anchors, and fill and make smooth, flush, and invisible on exposed faces.
7. In-Place Gypsum Board Partitions: Secure frames in place with postinstalled expansion anchors through floor anchors at each jamb. Countersink anchors, and fill and make smooth, flush, and invisible on exposed faces.
8. Ceiling Struts: Extend struts vertically from top of frame at each jamb to overhead structural supports or substrates above frame unless frame is anchored to masonry or to other structural support at each jamb. Bend top of struts to provide flush contact for securing to supporting construction. Provide adjustable wedged or bolted anchorage to frame jamb members.
9. Installation Tolerances: Adjust hollow metal door frames for squareness, alignment, twist, and plumb to the following tolerances:
   a. Squareness: Plus or minus 1/16 inch (1.6 mm), measured at door rabbet on a line 90 degrees from jamb perpendicular to frame head.
   b. Alignment: Plus or minus 1/16 inch (1.6 mm), measured at jambs on a horizontal line parallel to plane of wall.
   c. Twist: Plus or minus 1/16 inch (1.6 mm), measured at opposite face corners of jambs on parallel lines, and perpendicular to plane of wall.
   d. Plumbness: Plus or minus 1/16 inch (1.6 mm), measured at jambs at floor.

B. Hollow Metal Doors: Fit hollow metal doors accurately in frames, within clearances specified below. Shim as necessary.
   1. Non-Fire-Rated Standard Steel Doors:
      a. Jambs and Head: 1/8 inch (3 mm) plus or minus 1/16 inch (1.6 mm).
      b. Between Edges of Pairs of Doors: 1/8 inch (3 mm) plus or minus 1/16 inch (1.6 mm).

c. Between Bottom of Door and Top of Threshold: Maximum 3/8 inch (9.5 mm).
d. Between Bottom of Door and Top of Finish Floor (No Threshold): Maximum 3/4 inch (19 mm).

2. Fire-Rated Doors: Install doors with clearances according to NFPA 80.
3. Smoke-Control Doors: Install doors according to NFPA 105.

3.02 ADJUSTING AND CLEANING

A. Final Adjustments: Check and readjust operating hardware items immediately before final inspection. Leave work in complete and proper operating condition. Remove and replace defective work, including hollow metal work that is warped, bowed, or otherwise unacceptable.

B. Prime-Coat Touchup: Immediately after erection, sand smooth rusted or damaged areas of prime coat and apply touchup of compatible air-drying, rust-inhibitive primer.

C. Metallic-Coated Surfaces: Clean abraded areas and repair with galvanizing repair paint according to manufacturer's written instructions.

END OF SECTION 08 11 13

PART 1 GENERAL

1.01 SUMMARY

A. Section includes:
   1. Insulated service doors.

B. Related Section:
   1. Section 05 50 00 – Metal Fabrications
   2. Section 13 21 10 – Composite Elevated Water Storage Tank

1.02 PERFORMANCE REQUIREMENTS

A. Structural Performance, Exterior Doors: Exterior overhead coiling doors shall withstand the wind loads, the effects of gravity loads, and loads and stresses within limits and under conditions indicated according to SEI/ASCE 7.
   1. Wind Loads: Uniform pressure (velocity pressure) of 20 lbf/sq. ft. (960 Pa), acting inward and outward.

B. Seismic Performance: Overhead coiling doors shall withstand the effects of earthquake motions determined according to SEI/ASCE 7.

1.03 SUBMITTALS

A. Product Data: For each type and size of overhead coiling door and accessory.

B. Shop Drawings: For each installation and for special components not dimensioned or detailed in manufacturer's product data. Include plans, elevations, sections, details, and attachments to other work.
   1. Detail equipment assemblies and indicate dimensions, weights, loads, required clearances, method of field assembly, components, and location and size of each field connection.
   2. Show locations of replaceable fusible links.
   3. Wiring Diagrams: For power, signal, and control wiring.

C. Samples: For each exposed product and for each color and texture specified.

D. Seismic Qualification Certificates: For overhead coiling doors**,** accessories, and components, from manufacturer.

E. Oversize Construction Certification: For door assemblies required to be fire-rated and that exceed size limitations of labeled assemblies.

F. Maintenance Data.

1.04 QUALITY ASSURANCE

A. Installer Qualifications: Manufacturer's authorized representative who is trained and approved for both installation and maintenance of units required for this Project.

B. Electrical Components, Devices, and Accessories: Listed and labeled as defined in NFPA 70, by a qualified testing agency, and marked for intended location and application.

PART 2 PRODUCTS

2.01 DOOR CURTAIN MATERIALS AND CONSTRUCTION

A. Door Curtains: Fabricate overhead coiling-door curtain of interlocking metal slats, designed to withstand wind loading indicated, in a continuous length for width of door without splices. Unless otherwise indicated, provide slats of thickness and mechanical properties recommended by door manufacturer for performance, size, and type of door indicated, and as follows:
   1. Insulation: Fill slats for insulated doors with manufacturer's standard thermal insulation complying with maximum flame-spread and smoke-developed indexes of 75 and 450, respectively, according to ASTM E 84. Enclose insulation completely within slat faces.

B. Bottom Bar for Service Doors: Consisting of two angles, each not less than 1-1/2 by 1-1/2 by 1/8 inch (38 by 38 by 3 mm) thick; fabricated from metal to match curtain slats and finish.

C. Curtain Jamb Guides: Manufacturer's standard angles or channels and angles of same material and finish as curtain slats unless otherwise indicated, with sufficient depth and strength to retain curtain, to allow curtain to operate smoothly, and to withstand loading. Slot bolt holes for guide adjustment. Provide removable stops on guides to prevent overtravel of curtain.

2.02 HOOD

A. General: Form sheet metal hood to entirely enclose coiled curtain and operating mechanism at opening head. Contour to fit end brackets to which hood is attached. Roll and reinforce top and bottom edges for stiffness. Form closed ends for surface-mounted hoods and fascia for any portion of between-jamb mounting that projects beyond wall face. Equip hood with intermediate support brackets as required to prevent sagging.
   1. Exterior-Mounted Doors: Fabricate hood to act as weather protection and with a perimeter sealant-joint-bead profile for applying joint sealant.

2.03 LOCKING DEVICES

A. Locking Device Assembly: Fabricate with cylinder lock, spring-loaded dead bolt, operating handle, cam plate, and adjustable locking bars to engage through slots in tracks.
   1. Lock Cylinders: Provide cylinders standard with manufacturer and keyed to building keying system.
   2. Keys: Provide Two for each cylinder.

B. Safety Interlock Switch: Equip power-operated doors with safety interlock switch to disengage power supply when door is locked.

2.04 CURTAIN ACCESSORIES

A. Weatherseals: Equip each exterior door with weather-stripping gaskets fitted to entire perimeter of door for a weathertight installation, unless otherwise indicated.

B. Push/Pull Handles: Equip each push-up-operated or emergency-operated door with lifting handles on each side of door, finished to match door. Provide pull-down straps or pole hooks for doors more than 84 inches (2130 mm) high.

2.05 COUNTERBALANCING MECHANISM

A. General: Counterbalance doors by means of manufacturer's standard mechanism with an adjustable-tension, steel helical torsion spring mounted around a steel shaft and contained in a spring barrel connected to top of curtain with barrel rings. Use grease-sealed bearings or self-lubricating graphite bearings for rotating members.

B. Brackets: Manufacturer's standard mounting brackets of either cast iron or cold-rolled steel plate.

2.06 MANUAL DOOR OPERATORS

A. Equip door with manufacturer's recommended manual door operator unless another type of door operator is indicated.

B. Push-up Door Operation: Design counterbalance mechanism so required lift or pull for door operation does not exceed 25 lbf (111 N).

C. Chain-Hoist Operator: Consisting of endless steel hand chain, chain-pocket wheel and guard, and gear-reduction unit with a maximum 30 lbf (133 N) force for door operation. Provide alloy-steel hand chain with chain holder secured to operator guide.

2.08 DOOR ASSEMBLY

A. Insulated Service Door: Overhead coiling door formed with curtain of interlocking metal slats.
   1. Manufacturers: Subject to compliance with requirements, provide products by one of the following:

a. ACME Rolling Doors.
b. Alpine Overhead Doors, Inc.
c. AlumaTek, Inc.
d. C.H.I. Overhead Doors.
e. City-Gates.
f. Cookson Company.
g. Cornell Iron Works, Inc.
h. Dynamic Closures Corp.
i. Lawrence Roll-Up Doors, Inc.
j. Mahon Door Corporation.
k. McKeon Rolling Steel Door Company, Inc.
l. Metro Door.
m. Overead Door Corporation.
n. QMI Security Solutions.
o. Raynor.
p. Southwestern Steel Rolling Door Co.
q. Wayne-Dalton Corp.
r. Windsor Door.

B. Operation Cycles: Not less than 10,000.

C. Fire Rating: As shown on drawings.

D. Curtain R-Value: 6.0 deg F x h x sq. ft./Btu (1.057 K x sq. m/W.

E. Door Curtain Material: Steel.

F. Door Curtain Slats: Flat profile slats of 1-7/8-inch (48-mm) or 2-5/8-inch (67-mm) center-to-center height.
1. Insulated-Slat Interior Facing: Metal.

G. Curtain Jamb Guides: Aluminum with exposed finish matching curtain slats. Provide continuous integral wear strips to prevent metal-to-metal contact and to minimize operational noise.

H. Hood: Aluminum.
1. Shape: Square.
2. Mounting: Face of wall.

I. Locking Devices: Equip door with locking device assembly and chain lock keeper.
1. Locking Device Assembly: Cremone type, both jamb sides locking bars, operable from inside and outside with cylinders.

J. Manual Door Operator: Chain-hoist operator.

K. Electric Door Operator:
1. Usage Classification: Standard duty, up to 60 cycles per hour.
2. Motor Exposure: Exterior, wet, and humid.
3. Emergency Manual Operation: Push-up type.
4. Obstruction-Detection Device: Automatic photoelectric sensor.

L. Door Finish:
   1. Steel.
   2. Interior Curtain-Slat Facing: Match finish of exterior curtain-slat face.

M. Door Bottom Bar:
   1. Clear anodized aluminum

PART 3 EXECUTION

3.01 INSTALLATION

A. Install overhead coiling doors and operating equipment complete with necessary hardware, anchors, inserts, hangers, and equipment supports; according to manufacturer's written instructions and as specified.

B. Fire-Rated Doors: Install according to NFPA 80.

C. Smoke-Control Doors: Install according to NFPA 80 and NFPA 105.

D. Adjust hardware and moving parts to function smoothly so that doors operate easily, free of warp, twist, or distortion. Lubricate bearings and sliding parts as recommended by manufacturer. Adjust seals to provide weathertight fit around entire perimeter.

3.02 DEMONSTRATION

A. Engage a factory-authorized service representative to train Owner's maintenance personnel to adjust, operate, and maintain overhead coiling doors.

END OF SECTION 08 33 23

PART 1 GENERAL

1.01 SUMMARY

A. This Section includes the following:
   1. Commercial door hardware
   2. Cylinders for doors specified in other Sections

B. Related Sections
   1. Section 08 11 13 - Hollow Metal Doors and Frames
   2. Section 13 21 10 - Composite Elevated Water Storage Tank
   3. DIVISION 26 - Electrical

1.02 SUBMITTALS

A. Product Data: For each type of product indicated.

B. Shop Drawings: Details of electrified door hardware, including wiring diagrams.

C. Samples: For each exposed finish.

D. Other Action Submittals:
   1. Door Hardware Sets: Prepared by or under the supervision of Installer, detailing fabrication and assembly of door hardware, as well as procedures and diagrams.
      a. Format: Use same scheduling sequence and format and use same door numbers as in the Contract Documents.
      b. Content: Include the following information:
         i. Identification number, location, hand, fire rating, and material of each door and frame.
         ii. Type, style, function, size, quantity, and finish of each door hardware item. Include description and function of each lockset and exit device.
         iii. Complete designations of every item required for each door or opening including name and manufacturer.

   2. Keying Schedule: Prepared by or under the supervision of Installer, detailing Owner's final keying instructions for locks.

1.03 QUALITY ASSURANCE

A. Installer Qualifications: An employer of workers trained and approved by lock manufacturer.

1. Installer's responsibilities include supplying and installing door hardware and providing a qualified Architectural Hardware Consultant available during the course of the Work to consult with Contractor, Architect, and Owner about door hardware and keying.

B. Architectural Hardware Consultant Qualifications: A person who is currently certified by DHI as an Architectural Hardware Consultant and who is experienced in providing consulting services for door hardware installations that are comparable in material, design, and extent to that indicated for this Project.

C. Fire-Rated Door Assemblies: Assemblies complying with NFPA 80 that are listed and labeled by a testing and inspecting agency acceptable to authorities having jurisdiction, for fire ratings indicated, based on testing according to NFPA 252.

D. Keying Conference: Conduct conference at Project site. Incorporate keying conference decisions into final keying schedule after reviewing door hardware keying system.

1.04 DELIVERY, STORAGE, AND HANDLING

A. Deliver keys to manufacturer of key control system for subsequent delivery to Owner.

1.05 COORDINATION

A. Templates: Distribute door hardware templates for doors, frames, and other work specified to be factory prepared for installing door hardware. Check Shop Drawings of other work to confirm that adequate provisions are made for locating and installing door hardware to comply with indicated requirements.

B. Coordination of Tornado Resistant Door Hardware: Coordinate the door hardware to be supplied with Tornado Resistant Door as part of a tested opening. Hardware shall closely match specified hardware for other doors.

1.06 WARRANTY

A. Special Warranty: Manufacturer's standard form in which manufacturer agrees to repair or replace components of door hardware that fail in materials or workmanship within specified warranty period.
1. Warranty Period: Three years from date of Substantial Completion.

1.07 COORDINATION OF SECURITY ACCESS HARDWARE

A. General
1. Contractor shall coordinate the Security Access Hardware with the Steel Door and Frames supplier, Architectural Hardware Consultant / Supplier, Aluminum-Framed Storefronts provider and the Access Control Hardware provider as specified in Division 26.

2. Rework to the Steel Doors and Frames necessary to accommodate security access hardware as a result of failure to coordinate the work shall be at contractor's own expense.

PART 2 PRODUCTS

2.01 SCHEDULED DOOR HARDWARE

A. General: Provide door hardware for each door to comply with requirements in this Section.
   1. Door Hardware Sets: Provide quantity, item, size, finish or color indicated, and products equivalent in function and comparable in quality to named products.

2.02 HINGES, GENERAL

A. Template Requirements: Except for hinges and pivots to be installed entirely (both leaves) into wood doors and frames, provide only template-produced units.

B. Hinge Base Metal: Unless otherwise indicated, provide the following:
   1. Exterior Hinges: Stainless steel, with stainless-steel pin.
   2. Interior Hinges: Steel, with steel pin.
   3. Hinges for Fire-Rated Assemblies: Stainless steel, with stainless-steel pin.
   4. Electrified Hinges: Stainless steel, conceal wiring in frame.

C. Nonremovable Pins: Provide set screw in hinge barrel that, when tightened into a groove in hinge pin, prevents removal of pin while door is closed; for outswinging exterior doors.

D. Fasteners: Comply with the following:
   1. Machine Screws: For metal doors and frames. Install into drilled and tapped holes.
   2. Wood Screws: For wood doors and frames.
   3. Threaded-to-the-Head Wood Screws: For fire-rated wood doors.
   4. Screws: Phillips flat-head; machine screws (drilled and tapped holes) for metal doors. Finish screw heads to match surface of hinges.

2.03 HINGES

A. Butts and Hinges: BHMA A156.1.

B. Basis of Design: Hager Companies (HAG)
   1. (HI-1) BB1191 4.5 x 4.5 (NRP).
   2. (HI-2) BB1279 4.5 x 4.5.
   3. (HI-3) ETW 4.5 x 4.5

C. Subject to compliance with requirements, other available manufacturers are as follows:
   1. Baldwin Hardware Corporation (BH).
   2. Bommer Industries, Inc. (BI).
   3. Cal-Royal Products, Inc. (CRP).
   4. Lawrence Brothers, Inc. (LB).
   5. McKinney Products Company; an ASSA ABLOY Group company (MCK).
   6. PBB, Inc. (PBB).
   7. Stanley Commercial Hardware; Div. of The Stanley Works (STH).

2.04 LOCKS AND LATCHES, GENERAL

A. Accessibility Requirements: Provide operating devices that do not require tight grasping, pinching, or twisting of the wrist and that operate with a force of not more than 5 lbf (22 N).

B. Latches and Locks for Means of Egress Doors: Comply with NFPA 101. Latches shall not require more than 15 lbf (67 N) to release the latch. Locks shall not require use of a key, tool, or special knowledge for operation.

C. Lock Trim/Levers:
   1. Product: (LO-1) Best 9K Series, Heavy Duty, US 26D Finish.
   2. Lever: 16C

D. Lock Throw: Comply with testing requirements for length of bolts required for labeled fire doors.

E. Backset: 2-3/4 inches (70 mm), unless otherwise indicated.

F. Strikes: Manufacturer's standard strike with strike box for each latchbolt or lock bolt, with curved lip extended to protect frame, finished to match door hardware set.

2.05 MECHANICAL LOCKS AND LATCHES

A. Lock Functions: Function numbers and descriptions indicated in door hardware sets comply with the following:
   1. Bored Locks: BHMA A156.2.

B. Bored Locks: BHMA A156.2**,** Grade 1 Series 4000.
   1. Product: Best (no substitutes)

2.06 ELECTRIC STRIKES

A. Product: (ES-1) Securitron “The Unlatch”, FSUNL -12 (Fail Safe)

B. Ensure compatibility with all other hardware.

2.07 EXIT DEVICES

A. Exit Devices: BHMA A156.3**,** Grade 1.

B. Accessibility Requirements: Provide operating devices that do not require tight grasping, pinching, or twisting of the wrist and that operate with a force of not more than 5 lbf (22 N).

C. Exit Devices for Means of Egress Doors: Comply with NFPA 101. Exit devices shall not require more than 15 lbf (67 N) to release the latch. Locks shall not require use of a key, tool, or special knowledge for operation.

D. Panic Exit Devices: Listed and labeled by a testing and inspecting agency acceptable to authorities having jurisdiction, for panic protection, based on testing according to UL 305.

E. Fire Exit Devices: Devices complying with NFPA 80 that are listed and labeled by a testing and inspecting agency acceptable to authorities having jurisdiction, for fire and panic protection, based on testing according to UL 305 and NFPA 252.

F. Outside Trim: Lever with cylinder, material and finish to match locksets, unless otherwise indicated.
   1. Match design for locksets and latchsets, unless otherwise indicated.

G. Through Bolts: For exit devices and trim on metal doors.

H. Manufacturer and Products:
   1. Von Duprin, Inc. 98 Series, US26D Finish.
      a. (ED-1) 9848 with E996 L Electrified Trim
      b. (ED-2) 9848 with 996 L Trim
      c. (ED-3) 98 Rim with E996 L Electrified Trim
      d. (ED-4) 98 Rim

   2. Subject to compliance with requirements, other available manufacturers are as follows:
      a. DORMA Architectural Hardware; Member of The DORMA Group North America (DAH).
      b. Monarch Exit Devices & Door Hardware; an Ingersoll-Rand Company (MON).

2.08 LOCK CYLINDERS

A. Standard Lock Cylinders by Best meeting BHMA A156.5**,** Grade 1.

B. Cylinders: Manufacturer's standard tumbler type, constructed from brass or bronze, stainless steel, or nickel silver, and complying with the following:
   1. Number of Pins**:** seven.

C. Cores: Best Cores provided by Ameren.

2.09 KEYING

A. Keying System: Factory registered, complying with guidelines in BHMA A156.28, Appendix A. Incorporate decisions made in keying conference into master key system.
   1. Existing System: Master key or grand master key locks to Owner's existing system.

B. Keys: Nickel silver permanently inscribed with a visual key control number and including the notation "DO NOT DUPLICATE."
   1. Quantity: In addition to one extra key blank for each lock, provide three cylinder change keys and five master keys.

2.10 CLOSERS

A. Accessibility Requirements: Comply with the following maximum opening-force requirements:
   1. Interior, Non-Fire-Rated Hinged Doors: 5 lbf (22.2 N) applied perpendicular to door.
   2. Sliding or Folding Doors: 5 lbf (22.2 N) applied parallel to door at latch.
   3. Fire Doors: Minimum opening force allowable by authorities having jurisdiction.

B. Door Closers for Means of Egress Doors: Comply with NFPA 101. Door closers shall not require more than 30 lbf (133 N) to set door in motion and not more than 15 lbf (67 N) to open door to minimum required width.

C. Size of Units: Unless otherwise indicated, comply with manufacturer's written recommendations for size of door closers depending on size of door, exposure to weather, and anticipated frequency of use. Provide factory-sized closers, adjustable to meet field conditions and requirements for opening force.

D. Surface Closers: BHMA A156.4**,** Grade 1. Provide type of arm required for closer to be located on non-public side of door, unless otherwise indicated. Provide drop plate, as required.
   1. Manufacturers:
      a. LCN 4000 Series, Aluminum Finish (no substitutes)
         i. (CL - 1) 4040XP.

2.11 PROTECTIVE TRIM UNITS

A. Size: 1-1/2 inches (38 mm) less than door width on push side and 1/2 inch (13 mm) less than door width on pull side, by 12” height.

B. Metal Protective Trim Units: BHMA A156.6; beveled top and 2 sides; fabricated from the following material:
   1. Material: 0.050-inch- (1.3-mm-) thick stainless steel.
   2. Manufacturers:
      a. Basis of Design: Hager Companies, US32D Finish.

i. (KP-1) 194S 10 x 34

b. Subject to compliance with requirements, other manufacturers are as follows:
   i. American Floor Products Co., Inc. (AFP).
   ii. Baldwin Hardware Corporation (BH).
   iii. Burns Manufacturing Incorporated (BM).
   iv. Don-Jo Mfg., Inc. (DJO).
   v. Hiawatha, Inc. (HIA).
   vi. IPC Door and Wall Protection Systems, Inc.; Div. of InPro Corporation (IPC).
   vii. IVES Hardware; an Ingersoll-Rand Company (IVS).
   viii. Pawling Corporation (PAW).
   ix. Rockwood Manufacturing Company (RM).
   x. Trimco (TBM).

2.12 STOPS AND HOLDERS

A. Stops and Bumpers: BHMA A156.16**,** Grade 1.
   1. Provide floor stops for doors unless wall or other type stops are scheduled or indicated. Do not mount floor stops where they will impede traffic. Where floor or wall stops are not appropriate, provide overhead holders.

B. Provide silencers for all Door Frames: BHMA A156.16, Grade 1; neoprene or rubber; fabricated for drilled-in application to frame.

C. Manufacturers:
   1. Basis of Design: Hager Companies, US26D.
      a. (ST-1) 234W.

   2. Subject to compliance with requirements, other manufacturers are as follows:
      a. Architectural Builders Hardware Mfg., Inc. (ABH).
      b. Baldwin Hardware Corporation (BH).
      c. Burns Manufacturing Incorporated (BM).
      d. Cal-Royal Products, Inc. (CRP).
      e. Don-Jo Mfg., Inc. (DJO).
      f. Door Controls International (DCI).
      g. DORMA Architectural Hardware; Member of The DORMA Group North America (DAH).
      h. Glynn-Johnson; an Ingersoll-Rand Company (GJ).
      i. HES, Inc.; an ASSA ABLOY Group company (HES).
      j. Hiawatha, Inc. (HIA).
      k. IVES Hardware; an Ingersoll-Rand Company (IVS).
      l. Rixson Specialty Door Controls; an ASSA ABLOY Group company (RIX).
      m. Rockwood Manufacturing Company (RM).
      n. SARGENT Manufacturing Company; an ASSA ABLOY Group company (SGT).

o. Stanley Commercial Hardware; Div. of The Stanley Works (STH).
p. Trimco (TBM).

2.13 DOOR GASKETING

A. Standard: BHMA A156.22.

B. General: Provide continuous weather-strip gasketing on exterior doors and provide smoke, light, or sound gasketing on interior doors where indicated or scheduled. Provide noncorrosive fasteners for exterior applications and elsewhere as indicated.
1. Perimeter Gasketing: Apply to head and jamb, forming seal between door and frame.
2. Meeting Stile Gasketing: Fasten to meeting stiles, forming seal when doors are closed.
3. Door Bottoms: Apply to bottom of door, forming seal with threshold when door is closed.

C. Smoke-Labeled Gasketing: Assemblies complying with NFPA 105 that are listed and labeled by a testing and inspecting agency acceptable to authorities having jurisdiction, for smoke-control ratings indicated, based on testing according to UL 1784.
1. Provide smoke-labeled gasketing on 20-minute-rated doors and on smoke-labeled doors.

D. Sound-Rated Gasketing: Assemblies that are listed and labeled by a testing and inspecting agency, for sound ratings indicated, based on testing according to ASTM E 1408.

E. Replaceable Seal Strips: Provide only those units where resilient or flexible seal strips are easily replaceable and readily available from stocks maintained by manufacturer.

F. Gasketing Materials: ASTM D 2000 and AAMA 701/702.

G. Manufacturers
1. Basis of Design: Hager Companies.
a. (GA-1) 8915/72 x 84.
b. (GA-2) 8025-84 set.
c. (GA-3) 8915/36 x 84.
d. (SW-1) 7505-36.

2. Subject to compliance with requirements, other manufacturers are as follows:
a. M-D Building Products, Inc. (MD).
b. National Guard Products (NGP).
c. Pemko Manufacturing Co. (PEM).
d. Reese Enterprises (RE).
e. Sealeze; a unit of Jason Incorporated (SEL).
f. Zero International (ZRO).

2.14 THRESHOLDS

A. Standard: BHMA A156.21.

B. Accessibility Requirements: Bevel raised thresholds with a slope of not more than 1:2. Provide thresholds not more than 1/2 inch (13 mm) high.

C. Thresholds for Means of Egress Doors: Comply with NFPA 101. Maximum 1/2 inch (13 mm) high.

D. Manufacturers
   1. Basis of Design: Hager Companies, Mill Finish.
      a. (TH-1) 412S-72.
      b. (TH-2) 412S-36.

   2. Subject to compliance with requirements, other manufacturers are as follows:
      a. M-D Building Products, Inc. (MD).
      b. National Guard Products (NGP).
      c. Pemko Manufacturing Co. (PEM).
      d. Reese Enterprises (RE).
      e. Rixson Specialty Door Controls; an ASSA ABLOY Group company (RIX).
      f. Sealeze; a unit of Jason Incorporated (SEL).
      g. Zero International (ZRO).

2.15 FABRICATION

A. Base Metals: Produce door hardware units of base metal, fabricated by forming method indicated, using manufacturer's standard metal alloy, composition, temper, and hardness. Furnish metals of a quality equal to or greater than that of specified door hardware units and BHMA A156.18. Do not furnish manufacturer's standard materials or forming methods if different from specified standard.

B. Fasteners: Provide screws according to commercially recognized industry standards for application intended, except aluminum fasteners are not permitted. Provide Phillips flat-head screws with finished heads to match surface of door hardware, unless otherwise indicated.
   1. Comply with NFPA 80 for fasteners of door hardware in fire-rated applications.

C. Finishes: All metallic hardware to have US26D or US32D finish.

PART 3 EXECUTION

3.01 INSTALLATION

A. Steel Doors and Frames: Comply with DHI A115 Series. Drill and tap doors and frames for surface-applied door hardware according to ANSI A250.6.

B. Mounting Heights: Mount door hardware units at heights indicated as follows unless otherwise indicated or required to comply with governing regulations.

1. Standard Steel Doors and Frames: DHI's "Recommended Locations for Architectural Hardware for Standard Steel Doors and Frames."

C. Install each door hardware item to comply with manufacturer's written instructions. Where cutting and fitting are required to install door hardware onto or into surfaces that are later to be painted or finished in another way, coordinate removal, storage, and reinstallation of surface protective trim units with finishing work specified in Division 09 Sections. Do not install surface-mounted items until finishes have been completed on substrates involved.

D. Thresholds: Set thresholds for exterior and acoustical doors in full bed of sealant complying with requirements specified in Division 07 Section "Joint Sealants."

E. Adjustment: Adjust and check each operating item of door hardware and each door to ensure proper operation or function of every unit. Replace units that cannot be adjusted to operate as intended. Adjust door control devices to compensate for final operation of heating and ventilating equipment and to comply with referenced accessibility requirements.

1. Door Closers: Unless otherwise required by authorities having jurisdiction, adjust sweep period so that, from an open position of 70 degrees, the door will take at least 3 seconds to move to a point 3 inches (75 mm) from the latch, measured to the leading edge of the door.

END OF SECTION 08 71 00

CITY OF GRAIN VALLEY

WATER TOWER UPGRADE

DIVISION 9 – FINISHES

TABLE OF CONTENTS

SECTION NUMBER	SECTION TITLE	PAGE NUMBER
09 96 00	High Performance Coatings	09 96 00 1-25

DIVISION 9 – FINISHES
Section 09 96 00 – High Performance Coatings

PART 1 GENERAL

1.01 SUMMARY

A. Section includes the requirements for field surface preparation and painting associated with high-performance coatings.

B. The work covered in this section includes furnishing all materials, labor and equipment for full interior and exterior surface preparation and coating system on the Water Tower Upgrade project.

C. Related Sections:
   1. Section 01 33 00 - Submittals
   2. Section 01 43 50 – Manufacturer's Service.
   3. Section 01 60 00 – Product Requirements.
   4. Division 02 through 48 Specifications for specific coating system requirements.

D. All submerged or wetted surfaces and components in contact with potable water shall be coated with NSF 61 approved coating products.

1.02 REFERENCES

A. SSPC Surface Preparation and Paint Application Specifications as published by the Society of Protective Coatings (now part of the Association for Materials Protection and Performance (AMPP).

B. NAPF 500-03, Surface Preparation Standard for Ductile Iron Pipe and Fittings Receiving Special External Coatings and/or Special Internal Linings, as published by the National Association of Pipe Fabricators.

C. International Concrete Repair Institute (ICRI) 310.2 Selecting and Specifying Concrete Surface Preparation for Sealers, Coatings, and Polymer Overlays (formerly No. 03732).

D. AWWA D102 – Coating Steel Water Storage Tanks. Provide NSF 61 Certified coating products for wetted and submerged surfaces and components to meet Drinking Water Standards.

1.03 GENERAL

A. Perform all cleaning, surface preparation, and coating application in accordance with this specification section, the specifications of the Society of Protective Coatings (SSPC) and in accordance with the recommendations of the coating manufacturer.

B. The coating manufacturer shall make available a qualified factory representative to instruct the Contractor's coating applicators in the recommended cleaning, blasting and application procedures to ensure that the coatings conform to the coating manufacturer's recommendations and the contract specifications.

C. For all other coatings (steel, copper, plastic, etc.), provide products of one coating manufacturer.

D. Contractor shall coordinate selection of coating manufacturers with equipment suppliers, shop and field coating applicators to conform to this specification. Contractor shall execute purchase orders to reflect coating manufacturer identified in the Contractor's Bid.

1.04 DEFINITIONS

A. "Paint" as used herein means all coating systems, materials, including primers, emulsions, enamels, stains, sealers and fillers and other applied materials whether used as prime, intermediate or finish coat.

B. "Wetted Surfaces" refers to surfaces in direct contact with water, or exposed to vapors from water during routine operation.

C. "Non-wetted Surfaces" refers to surfaces not in direct contact with water and not exposed to vapors from water during routine operation.

D. "Interior" refers to surfaces inside structures or enclosed within structures.

E. "Exterior" refers to surfaces that are outside structures and exposed to the elements.

F. "Buried Interior" refers to interior surfaces below grade.

G. "Buried Exterior" refers to exterior surfaces below grade.

H. "Inside/Submerged" refers to surfaces in direct contact with water and/or the inside surface of piping, channel, or other structure.

I. "Outside/Non-Submerged" refers to surfaces not in contact with water and/or the outside surface of piping, channel, or other structure.

1.05 ABBREVIATIONS

A. The following abbreviations are used within this section and elsewhere in the Contract Documents in reference to products specified under this Section:

1. MDFT: Minimum Dry Film Thickness (mils)
2. MDFTPC: Minimum Dry Film Thickness per coat (mils)
3. MIL: Thousandths of an Inch
4. MS-P: Military Specification - Paint
5. NACE: National Association of Corrosion Engineers International
6. PSDS: Paint System Data Sheet
7. SFPG: Square Feet Per Gallon
8. SFPGPC: Square Feet Per Gallon Per Coat
9. SP: Surface Preparation
10. SSPC: Society for Protective Coatings
11. DISP: Cast Iron and Ductile Iron Surface Preparation as described in this section.

1.06 SUBMITTALS

A. Submittals shall be made in accordance with Section 01 33 00, Submittal Procedures. In addition, the following information shall be provided.

B. Product Data Sheets:
   1. For each coating system used herein, furnish a Paint System Data Sheet (PSDS), Technical Data Sheets, and coating colors available (where applicable) for each product used in the coating system. A PSDS form is located at the end of this section.
   2. Submit required information on a system-by-system basis.
   3. Submit evidence that the coating manufacturer's application recommendations, have been distributed to all subcontractors and independent coating applicators who will apply coatings for work covered under this Contract (Indiscriminate submittal of manufacturer's literature only is not acceptable).

C. Submit coating manufacturer’s certification that zinc-rich coatings, if supplied, are lead-free.

D. Submit coating manufacturer's written instructions for applying each type of coating prior to application.

E. Submit a list of references substantiating the requirement for applicator's experience as specified.

F. Submit a document describing Contractor’s surface preparation and coating application quality control procedure and system. This requirement also applies to all subcontractors and independent coating applicators who will apply coatings for work covered under this contract.

G. Factory Applied Coatings: Submit buyout manufacturer's certification stating that factory applied prime and finish coating systems meet or exceed requirements specified herein. If factory applied shop prime coatings, on buyout items, differ from the herein specified coating manufacturer, for items to be field finish painted, the buyout manufacturers' must provide written confirmation that the coating materials are compatible.

H. Submit a surface preparation and coating application schedule outlining the sequence of work and estimated time required for each item. This shall also include approximate square footage of the surface areas involved with each item.

I. Upon completion of the work, certification from the coating manufacturer indicating that the quantity of each coating purchased was sufficient to properly coat all surfaces. Such certification shall make reference to the square footage figures provided to the coating manufacturer and to the Engineer by the Contractor.

1.07 MANUFACTURER'S QUALIFICATION

A. The coating manufacturer and coating application subcontractor shall have been engaged in the supply of high-performance coatings and application of coatings to steel structures, respectively, each for a five (5) year minimum.

B. The contractor shall require the coating application subcontractor to provide a list of previous experience, and that list shall be submitted to the Engineer. The list shall also indicate previous experience of the proposed job foreman. The coating application subcontractor and job foreman shall have no less than five (5) years of experience of painting potable water storage and/or treatment facilities.

1.08 QUALITY ASSURANCE

A. A system of quality control is required of the coating manufacturer to assure and to document that the coatings are manufactured to the standards and specifications specified in the contract documents.

B. A system of quality control is required for the Contractor to assure and to document that the cleaning, blasting and application of all coatings have been made in accordance with the coating manufacturer's recommendations and conditions specified herein.

C. Within 35 calendar days after the Contractor has received the Notice to Proceed, arrange a Pre-painting conference with a technical representative of the paint manufacturer, the Engineer, the Contractor, and the Owner to: Review the paint systems to be used, select any colors, review painting procedures, and establish a painting schedule.

1.09 DELIVERY, STORAGE, AND HANDLING

A. Coatings are to be delivered to the Contractor, all subcontractors and independent applicators in the original sealed, unopened, dated and labeled containers of the coating manufacturer. At the time of use, the designated name, date of manufacture, color, and name of the coating manufacturer shall plainly show and shall be subject to the inspection of the Engineer or designated representative.

B. Labels on each container shall provide the following information as a minimum:
   1. Name or title of material.
   2. Federal Specification number, if applicable.
   3. Manufacturer’s stock number.
   4. Manufacturer’s name.
   5. Contents by volume, for major pigment and vehicle constituents.
   6. Thinning instructions.
   7. Application instructions.

C. Store coatings in a suitable protected area that is heated or cooled as required to maintain temperatures above 50°F and within the range recommended by the coating manufacturer.

D. Shipping:
   1. Where precoated items are to be shipped to the jobsite, protect coating from damage. Batten coated items to prevent abrasion.
   2. Use nonmetallic or padded slings and straps in handling.
   3. Items will be rejected for excessive damage.

1.10 WARRANTY

A. The bid shall be construed to contain a warranty from the Contractor for a period of 1 year from the date of acceptance for all materials and workmanship.

B. Furnish manufacturers standard for coatings and linings.

C. Any work proving defective within one year from the date of acceptance or at the anniversary inspection shall be redone without any additional expense to the Owner for labor or materials.

1.11 REGULATORY REQUIREMENTS

A. All of the Contractor's activities and equipment used on the jobsite shall be in compliance with Federal, State and Local law. Defective or substandard equipment shall not be used. Hoists, ladder, and electrical equipment, scaffolding, hand or powered tools must meet all safety standards.

B. All coatings shall be in compliance with MDNR's Air Pollution Control Program.

1.12 COORDINATION

A. Contractor shall disinfect and be present for the filling of the new water tower with Owner and Engineer.

PART 2 PRODUCTS

2.01 COATINGS MANUFACTURERS

A. Coatings specified in this section shall be manufactured by:
   1. Tnemec Company, Inc.; Kansas City, Missouri.
   2. The Sherwin-Williams Company; Cleveland, Ohio.
   3. Substitutions for specified coating manufacturer shall have been submitted during the bidding process using *Document 00 43 25 – Proposed Product Substitutions* to be considered by Owner and Engineer.

2.02 COATING MATERIALS

A. Manufacturer's color charts shall be submitted to the owner at least 30 days prior to paint application. The contractor shall coordinate work so as to allow sufficient time for paint to be delivered to jobsite.

B. Products shall meet federal, state, and local requirements limiting the emission of volatile organic compounds (VOC's). Specific information may be secured through the local office of the Air Pollution Control Officer.

C. Materials Including Primer and Finish Coats: Produced by same coating manufacturer.

D. Thinners, Cleaners, Driers, and Other Additives: Only as recommended by coating manufacturer of the particular coating and shown on the PSDS supplied by the coating manufacturer.

E. Coating products are listed in the following schedules. The Item Code letter designation will be the paint identification code used in the Coatings Schedule. Low temperature products shall be used in accordance with manufacturer's recommendations and ambient conditions during application and curing.

2.03 APPLICATION SCHEDULE

A. Pipe, fittings, valves, pipe supports, and other appurtenances and equipment.
   1. Do not field paint instruments, meters, valve actuators, motors, sheaves, shafts, and adjusting screws at packing glands, belt drives, etc.
   2. Shop surface preparation shall be SSPC SP-10 abrasive blast with angular media and 1.5 to 2.0 mil profile for steel surfaces.
   3. Shop surface preparation shall be in accordance with NAPF 500-03-04 for ductile iron pipe and NAPF 500-03-05 for ductile iron fittings.
   4. Shop prime shall be compatible with field painting:
      a. Tnemec Series 94-H20 at 2.5-3.5 mils MDFT.
      b. Sherwin Williams Corothane I Galvapac at 2.5 to 3.5 mils MDFT.
   5. Surfaces with shop surface preparation and prime coats that do not conform to the requirements listed above for shop-applied prime coat shall be considered to have a non-compatible prime coat. Pumps, heat exchangers, and other process equipment with manufacturer's standard coating or coating as specified elsewhere that does not conform to the requirements listed above for shop-applied prime coat shall be considered to have a non-compatible prime coat.
   6. Field surface preparation shall be:
      a. SSPC SP-1, Solvent Cleaning, to remove all surface contamination including all traces of asphaltic pipe and fitting coatings and residue.
      b. SSPC SP-2, Hand Tool Cleaning, and SSPC SP-3, Power Tool Cleaning, for areas of damaged prime coat less than 5 square inches to remove all but tightly adherent prime coat.
      c. SSPC SP-11, Power Tool Cleaning to Bare Metal, for removal of areas of damaged prime coat larger than 5 square inches and all areas of rust-contaminated substrate.
      d. Additional field surface preparation for surfaces with non-compatible prime coat shall include scuff sanding to remove surface gloss and chalking and to develop an anchor profile.
   7. Field Prime Coat for surfaces with specified shop prime coat shall be touch-up and spot priming with one of the following:
      a. Tnemec Series 94-H20 at 2.5-3.5 mils MDFT.
      b. Sherwin Williams Corothane I Galvapac at 2.5 to 3.5 mils MDFT.
   8. Field Prime Coat for surfaces with non-compatible prime coat shall be a tie-coat, touch-up and spot priming with one of the following:
      a. Tnemec Series 91-H20 at 2.5-3.5 mils MDFT.
      b. Sherwin Williams Macropoxy 646 FC Epoxy at 3.0 to 5.0 mils MDFT.

9. Field Intermediate Coat shall be:
    a. Tnemec Series N140 Pota-Pox Plus at 3.0 to 5.0 mils MDFT.
    b. Sherwin Williams Macropoxy 646 FC Epoxy at 3.0 to 5.0 mils MDFT.
10. Field Finish Coat for non-wetted interior and exterior surfaces shall be:
    a. Tnemec Series 1095 Endura-Shield at 2.0 to 3.0 mils MDFT.
    b. Sherwin Williams Hi-Solids Polyurethane at 2.0 to 3.0 mils MDFT.
    c. Sherwin Williams Acrolon Ultra at 2.0 to 3.0 mils DFT.
11. Field Finish Coat for wetted and submerged surfaces shall be:
    a. Tnemec Series 21 Epoxoline at 4.0 to 6.0 mils MDFT.
    b. Sherwin Williams Macropoxy 5500 LT Epoxy at 4.0 to 6.0 mils MDFT.
12. Note that application method may require additional coats to achieve the specified dry film thickness.
13. Note that color of second field coat shall be coordinated with color of third field coat.

B. Existing pipe, fittings, valves, pipe supports, and other appurtenances.
    1. Field surface preparation shall be
        a. SSPC SP-1, Solvent Cleaning, to remove all surface contamination including all traces of asphaltic pipe and fitting coatings and residue.
        b. SSPC SP-2, Hand Tool Cleaning, and SSPC SP-3, Power Tool Cleaning, for areas of damaged coatings less than 5 square inches to remove all but tightly adherent coatings.
        c. SSPC SP-11, Power Tool Cleaning to Bare Metal, for removal of areas of damaged coatings larger than 5 square inches and all areas of rust-contaminated substrate.
        d. Scuff sanding to remove surface gloss and chalking and to develop an anchor profile.
    2. Field Prime Coat shall be a tie-coat, touch-up and spot priming with one of the following:
        a. Tnemec Series 91-H20 at 2.5-3.5 mils MDFT.
        b. Sherwin Williams Dura-Plate 235 at 3.0 to 5.0 mils MDFT.
    3. Subsequent field coats shall be as specified for new work with same surface and service.

C. Structural steel, miscellaneous steel fabrications (including interior of steel access tube), and miscellaneous steel components and fasteners – wetted and submerged surfaces.
    1. Field surface preparation shall be SSPC SP-10 abrasive blast with angular media to provide a 1.5 to 2.0 mil profile.
    2. Field Prime Coat shall be:
        a. Tnemec Series 94-H20 at 2.5-3.5 mils MDFT.
        b. Sherwin Williams Corothane I Galvapac at 2.5 to 3.5 mils MDFT.
    3. Field Intermediate Coat shall be:
        a. Tnemec Series N140 Pota-Pox Plus at 4.0 to 6.0 mils MDFT.
        b. Sherwin Williams Macropoxy 5500LT at 4.0 to 6.0 mils MDFT.

4. Field Finish Coat shall be:
    a. Tnemec Series Series 21 Epoxoline at 4.0 to 6.0 mils MDFT.
    b. Sherwin Williams Macropoxy 5500LT at 4.0 to 6.0 mils MDFT.
5. Note that application method may require additional coats to achieve the specified dry film thickness.

D. Structural steel, miscellaneous steel fabrications, and miscellaneous steel components and fasteners at exterior areas and interior areas with equipment, and piping.
    1. Field surface preparation shall be
        a. SSPC SP-1, Solvent Cleaning, to remove all surface.
        b. SSPC SP-2, Hand Tool Cleaning, and SSPC SP-3, Power Tool Cleaning, for areas of damaged coatings less than 5 square inches to remove all but tightly adherent coatings.
        c. SSPC SP-11, Power Tool Cleaning to Bare Metal, for removal of areas of damaged coatings larger than 5 square inches and all areas of rust-contaminated substrate.
        d. Scuff sanding to remove surface gloss and chalking and to develop an anchor profile.
    2. Field Prime Coat shall be a tie-coat, touch-up and spot priming with one of the following:
        a. Tnemec Series 91-H20 at 2.5-3.5 mils MDFT.
        b. Sherwin Williams Corothane I Galvapac at 2.0 to 3.0 mils MDFT.
    3. Field Intermediate Coat shall be:
        a. Tnemec Series N69 Hi-Build Epoxoline at 3.0 to 5.0 mils MDFT.
        b. Sherwin Williams Dura-Plate 235 at 3.0 to 5.0 mils MDFT.
    4. Field Finish Coat for interior non-wetted service shall be:
        a. Tnemec Series N69 Hi-Build Epoxoline at 3.0 to 5.0 mils MDFT.
        b. Sherwin Williams Dura-Plate 235 at 3.0 to 5.0 mils MDFT.
    5. Field Finish Coat for exterior non-wetted service shall be:
        a. Tnemec Series 1095 Endura-Shield at 2.0 to 3.0 mils MDFT.
        b. Sherwin Williams Hi-Solids Polyurethane at 3.0 to 5.0 mils MDFT.
        c. Sherwin Williams Acrolon 218 HS at 3.0 to 5.0 mils MDFT.
    6. Note that application method may require additional coats to achieve the specified dry film thickness.

E. Structural and miscellaneous steel – Hot Dip Galvanized
    1. In general, galvanized surfaces are not required to be painted except for touch-up, miscellaneous piping and pipe support components, or as specifically indicated otherwise on the drawings. Touch-up painting is required for all galvanized surfaces to repair all damage to galvanized surfaces. Touch-up painting shall also be provided for non-painted, non-galvanized, ancillary components of galvanized steel assemblies.
    2. Where touch-up painting of galvanized surfaces is required, thoroughly abrade surface to be coated with a new, clean wire brush or power tool to remove any zinc salts or other contaminants that may have formed per SSPC-SP11 or SSPC-SP16 as recommended by the coating manufacturer. Clean surface with industrial solvent to remove dirt, dust, grease, oils, and loose zinc slat per SSPC-SP-1,

Solvent Cleaning. Prime all areas devoid of galvanizing with one coat of ZRC Compound, overlapping at least 2 inches over existing galvanizing. Coating for galvanized surfaces shall be Z.R.C. Cold Galvanizing Compound, Sherwin Williams Zinc Clad Cold Galvanizing, or equal.

3. Galvanized fasteners and other miscellaneous components of piping and pipe support systems shall be field painted in accordance with the paint system scheduled for the piping or pipe support and the following surface preparation and priming requirements. Wash off oil, grease, and dirt by solvent cleaning in accordance with SSPS SP-1 or water-based alkaline cleaner recommended by the coatings manufacturer. Remove zinc ash residue by washing with a 1 to 2 percent ammonia solution. Phosphate wash/etch the surface with an acidic zinc phosphate solution, mordent solution, T-Wash, GalvaPrep, or equal. Do not over etch galvanized surface. Thoroughly rinse and dry surface after each treatment. Prior to application of the intermediate coat, prime galvanized surfaces with Tnemec Series 91-H20 at 2.5-3.5 mils MDFT or Sherwin-Williams Dura-Plate 235 at 3.0-5.0 mils MDFT.
4. Prepare galvanized surfaces requiring field touch-up according to ASTM D 6386-99 Standard Practice for Preparation of Zinc (Hot Dipped Galvanized) Coated Iron and Steel Product and Hardware Surfaces for Painting.

F. Piping to be painted for Identification/Color Code Only
   1. Unless noted otherwise PVC, CPVC, HDPE, stainless steel, aluminum, and copper piping shall be painted for the purpose of color coding and identification alone. The color coding can be paint or colored vinyl tape applied in a 12-inch wide field spaced a maximum of four feet with a centered, 2-inch wide band. Paint system shall be:
      a. Prime coat of Tnemec Series 91-H20 at 2.5-3.5 mils MDFT or Sherwin-Williams Dura-Plate 235 at 3.0-5.0 mils MDFT.
      b. Intermediate coat of Tnemec Series 1095 Endura-Shield at 2.0 to 3.0 mils MDFT; Sherwin-Williams Hi-Solids Polyurethane at 2.0 to 3.0 mils MDFT; or Sherwin-Williams Acrolon 218 HS at 2.20 to 3.0 mils MDFT.
      c. Topcoat of Tnemec Series 1075 Endura-Shield II at 2.0 to 3.0 mils MDFT; Sherwin-Williams Hi-Solids Polyurethane at 2.0 to 3.0 mils MDFT; or Sherwin-Williams Acrolon 218 HS at 2.20 to 3.0 mils MDFT.
      d. Color band of two (2) additional coats of Tnemec Series 1095 Endura-Shield at 2.0 to 3.0 mils MDFT; Sherwin-Williams Hi-Solids Polyurethane at 2.0 to 3.0 mils MDFT; or Sherwin-Williams Acrolon 218 HS at 2.20 to 3.0 mils MDFT.
      e. Colors shall be as specified below.

G. Surfaces not to be painted
   1. Unless noted otherwise instruments, flowmeters, motors, electric actuators for valves & gates, stainless steel equipment & structures, aluminum equipment and structures, solenoid valves, handrail, grating, and electrical conduit & enclosures shall receive manufacturer's shop coatings as specified elsewhere and not receive a field paint system.

2.04 COLORS

A. Finish coat color shall be determined at least 30 day prior to paint application in accordance with Section 2.02 Coating Materials. Wetted and submerged surfaces shall be gray.

B. Formulate with colorants free of lead, lead compounds, or other materials which might be affected by presence of chlorine or other gas likely to be present at the project.

C. Proprietary identification of colors is for identification only. Any authorized manufacturer may supply matches.

D. See Appendix E for logo and color palette. Provide sample in accordance with Section 2.02 Coating Materials.

2.05 FILM THICKNESS TESTING GAUGES

A. Provide the use of a magnetic type dry film thickness gauge (Type 1 or Type 2), to test coating thickness specified in mils, as manufactured by:
   1. Type 1 – Nordson Corp., Anaheim, CA, Mikrotest, or equal.
   2. Type 2 – Defelsko, Positector, or equal.

B. Provide use of an electrical holiday detector, low voltage, wet sponge type to test finish coat, except zinc primer, high-build elastomeric coatings, and galvanizing, for holidays and discontinuities as manufactured by:
   1. Tinker and Rasor, San Gabriel, CA, Model M-1.
   2. Or equal.

C. Provide a high voltage holiday detector for elastomeric coatings in excess of 20 mils dry film thickness. Unit to be as recommended by the coating manufacturer.

PART 3 EXECUTION

3.01 GENERAL

A. For coatings subject to immersion, obtain full cure for completed system. Consult coatings manufacturer's written instructions for these requirements. Do not immerse coating for any purpose until completion of curing cycle.

B. All metal surfaces, wetted, non-wetted, interior, exterior, submerged and non-submerged, shall be painted, whether specifically mentioned or not, except as modified herein.

C. No coating shall be applied when the temperatures of the surface to be painted is below the minimum or above the maximum temperature recommended by the coating manufacturer for application or curing for the type of coating being applied. Provide environmental control for painted surfaces when the surface or ambient temperature may range below the minimum or above the maximum recommended temperature during the curing period. No coating shall be applied in a dust or smoke-laden atmosphere.

D. The temperature of the surface to be painted shall also be at least five (5) degrees above the dew point and rising. Coatings shall not be applied to wet or damp surfaces, and shall not be applied in rain, snow, fog or mist, or when the relative humidity exceeds 80%. No coating shall be applied when it is expected that the relative humidity will exceed 80% or that the air temperature will drop below the manufacturer's recommended minimum temperature within 1 hour after the application of the coating.

Dew or moisture condensation should be anticipated, or if such conditions are prevalent, painting shall be delayed to be certain that the surfaces are dry.

E. The day's painting should be completed well in advance of the probable time of day when condensation will occur, in order to permit the film an appreciable drying time prior to the formation of moisture.

F. The prime or first coat shall be applied as soon as possible after the abrasive blasting and before any rust blooms occur. Each coat shall be allowed to thoroughly dry before applying the next coat. All work shall be cut in neatly and finished coats shall be uniform in color and texture without streaks, laps, heavy build-up, runs, sags or missed areas.

G. Surfaces that are contaminated by rain, sleet, snow, water, dirt, dust, rust blooms, oxidation, or other foreign substances shall be cleaned, dried, and surface preparation restored or repeated prior to application of coating.

H. Concealed structural steel surfaces shall receive surface preparation and prime, intermediate, and finish coats unless modified herein.

I. Striping: All corners, edges, welds and rough areas on scheduled surfaces shall be painted by brush after the prime coat and before the first intermediate coat. Coating type shall be the same as that for the following full coat and shall be a color which contrasts with the prime and intermediate coats. All striping shall be allowed to dry for a minimum time equal to manufacturer's published recommendation for time to handle before application of the following full coat.

J. If a particular coat does not have sufficient dry film thickness as specified, an additional coat or coats of the same material shall be applied until the minimum specific dry mil thickness is achieved.

K. Take all necessary precautions to prevent damage to adjacent property, vehicles, etc. by falling debris, paint in any form, overblast, abrasive accumulation, etc. The Contractor will be held directly responsible for any damages caused as a result of this work. The Owner and Engineer shall not accept any liability for damage to adjacent property, vehicles, etc. by falling debris, paint in any form, etc.

L. Provide adequate ventilation which will effectively remove solvents for proper drying of coatings applied on interior surfaces.

M. All coatings shall be applied under the conditions specified herein by a skilled applicator.

N. Protect all surfaces including concrete from paint spills, drips, and overspray. Remove any paint spills, drips, and overspray from these surfaces.

O. Provide minimum 25-foot candles (270 1x.) of lighting on surfaces to be finished.

3.02 SURFACES NOT REQUIRING COATING

A. Remove, mask, or otherwise protect hardware, switch plates, aluminum surfaces, machined surfaces, flanged surfaces, nameplates, factory finished surfaces and other surfaces not intended to be painted. Replace identification markings on mechanical, electrical, or other equipment when abraded, painted, or spattered.

3.03 APPLICATION SAFETY

A. Perform painting in accordance with recommendations of the following:
   1. Coating manufacturer's instructions.
   2. NACE, contained in the publication, Manual for Painter Safety.
   3. Federal, state, and local agencies having jurisdiction.

3.04 PAINT MIXING

A. Multiple-Component Coatings:
   1. Prepare using all the contents of the container for each component as packaged by coating manufacturer.
   2. No partial batches will be permitted. In the sole opinion of the Engineer, this requirement may be omitted.
   3. Do not use multiple-component coatings that have been mixed beyond their pot life.
   4. Provide coating manufacturer’s small quantity kits for touchup painting and for painting other small areas.
   5. Mix only components specified and furnished by coating manufacturer.
   6. Do not intermix additional components for reasons of color or otherwise, even within the same generic type of coating.
   7. Maintain continuous mechanical pot mixing during application of zinc primers.

B. Keep coating materials sealed when not in use.

C. Where more than one coat of a material is applied within a given system, alternate color to provide a visual reference that the required number of coats have been applied.

3.05 PREPARATION OF SURFACES – GENERAL

A. Perform preparation and cleaning procedures in strict accordance with coating manufacturer’s instructions and as herein specified for each particular substrate condition.

B. Remove hardware, hardware accessories, machined surfaces, plates, lighting fixtures and similar items in place and not to be finish-painted or provide surface-applied protection prior to surface preparation and painting operations. Re-install, following completion of painting of each space or area, removed items by workmen skilled in trades involved.

C. Schedule cleaning and painting so that contaminants from cleaning process will not fall onto wet, newly painted surfaces.

D. Unless otherwise shown or specified in these specifications, all metal surfaces, interior, exterior, submerged and non-submerged, shall be abrasive blast cleaned in accordance with the Coatings Schedule. In the event of discrepancies or omissions, request clarification from the Engineer before starting work in question. Abrasive blast cleaning shall be in conformance with SSPC visual standards.

3.06 STEEL SURFACE PREPARATION:

A. General:

1. Workmanship for metal surface preparation as specified shall meet current SSPC Specifications as follows:
   a. Solvent Cleaning: SP 1.
   b. Hand Tool Cleaning: SP 2.
   c. Power Tool Cleaning: SP 3.
   d. White Metal Blast Cleaning: SP 5.
   e. Commercial Blast Cleaning: SP 6.
   f. Brush-Off Blast Cleaning: SP 7.
   g. Pickling: SP 8.
   h. Near-White Blast Cleaning: SP 10.
   i. Power Tool Cleaning to Bare Metal: SP11.
   j. Brush-off Blast Cleaning of Coated and Uncoated Galvanized Steel, Stainless Steels, and Non-ferrous Metals: SP16
2. Wherever the words "solvent cleaning", "hand tool cleaning", "wire brushing", or "blast cleaning", or similar words of equal intent are used in these Specifications or in coating manufacturer's specifications, they shall be understood to refer to the applicable SSPC Specifications listed above.
3. Hand tool clean areas that cannot be cleaned by power tool cleaning.
4. Test Sections
   a. Prior to production-scale surface preparation, the Contractor shall prepare a test section for each specified preparation level. Each test section shall be located within the area receiving the respective preparation and shall, by the Engineer’s consideration, be representative of the existing surface condition and steel type.
   b. The test sections shall be prepared using the same equipment, materials and procedures as the production scale surface preparation. Each test section shall be in the range of 4 to 9 square feet. The Contractor shall prepare each test section surface to the specified level in accordance with the SPPC visual standards supplied by the Engineer.
   c. Only after a test section has been approved shall the Contractor proceed with production scale surface preparation operations. The visual standards shall be used in addition to the plans and specifications to determine the degree of conformance with the appearance requirements and to determine acceptance of the surface preparation.
   d. No additional compensation will be allowed the Contractor for preparation of test sections.

B. Preblast Cleaning Requirements:

1. Remove oil, grease, welding fluxes, and other surface contaminants prior to blast cleaning.
2. Cleaning Methods: Steam, open flame, hot water, or cold water with appropriate detergent additives followed with clean water rinsing.
3. Clean small isolated areas as above or solvent clean with suitable solvents and clean cloths.
4. Round or chamfer sharp edges and grind smooth burrs, jagged edges, and surface defects.

5. Prepare Welds and Adjacent Areas such that there is:
   a. No undercutting or reverse ridges on weld bead.
   b. No weld spatter on or adjacent to weld or any other area to be painted.
   c. No sharp peaks or ridges along weld bead.
6. Grind embedded pieces of electrode or wire flush with adjacent surface of weld bead.

C. Blast Cleaning Requirements:
1. Type of Equipment and Speed of Travel: Design to obtain specified degree of cleanliness.
2. Select type and size of abrasive to produce a surface profile that meets coating manufacturer's recommendations for particular primer to be used.
3. Use only dry blast cleaning methods.
4. Do not reuse abrasive.
5. Provide a uniform blast profile in the range specified in the Coatings Schedule with a minimal number of embedded particles.
6. Meet applicable federal, state, and local air pollution and environmental control regulations for blast cleaning and disposition of spent aggregate and debris.
7. Blasting shall not be done in dewy, foggy or rainy weather nor when the steel surface is less than five (5) degrees above the dew point and rising.
8. For field blasting, use a low dust abrasive such as Staurolite or equivalent.

D. Post-Blast Cleaning and Other Cleaning Requirements:
1. Clean surfaces of dust and residual particles from cleaning operations by dry (no oil or water vapor) air blast cleaning or other method prior to painting. Vacuum clean enclosed areas and other areas where dust settling is a problem and wipe with a tack cloth.
2. Paint surfaces the same day they are sandblasted.
3. Re-blast surfaces that have started to rust before they are painted.

E. Inspections: Schedule with the Engineer as specified herein.

F. Solvent Cleaning:
1. Consists of removal of foreign matter such as oil, grease, soil, drawing and cutting compounds, and any other surface contaminants by using solvents, emulsions, cleaning compounds, steam cleaning, or similar materials and methods which involve a solvent or cleaning action.
2. Method meets SSPC-SP 1.

3.07 CAST IRON AND DUCTILE IRON SURFACE PREPARATION

A. Do not burnish the surface of tightly adherent annealing oxide or exposed substrate iron.

B. Do not over-blast as-cast ductile iron surfaces.

C. Provide surface preparation of cast iron and ductile iron piping in accordance with NAPF 500-03, Surface Preparation Standard for Ductile Iron Pipe and Fittings

Receiving Special External Coatings and/or Special Internal Linings, as published by the National Association of Pipe Fabricators.

1. NAPF 500-03-01 “Solvent Cleaning”
2. NAPF 500-03-02 “Hand Tool Cleaning”
3. NAPF 500-03-03 “Power Tool Cleaning”
4. NAPF 500-03-04 “Abrasive Blast Cleaning of Ductile Iron Pipe”
5. NAPF 500-03-05 “Abrasive Blast Cleaning of Cast Ductile Iron Fittings”

D. For previously uncoated surfaces, perform the following operations in the sequence listed:
   1. Solvent clean according to NAPF 500-03-01 after a thoroughly scrubbing the entire surface with a solvent-soaked, stiff-bristle brush.
   2. Remove heavy accumulations or deposits of dirt, annealing oxides, rust, and mold coatings as possible with a dull putty knife according to NAPF 500-03-02.
   3. Abrasive blast according to NAPF 500-03-04 for pipe and NAPF 500-03-05 Grade #2 for fittings to remove dirt, dust, loose annealing oxides, loose rust, and loose mold coatings. Tightly adhering rust stains, annealing oxide, and mold coatings may remain on pipe. Surface will have a roughened appearance and surface profile of 1.5 mils minimum.
   4. Remove all raised slivers, scabs, laminations, or bristles by abrasive grinding according to NAPF 500-03-03 or hand filing. Blast burnished or smoothed areas to provide the specified surface profile.

3.08 APPLICATION OF COATINGS

A. Apply each coat to uniform finish without runs, sags, brush or roller marks, skips, ropiness or other defect. Apply coatings in accordance with coating manufacturer's recommendations. Allow sufficient time between coats to assure thorough drying of previously applied coatings. Clean surfaces free of loose particles and use tack cloth just prior to applying each coat.

B. Paint units to be bolted together and to structures prior to assembly or installation.

C. Areas inaccessible for painting after final erection shall have the specified surface preparation and coating application prior to final erection.

D. Steel surfaces shall be finished coated prior to the installation of grouted bottoms or application of insulation.

E. Inspections: Schedule with the Engineer as specified herein.

F. Apply additional coats when undercoats, stains or other conditions show through final coat of paint, until paint is of uniform finish, color and appearance.

G. Paint surfaces behind movable equipment and furniture same as similar exposed surfaces. Paint surfaces behind permanently fixed equipment or furniture with prime coat only.

H. For exposed piping, paint entire pipe surfaces including under/behind supports. Also paint all surfaces of supports including those in contact with the pipe. Painting of

concrete saddle supports is not required. Coating applicator shall be responsible for providing temporary pipe supports as necessary during execution of this work.

I. Paint interior surfaces of ducts, where visible through registers or grilles, with flat, non-specular black paint.

J. Paint back sides of access panels and removable or hinged covers to match exposed surfaces.

K. Finish exterior doors on tops, bottoms and side edges same as exterior faces, unless otherwise indicated.

L. Each coat of paint shall be perceptibly different shade or color. Each coat shall be inspected by Engineer before following coat may be applied. Only coats of paint inspected and found satisfactory by Engineer will be considered in determining minimum number of coats applied.

M. Minimum drying time shall comply with that recommended by coating manufacturer. Each coat shall be thoroughly dry before application of succeeding coats.

N. Make edges of paint adjoining other materials or colors sharp and clean without overlapping.

O. Unless otherwise shown or specified in these Specifications paint or coat the work in accordance with the Coatings Schedule. In the event of discrepancies or omissions in the following, request clarification from the Engineer before starting work in question.

P. Contractor shall minimize excessive film build at surfaces that include exposed fasteners (such as pipe flange bolting) by using a method of coating application (such as HVLP spray) that will provide the necessary control over film build over irregular surfaces. In areas that have, in the sole opinion of the Engineer, excessive film build, Contractor shall be responsible for removal of excessive coatings on exposed fasteners, replacing fasteners that may become damaged by the coating removal process, and re-application of the specified coating system.

3.09 MATERIALS PREPARATION

A. Mix and prepare coating materials in accordance with coating manufacturer’s written directions.

B. Store materials not in actual use in tightly covered containers. Maintain containers used in storage, mixing and application of coatings in clean condition, free of foreign materials and residue.

C. Stir materials before application to produce mixture of uniform density and stir as required during application of materials. Do not stir surface film into the material. Remove film and if necessary, strain material before using.

3.10 SHOP PRIMED OR FACTORY FINISHED SURFACES

A. Inspection: Schedule with Engineer in advance for shop primed or factory finished items delivered to jobsite for compliance with Specifications.

B. Hand or power sand areas of chipped, peeled, or abraded coating, feathering the edges. Follow with a spot primer using specified primer to restore the original shop prime millage and texture.

3.11 MANUFACTURER APPLIED PAINT SYSTEMS

A. Repair abraded areas on factory finished items in accordance with the equipment manufacturer's directions.

B. Carefully blend repaired areas into original finish.

3.12 LOGO AND LETTERING

A. The lettering and logo shall be painted in one location on the south side of the tank. The design of lettering is attached in Appendix E. The minimum height of the logo should be 20 feet and should be centered on the tank. Tank manufacturer to recommend appropriate size of logo which will be approved by the Owner/Engineer during construction. Tank manufacturer shall provide the cost to paint the appropriate size logo in their base bid.

B. The size and design of lettering and logo on the new water tower shall be as follows:
   1. Color Schedule:
      a. Lettering : TO BE DETERMINED BY CITY
         i. Tnemec –
         ii. Sherwin Williams –
         iii. Approved equal
      b. Striping : TO BE DETERMINED BY CITY
         i. Tnemec –
         ii. Sherwin Williams –
         iii. Approved equal
      c. Tank : TO BE DETERMINED BY CITY
         i. Tnemec –
         ii. Sherwin Williams –
         iii. Approved equal
   2. Final logo location, sizing, and colors will be coordinated and confirmed with the Engineer and Owner prior to application during construction.

3.13 FILM THICKNESS

A. Coverage is listed as either total minimum dry film thickness in mils (MDFT) or the spreading rate in square feet per gallon (SFPG).

B. Number of Coats: Minimum required irrespective of coating thickness. Additional coats may be required to obtain minimum required coating thickness, depending on method of application, differences in manufacturers' products, and atmospheric conditions.

C. Maximum film build per coat shall not exceed coating manufacturer's recommendations.

D. Film Thickness Measurements and Electrical Inspection of Coated Surfaces:
   1. Perform with properly calibrated instruments.

2. Recoat and repair as necessary for compliance with the Specifications.
3. All coats will be subject to inspection by Engineer and coating manufacturer's representative.

E. Visually inspect concrete, nonferrous metal, plastic, and wood surfaces to ensure proper and complete coverage has been attained, if specified for coating.

F. Give particular attention to edges, angles, flanges, and other similar areas, where insufficient film thicknesses are likely to be present, and ensure proper millage in these areas.

G. Thickness Testing:
1. After repaired and recoated areas have dried sufficiently, final tests shall subject to inspection by the Engineer.
2. Where required in the Coatings Schedule, measure coating thickness specified in mils with a magnetic type dry film thickness gauge as specified.
3. Where required in the Coatings Schedule, test finish coat, except zinc primer, galvanizing, and elastomeric coatings in excess of 25 mils dry, for holidays and discontinuities with an electrical holiday detector, low voltage, wet sponge type as specified.
4. Where required in the Coatings Schedule, holiday detect coatings in excess of 25 mils dry with high voltage units recommended by the coating manufacturer.
5. `Where required in the Coatings Schedule, check each coat for correct millage. Do not make measurement before a minimum of 8 hours after application of coating.

H. Measure dry film thickness in accordance with SSPC PA 2 for steel and SSPC PA 9 for concrete. MDFT listed in the Coating Schedule is dry film thickness above the substrate profile.
1. For Type 1 gauge, record magnetic pull-off gauge reading for uncoated, prepared substrate or similarly prepared reference panel. Dry film thickness shall be determined by subtracting the reference reading of uncoated substrate from the measured film thickness of coated surface.
2. For Type 2 gauge, the gauge reading is the dry film thickness and no adjustment for substrate profile is required.

3.14 DAMAGED OR DEFECTIVE COATINGS, PINHOLES, AND HOLIDAYS

A. All areas displaying damaged or defective coatings, pinholes, holidays or other defects in the coating shall be marked with chalk that is approved by the coating manufacturer.

B. Feather edges and repair in accordance with recommendations of coating manufacturer.

C. Repair fusion bonded coatings as recommended by original applicator. Applicator shall provide liquid repair kits for this purpose as recommended by coating manufacturer.

D. Apply finish coats, including touchup and damage-repair coats in a manner which will present a uniform texture and color-matched appearance.

E. The coating system applied as part of the repair of damaged or defective coatings, pinholes and holidays shall meet the requirements for the surface preparation and coating system specified for the surface receiving the repair.

3.15 UNSATISFACTORY APPLICATION

A. If item has an improper finish color, or insufficient film thickness, clean and topcoat the surface with specified coating material to obtain specified color and coverage. Obtain specific surface preparation information from coating manufacturer and submit a description of the proposed correction to the Engineer.

B. Hand or power sand visible areas of chipped, peeled, or abraded paint, and feather the edges. Apply the prime, intermediate, and finish coats in accordance with the Specifications. Depending on extent of repair and appearance, finish sanding and topcoat may be required for additional areas.

C. Evidence of runs, bridges, sags, skips, laps, or other imperfections shall be cause for rejection as damaged or defective coatings.

D. Repair defects in coating system per written recommendations of coating manufacturer.

E. Match approved samples for color, texture and coverage. Remove, refinish or repaint work not in compliance with specified requirements.

3.16 PROTECTION

A. Protect work of other trades, whether to be painted or not, against damage by surface preparation, painting and finishing work in accordance with Section 01 76 00 – Protecting Installed Construction. Correct damages by cleaning, repairing or replacing and repainting in accordance with Section 01 76 00 – Protecting Installed Construction and as directed by Engineer.

B. Provide “Wet Paint” signs as required to protect newly painted finishes. Remove temporary protective wrappings provided by others for protection of their work, after completion of painting operations.

C. Surface preparation with low-dust abrasives, limiting use of spray application for zinc-rich primers only, and monitoring wind conditions are intended to minimize but do not preclude the need for containment during surface preparation and painting of the tank exterior. Provide containment as defined by SSPC Guide 6 (1995), Class 4A, Class 3A or equivalent segmented containment when the following conditions are not met by Contractor’s operations:

1. No fugitive dust emissions are visible to MDNR personnel, Engineer, or Engineer’s representative beyond the limits of the Owner’s property.
2. Paint is applied by rolling and wind speed is less than 15 mph.
3. Zinc primer is applied with dry-fall conditions that are acceptable to Engineer or Engineer’s representative.
4. Containment is not explicitly required by MDNR representative.

D. The structural adequacy of a containment system and of the tank with a containment system attached shall be the responsibility of the Contractor.

E. Perform surface preparation and painting of the tank interior with a mist filter or similar device attached to the ventilation exhaust to prevent emission of dust or paint particles.

3.17 INSPECTION

A. Leave all staging up until Engineer has inspected surface or coating. Replace staging removed prior to inspection of surface or coating by Engineer.

B. Visual inspection for pinholes, holidays, dry spray, sags and other flaws shall be performed after each coat is applied. All such flaws shall be corrected before the next coat is applied.

C. Holiday Testing: For all inside/submerged steel surfaces, a pinhole free and continuous film is essential. All interior and submerged coated steel surfaces shall receive holiday testing with the specified holiday detector a minimum of seven (7) days after application of the finish coat. Holiday testing shall be conducted in the presence of the Engineer or the Engineer's Representative. Any areas failing this test shall be marked with chalk that is approved by the coating manufacturer and receive an additional repair coat until satisfactory test results are achieved.

D. If film defects on the inside/submerged surfaces are suspected to involve a significant void or holiday, or the film has been damaged to the substrate, the affected areas shall be masked off with chalk that is approved by the coating manufacturer and spot abrasive blast cleaned in accordance with SSPC-SP 10 and successive coats applied until the specified film thickness is achieved.

E. The final film is to be visually inspected and shall be free of sags, runs, wrinkles and other excessive film build characteristics and surface defects.

F. Field Adhesion Testing shall be performed for tie-coats applied over manufacturer's standard shop coats. Areas affected by testing shall be repaired to specified coating system. Adhesion testing shall also be performed for any coating applied over questionably prepared substrate at ENGINEER's discretion. Field adhesion testing shall be limited to the minimum extent necessary to ascertain if the adhesion of the coat to the substrate is adequate, as determined by ENGINEER's subjective evaluation of the testing.

1. The first field adhesion test performed shall be a "pen knife test" where the paint coat in question cut and probed with a pen knife in an attempt to lift it from the substrate coating or surface. If adequate adhesion can be ascertained from the "pen knife test" the adhesion shall be considered adequate and no further adhesion testing shall be required.
2. The next level of field adhesion testing shall be cross-cut testing in accordance with ASTM D-3359, "Measuring Adhesion by Tape Test". If adequate adhesion can be ascertained from the ASTM D-3359 testing the adhesion shall be considered adequate and no further adhesion testing shall be required.
3. The final level of adhesion testing shall be ASTM D-4541 adhesion testing performed with Hate, Elcometer, or Patti testers. Adequate adhesion strength as determined by ASTM D-4541 shall be not less than 500 psi or the coating manufacturer's written requirement for adhesion strength.
4. If field adhesion testing cannot separate a tie-coat from a shop coat without the shop coat delaminating from the substrate surface or if the shop coat adhesion

strength is demonstrated to be significantly less than the required tie-coat adhesion strength, the tie-coat adhesion shall be considered adequate.

3.18 THICKNESS MEASUREMENTS AND TOLERANCES

A. The thicknesses shown on the Coatings Schedule are the minimum allowable as defined by SSPC-PA 2. The standard states a specified number of "spot readings" shall be taken on each 100 square feet of surface. Make five separate spot measurements (average of three readings) spaced evenly over each 100 square feet of area to be measured. The average of five spot measurements for each such 100 square foot area shall not be less than the specified thickness. No single spot measurement in any 100 square foot area shall be less than 80% of the specified thickness. Any one of three readings which are averaged to produce each spot measurement may under-run by a greater amount. The five spot measurements shall be made for each 100 square feet area per SPCC-PA2, Section 3 Number of Measurements for Conformance to a Thickness Specification.

B. Some paints are especially sensitive to high or low film thickness. In all cases, limitations on maximum or minimum film thickness specified in the manufacturers' instructions shall be followed.

C. The tolerances for the thicknesses indicated shall be as listed in the following table.

Specified MDFT	Minimum Spot Reading Available	Maximum Spot Reading Available	Maximum Average Thickness Available
THICKNESS READINGS IN mils			
1.0	0.8	3.0	2.0
2.0	1.6	5.0	4.0
3.0	2.4	7.0	6.0
4.0	3.2	8.5	7.0
5.0	4.0	9.5	8.0
6.0	4.8	10.5	9.0
7.0	5.6	11.5	10.0
8.0	6.4	12.5	11.0
10.0	8.0	14.5	13.0
12.0	9.6	17.4	15.6
15.0	12.0	23.0	20.0
20.0	16.0	29.0	26.0
25.0	20.0	36.0	32.0
30.0	24.0	42.0	38.0
35.0	28.0	48.0	44.0
40.0	32.0	55.0	50.0
50.0	40.0	68.0	62.0
60.0	48.0	81.0	74.0

3.19 ANNIVERSARY INSPECTION

A. A first anniversary inspection shall be conducted by the Owner, Contractor and coatings manufacturer(s), shall occur 30 days before warranty period ends. The inspection shall be conducted in accordance with NACE SPO0288-2011-SG, inspection of lining on steel and concrete.

B. Anniversary inspection shall inspect and review the following tank features:
   1. Failed coating areas of all sizes.
   2. Usually difficult areas to coat, which may include ceilings, rafters, cathodic protection clips, etc.
   3. Hatch and vent seals are in good condition.
   4. Check that all access hatches and roof hatches open and close correctly.
   5. Where specified, ensure all bolts were coated.
   6. Where specified, ensure the foundation coating is intact and identify any needed touchups.
   7. Check and clean bug screens on all overflow pipes and vents.
   8. For overflow flap gates, ensure gate closes tightly and bug screen is installed.
   9. Where cathodic protection systems are installed, check to ensure all clips, tension rods, ropes and cables are in good condition, including any ice damage.
   10. For exterior ladders, ensure the vandal guard is installed and locked.
   11. Check all welds for failed coatings. Where welds are accessible, use a spark test to identify failed coatings.
   12. Record depth of sediment in bottom of tank, if any.

3.20 SHOP AND FIELD INSPECTIONS

A. Provide the Engineer with a minimum of seven (7) days advance notice prior to the start of all surface preparation work and coating application work. This notice also applies to the Contractor's sub-contractors.

B. Perform all surface preparation and coating work in the presence of the Engineer or his designated representative, unless the Engineer grants written approval to perform such work in the Engineer's absence

C. The Engineer reserves the right to designate a NACE Level 3 inspector or other qualified coatings and corrosion professional as his designated representative.

D. All inspections will be conducted in strict accordance with these specifications, the contract documents, the coating manufacturer's recommendations, and all applicable codes and industry standards.

3.21 COATING MANUFACTURER'S SERVICES

A. Provide coating manufacturer's representative to visit fabrication facilities and field locations at intervals during surface preparation and coating as may be required for product application quality assurance, and to determine compliance with coating manufacturer's instructions and these Specifications, and as may be necessary to resolve all problems attributable to, or associated with, the coating manufacturer's products furnished under this Contract.

B. Provide a minimum Field Service Representation by the coatings manufacturer as follows:
   1. Initial start-up of coating application:
      a. Two (2) trips with one (1) day on-site each, excluding travel time.
   2. Intermediate inspection during application:
      a. Three (3) trips with one (1) day on-site each, excluding travel time.
   3. Final inspection:
      a. One (1) trip with one (1) day on-site, excluding travel time.
   4. Anniversary inspection:
      a. One (1) trip with one (1) day on-site excluding travel time.

END OF SECTION 09 96 00

PAINT SYSTEM DATA SHEET (PSDS) for

PRIME COAT: (Location or Equipment)

Paint System Number (From Specs):		
Paint System Location (From Specs):		
Coatings Supplier:		
Representative:		
Surface Preparation:		
Color:		
Paint Material (Generic)	Product Name/Number (Proprietary)	Min. Coats Coverage

INTERMEDIATE COAT

Paint System Number (From Specs):		
Paint System Location (From Specs):		
Coatings Supplier:		
Representative:		
Surface Preparation:		
Color:		
Paint Material (Generic)	Product Name/Number (Proprietary)	Min. Coats Coverage

FINISH COAT

Paint System Number (From Specs):		
Paint System Location (From Specs):		
Coatings Supplier:		
Representative:		
Surface Preparation:		
Color:		
Paint Material (Generic)	Product Name/Number (Proprietary)	Min. Coats Coverage

CITY OF GRAIN VALLEY

WATER TOWER UPGRADE

DIVISION 10 – SPECIALTIES

TABLE OF CONTENTS

SECTION NUMBER	SECTION TITLE	PAGE NUMBER
10 52 00	Fire Protection Specialties	10 52 00 1-4

PART 1 GENERAL

1.01 SUMMARY

A. This Section includes the following:
   1. Portable fire extinguishers.
   2. Fire-protection cabinets.
   3. Mounting brackets for fire extinguishers.

1.02 SUBMITTALS

A. Product Data: For each type of product indicated.
   1. Fire Extinguishers: Include rating and classification.
   2. Fire-Protection Cabinets: Include door hardware, cabinet type, trim style, panel style, and details of installation.

B. Samples: For each exposed cabinet finish.

1.03 QUALITY ASSURANCE

A. NFPA Compliance: Fabricate and label fire extinguishers to comply with NFPA 10, "Portable Fire Extinguishers."

B. Fire Extinguishers: Listed and labeled for type, rating, and classification by an independent testing agency acceptable to authorities having jurisdiction.

C. Fire-Rated Fire-Protection Cabinets: Listed and labeled to comply with requirements of ASTM E 814 for fire-resistance rating of walls where they are installed.

1.04 COORDINATION

A. Coordinate size of fire-protection cabinets to ensure that type and capacity of fire extinguishers indicated are accommodated.

PART 2 PRODUCTS

2.01 PORTABLE FIRE EXTINGUISHERS

A. Available Manufacturers:
   1. JL Industries, Inc.

2. Larsen's Manufacturing Company.
3. Potter Roemer; Div. of Smith Industries, Inc.

B. General: Provide fire extinguishers of type, size, and capacity for each fire-protection cabinet and mounting bracket indicated.
1. Instruction Labels: Include pictorial marking system complying with NFPA 10, Appendix B and bar coding for documenting fire extinguisher location, inspections, maintenance, and recharging.

C. Multipurpose Dry-Chemical Type in Steel Container: UL-rated 4-A:60-B:C, 10-lb nominal capacity, with monoammonium phosphate-based dry chemical in enameled-steel container.

2.02 FIRE-PROTECTION CABINET

A. Available Manufacturers:
1. JL Industries, Inc.
2. Larsen's Manufacturing Company.
3. Potter Roemer; Div. of Smith Industries, Inc.

B. Cabinet Type: Suitable for fire extinguisher.

C. Cabinet Construction: Nonrated and fire rated. See Drawings for location and extent of each type.

D. Cabinet Material and Shelf: Enameled-steel sheet.

E. Semi-recessed Cabinet: Cabinet box partially recessed in walls of shallow depth to suit style of trim indicated; with one-piece combination trim and perimeter door frame overlapping surrounding wall surface with exposed trim face and wall return at outer edge (backbend).
1. Rolled-Edge Trim: 2-1/2-inch backbend depth.

F. Cabinet Trim Material: Same material and finish as door.

G. Door Material: Clear anodized aluminum.

H. Door Style: Vertical Duo.

I. Door Glazing: Clear Acrylic.

J. Door Hardware: Manufacturer's standard door-operating hardware of proper type for cabinet type, trim style, and door material and style indicated.
1. Provide projecting door pull and friction latch.
2. Provide continuous hinge, of same material and finish as trim, permitting door to open 180 degrees.

K. Accessories:
1. Mounting Bracket: Manufacturer's standard steel, designed to secure fire extinguisher to fire-protection cabinet, with plated or baked-enamel finish.
2. Red vertical lettering.

2.03 MOUNTING BRACKETS

A. Mounting Brackets: Manufacturer's standard galvanized steel, designed to secure fire extinguisher to wall or structure, of sizes required for types and capacities of fire extinguishers indicated, with plated or baked-enamel finish.
1. Color: Red.

B. Identification: Lettering complying with authorities having jurisdiction for letter style, size, spacing, and location. Locate as indicated by Architect.
1. Identify bracket-mounted fire extinguishers with the words "FIRE EXTINGUISHER" in red letter decals applied to mounting surface.

2.04 FABRICATION

A. Fire-Protection Cabinets: Provide manufacturer's standard box (tub), with trim, frame, door, and hardware to suit cabinet type, trim style, and door style indicated. Weld joints and grind smooth.
1. Construct fire-rated cabinets with double walls fabricated from 0.0428-inch- thick, cold-rolled steel sheet lined with minimum 5/8-inch- thick, fire-barrier material. Provide factory-drilled mounting holes.

B. Cabinet Doors: Fabricate doors according to manufacturer's standards, from materials indicated and coordinated with cabinet types and trim styles selected.
1. Fabricate door frames with tubular stiles and rails and hollow-metal design, minimum 1/2 inch thick.
2. Miter and weld perimeter door frames.

C. Cabinet Trim: Fabricate cabinet trim in one piece with corners mitered, welded, and ground smooth.

PART 3 EXECUTION

3.01 INSTALLATION

A. Examine walls and partitions for suitable framing depth and blocking where recessed and semirecessed cabinets will be installed.

B. Examine fire extinguishers for proper charging and tagging. Remove and replace damaged, defective, or undercharged units.

C. Prepare recesses for recessed and semirecessed fire-protection cabinets as required by type and size of cabinet and trim style.

D. Install fire-protection specialties in locations and at mounting heights indicated or, if not indicated, at heights acceptable to authorities having jurisdiction.

E. Fire-Protection Cabinets: Fasten fire-protection cabinets to structure, square and plumb.
   1. Unless otherwise indicated, provide recessed fire-protection cabinets. If wall thickness is not adequate for recessed cabinets, provide semirecessed fire-protection cabinets.
   2. Fasten mounting brackets to inside surface of fire-protection cabinets, square and plumb.

F. Mounting Brackets: Fasten mounting brackets to surfaces, square and plumb, at locations indicated.

G. Adjust fire-protection cabinet doors to operate easily without binding. Verify that integral locking devices operate properly.

H. Replace fire-protection cabinets that have been damaged or have deteriorated beyond successful repair.

END OF SECTION 10 52 00

CITY OF GRAIN VALLEY

WATER TOWER UPGRADE

DIVISION 13 – SPECIAL CONSTRUCTION

TABLE OF CONTENTS

SECTION NUMBER	SECTION TITLE	PAGE NUMBER
13 21 10	Composite Elevated Water Storage Tank	13 21 10 1-30

PART 1 GENERAL

1.01 SECTION INCLUDES

A. The work under this item includes the design, fabrication and erection of a new water tank with accessories and supporting structures located at the Grain Valley Water Tower Upgrade project location.

B. The design and construction of the elevated storage tank foundation.

C. The inspection and testing of the storage tanks and incidental piping.

D. The disinfection of the storage tanks shall be in accordance with AWWA.

1.02 RELATED SECTIONS

A. Section 01 11 10 – Schedule and Summary of Work
B. Section 01 33 00 – Submittal Procedures
C. Section 01 78 10 – Project Record Documents
D. Section 01 78 23 – Operation and Maintenance Manuals
E. Section 02 30 00 – Subsurface Investigation
F. Division 3 – Concrete
G. Division 5 - Metals
H. Section 09 96 00 – High Performance Coatings
I. Division 26 – Electrical
J. Division 31 – Earthwork
K. Division 33 – Utilities
L. Division 40 – Process Interconnections

1.03 MEASUREMENT AND PAYMENT

A. The Contractor shall be responsible for estimating the amount of work specified under this Section and including it in their Unit Price Bid.

1.04 REFERENCE TO STANDARDS

A. The latest version of the following Specifications, Codes and Standards are referenced in this section:

ACI 117	Standard Tolerances for Concrete Construction and Materials
ACI 228	In-Place Methods to Estimate Concrete Strength
ACI 301	Specification for Structural Concrete
ACI 304	Guide for Measuring, Mixing, Transporting and Placing Concrete
ACI 305	Hot Weather Concreting
ACI 306	Cold Weather Concreting

ACI 318	Building Code Requirements for Structural Concrete
ACI 347	Guide to Formwork for Concrete
ACI 371	Guide for the Analysis, Design and Construction of Elevated Concrete and Composite Steel-Concrete Water Storage Tank
AISC S335	Specification for Structural Steel Buildings
ANSI B16.5	Pipe Flanges and Flanged Fittings
ANSI B16.9	Steel Butt-Welding Fittings
ASCE 7	Minimum Design Loads for Buildings and Other Structures
API 650	Welded Steel Tanks for Oil Storage
ASTM A 53	Pipe, Steel, Black and Hot-Dipped, Zinc-Coated Welded and Seamless
ASTM A 36	Structural Steel
ASTM A 123	Zinc Coatings on Iron and Steel Products
ASTM A 240	Stainless Steel Plate, Sheet and Strip for Pressure Vessels
ASTM A 285	Pressure Vessel Plates, Carbon Steel
ASTM A 774	Welded Stainless-Steel Fittings
ASTM A 778	Welded Stainless Steel Tubular Products
AWWA C104/A21.4	American National Standard for Cement-Mortar Lining for Ductile-Iron Pipe and Fittings for Water
AWWA C110/A21.10	American National Standard for Ductile-Iron and Gray-Iron Fittings, 3 in. through 48 in. for Water and Other Liquids
AWWA C111/A21.11	American National Standard for Rubber-Gasket Joints for Ductile-Iron Pressure Pipe and Fittings
AWWA C151/A21.51	American National Standard for Ductile-Iron Pipe, Centrifugally Cast, for Water or Other Liquids
AWWA C208	AWWA Standard for Dimensions for Fabricated Steel Water Pipe Fittings
AWWA C210	AWWA Standard for Liquid-Epoxy Coating Systems for the Interior and Exterior of Steel Water Pipelines
AWWA C642	AWWA Standard for Disinfection of Water Storage Facilities
AWWA D102	Coating Steel Water Storage Tanks
AWWA D104	AWWA Standard for Automatically Controlled, Impressed-Current Cathodic Protection for the Interior of Steel Water Tanks
AWWA D107	Composite Elevated Tanks for Water Storage
AWWA C652	Disinfection of Water Storage Facilities
BOCA	International BOCA National Building Code
FAA 70/7460-1H	Obstruction Marking and Lighting
NACE RP0178	Recommended Practice - Fabrication Details, Surface Finish Requirements and Proper Design Considerations for Tanks and Vessels to be Lined for Immersion Service
NFPA NEC	National Electric Code
NFPA 780	Standard for the Installation of Lightning Protection Systems
NSF 61	Standard for Drinking Water System Components
OSHA 29 CFR	Part 1926 Safety and Health Regulations for Construction
SSPC-PAL	Paint Application Specification
SSPC VIS-89	Visual Standard for Abrasive Blast Cleaned Steel

1.05 SYSTEM DESCRIPTION

A. Elevated Tank

1. The Composite Elevated Tank shall consist of the following: foundation, reinforced concrete support structure and a welded steel water tank. The support tower shall extend vertically from the foundation as a circular concrete support structure/wall. A structural concrete dome shall be provided as structural support for the contained water within the perimeter of the wall. A concrete slab shall be provided as structural support for the steel tank within the perimeter of the wall. A reinforced concrete ring beam shall be provided to connect the welded steel water tank, concrete dome and concrete support wall. The Composite Elevated Tank shall be in accordance with the shape, dimensions and details required by these Specifications and Drawings. Dimensions may be slightly adjusted to suit the Composite Elevated Tank Manufacturer's standard welded steel water tank shape. The Composite Elevated Tank construction drawings shall be sealed by a licensed engineer in the state of Missouri.

2. Operating Parameters

Minimum capacity within operating range		1,000,000	gallon
Maximum operating range		40	ft
Maximum fill rate		2,200	gpm
Elevation	- overflow/top capacity level	1040.50	ft
	- grade slab	933.00	ft
	- final ground	933.00	ft
Support wall diameter		38	Ft

3. General Design /Design Loads

a. All loading to be determined by Tank Manufacturer in accordance with AWWA Standards.

4. Foundation Design

a. The foundation shall be designed by the Composite Elevated Water Storage Tank Contractor to safely support the structure based on the foundation recommendations within the geotechnical consultant's soil report. Foundations shall be sized in accordance with AWWA D107, Section 7, "Foundations". Foundations shall be designed in accordance with the Missouri Department of Natural Resources publication Minimum Design Standards for Missouri Community Water Systems. This standard requires that the tops of footings or foundations for elevated tanks shall be at least one foot above the finished grade.

b. Foundation design shall be sealed by a licensed structural engineer in the state of Missouri.

c. Foundations shall be designed in accordance with the Missouri Department of Natural Resources publication Minimum Design Standards for Missouri Community Water Systems. This standard requires that the tops of footings or

foundations for elevated tanks shall be at least one foot above the finished grade. A design standard exception shall be approved by MDNR if foundation design does not adhere to the one foot above finished grade requirement. Contractor will need a licensed engineer in the state of Missouri to seal the design standard exception request form. The design standard exception request form is attached in Appendix D – MDNR Design Standard Exception Request Form.

1.06 QUALIFICATIONS

A. 3.03 Manufacturer shall certify to not less than ten (10) years of experience in the design, fabrication and erection of elevated water storage tanks meeting AWWA requirements. Where this experience requirement is not met, submission of a bond or deposit shall be permitted instead of the specified experience period. The period of time for which the bond or deposit is required shall not exceed the experience period specified.

B. Manufacturer shall have designed and constructed at least five (5) new composite elevated tanks. Project information provided should include Project Name, Project Location, Owner, Contact Information, Project Cost, and Project Description with bid.

1.07 SOIL REPORT

A. See Specification Section 02 30 00 – Subsurface Investigation for information regarding the soil boring report available for this project. See Appendix A for the Geotechnical Engineering Report for this project.

1.08 SUBMITTALS

A. Proposal (submit the following with the BID):

1. Experience List – A completed contracts summary shall demonstrate a minimum of ten years' experience in the design and construction of Composite Elevated Tanks. The contractor shall list a minimum of five completed Composite Elevated Tanks of similar capacity. Provide the location, capacity, Owner's name and contact information, Engineer's name and contact information and year completed. Failure to provide this information shall be cause for rejection of the bid.

2. Tank Drawing – A preliminary section view drawing of each sized Composite Elevated Tank proposed for this project. The drawing shall include sufficient detail to illustrate tank geometry, materials of construction, primary dimensions, the high-water level elevation, concrete support structure wall thickness and other information required to show compliance with this Specification. If the proposed design does not comply with the specifications, the bid shall be rejected.

3. Foundation drawing – A drawing of the preliminary design of the foundation for each sized Composite Elevated Tank proposed for this project. The drawing shall include sufficient detail to illustrate foundation geometry, materials of construction, preliminary dimensions and approximate quantities of concrete and reinforcing steel. Failure to provide this information shall be cause for rejection of the bid.

B. Construction Submittals

1. Submit under the provision of General Requirements - Section 01 33 00. Review by and acceptance by the Engineer of shop drawings shall be completed prior to commencing construction activities. There shall be no exception to this requirement.

2. Elevated Tank Foundation Submittal
   a. The Contractor shall submit complete computations, drawings and specifications for the elevated tank foundation system selected. The submittal shall bear the seal and signature of the Foundation Designer of Record's Professional Engineer. The professional engineer shall be licensed and registered in the State of Missouri. There shall be no exceptions to this requirement.
   d. As part of the elevated tank foundation submittal, the Contractor shall submit concrete pour sequences for the base slab construction. Massive concrete pours shall be detailed and shall be subject to additional review by the Engineer.

3. Elevated Tank Shop Drawings shall include the following as a minimum:
   a. Certification that the elevated tank and associated foundation has been designed in accordance with AWWA and the requirements set forth herein. This shall include the seal and signature of a licensed professional engineer registered in the State of Missouri and there shall be no exceptions to this requirement.
   b. Comprehensive drawings of the elevated tank, elevated tank foundations and all details, design loadings, allowable soil-bearing pressure and all dimensional data and construction requirements. Include structural design calculations for elevated tank foundation.
   c. Comprehensive drawings of the elevated tank and details of all welded joints and elevated tank accessories including dimensional data and plate thicknesses. Include structural design calculations for the elevated tank.
   d. Submit mill test certificates of supplied steel, indicating physical and chemical analysis.
   e. Steel tank details shall include weld joints and a layout showing all primary and secondary shop and field welds.
   f. Reinforced concrete details shall include construction joints, openings and inserts. Reinforcement shall be clearly

indicated on the structural drawings and identified by mark numbers that are used on the fabrication schedule. Location, spacing and splice dimensions shall also be shown. Placement and fabrication details shall conform to ACI 318.

g. The professional engineer's seal and signature shall be affixed to the specifications and each drawing associated with the elevated tank and its foundation. Seal and signature shall be affixed to each drawing prior to submittal to the Engineer.

h. Hydraulic calculations for the design of the elevated tank overflow with anti-siphon and riser height.

4. Construction Procedures Submittal

a. Provide design, detail drawings and procedures for the support structure forming system. Details shall include location of form and construction joints, rustications and any form ties. The criteria and minimum elapsed time for adjacent concrete placement shall also be clearly stated in the construction procedures. Procedures shall yield a minimum of twenty-four (24) hours of cure time before form removal OR form removal procedures shall be based on concrete strength as long as procedures are compliant with ACI 318 and ACI 347.

b. Provide shop and field weld procedures for all structural joints on the steel tank.

5. Design Data Submittal

a. Provide a table showing capacity of the tank in gallons at all levels in one ft. increments.

b. Provide a summary of the design for the foundation, concrete support structure, welded steel water tank and other components. Include the design basis, the loads and load combinations and the results.

c. Provide a finite element analysis that accurately models the intersecting elements of the interface region. The interface region includes those portions of the concrete support structure and steel tank affected by the transfer of forces from the tank cone and the tank floor to the concrete support wall. The analysis shall provide results including the shear, moment, and compression or tension caused by the intersecting elements in the interface region.

6. Product Data

a. Provide separate concrete mix designs for each specified concrete compressive strength indicated on the drawings.

b. Provide technical data and manufacturer’s standard color chart of all coating products to be used.

c. Provide manufacturer’s descriptive information for appurtenant equipment and accessories that are not detailed on the construction drawings.

7. Reports/ Certification
   a. Provie documentation of all tests, inspections, and certifications required by this Section.
   b. Provide general qualifications of all welders.

8. Operation and Maintenance
   a. Provide operating instructions and maintenance procedures for the Composite Elevated Tank and applicable appurtenant equipment, mechanical components and miscellaneous accessories.

9. Disinfection Submittals
   a. The Contractor shall submit the time schedule for the disinfection and the form of chlorine which will be used to the Engineer two (2) weeks prior to commencing this work.
   b. The Contractor shall submit a copy of the disinfection testing performed by the MDNR certified bacteriological testing laboratory to the Engineer prior to Substantial Completion.

10. Elevated Tank Field Inspection Submittals
   a. The Contractor shall submit a written report, prepared by the Contractor's qualified personnel, that certifies that the work was inspected in accordance with AWWA D107. Include in the report a weld joint record showing the initials or identifying mark of each welder employed on each joint welded during fabrication and erection of the elevated tank and accessories. Joints in the weld joint record shall be referenced to the joints shown in the shop drawing detail.
   b. The Contractor shall submit all radiographic film used for weld inspection. The film shall be clearly labeled or indexed to indicate the location of the welds radiographed. The radiographic film will become the property of the Owner.
   c. The Contractor shall submit a report of all weld inspections carried out by the air carbon arc gouging method as described in AWWA D107. The report shall identify each joint so inspected, the justification for each inspection, and the recorded length of each inspection and findings. The report shall be prepared by the Contractor's qualified personnel.
   d. Elevated Tank Field Inspection Reports shall be submitted within 30 days of completion of work covered by Elevated Tank Field Inspection Reports and prior to Substantial Completion. Contractor shall perform additional testing or provide additional services required to comply with AWWA D107 or other deficiencies determined by the Engineer in the field inspection procedures or report at no additional cost to the contract.

11. Submit a completed Pipe Line Pressure Testing Record for each pipeline pressure test conducted.

1.09 QUALITY ASSURANCE (RESERVED)

1.10 REGULATORY REQUIREMENTS

A. Contractor shall coordinate construction activities with the following regulatory agencies:

1. Federal Aviation Administration (FAA)
   Aeronautical Study No. 2024-ACE-6489-OE

2. Missouri Department of Natural Resources (MDNR)
   Construction Permit

1.11 COORDINATION

A. Any piping which penetrates a structure shall be coordinated by the Contractor.

B. Electrical conduit and wiring necessary for a complete operational system shall be coordinated with manufacturer.

C. Contractor shall coordinate disinfection and filling of elevated tank with Owner's water department and Engineer.

1.12 MAINTENANCE SERVICE (WARRANTY)

A. The manufacturer shall warrant the equipment to be free of material or workmanship defects for a period of one year from the date of substantial completion established by the Owner. During that one year, the Contractor shall at his expense replace any part or parts which malfunction or corrode due to defective manufacture or installation.

B. An anniversary inspection shall be scheduled at least 30 days prior to the warranty period expiring.

1.13 EXTRA MATERIALS (SPARE PARTS) (RESERVED)

1.14 OPERATIONS AND MAINTENANCE MANUALS

A. Submit Operation and Maintenance Manuals in accordance with Section 01 78 23 – Operation and Maintenance Manuals.

1.15 RECORD DOCUMENTS

A. Prepare record documents in accordance with 01 78 10 Project Record Documents.

PART 2 PRODUCTS

2.01 MATERIALS

A. The tank shall be comprised of welded steel construction and supporting structure shall be comprised of reinforced concrete. All parts shall be of watertight construction, including those portions above the high-water level. Refer to the drawings for site location, roadway access, etc.

B. The materials, design, fabrication, erection, welding, inspection and testing of the elevated tank shall conform to the current version of the American Water Works Association standard for "Composite Elevated Tanks for Water Storage" (AWWA D107). The following information is in addition to or as clarification of requirements of AWWA D107.

C. Reinforced Concrete
   1. Concrete materials and reinforcement shall comply with ACI 318 and AWWA D107, except as modified in this Section.

D. Steel Tank
   1. Welded steel water tank components, including steel plates, sheets, structural shapes and filler metals shall be in accordance with AWWA D107.

2.02 CONCRETE FOUNDATION

A. The concrete foundation shall be designed in accordance with ACI 318. Minimum specified compressive strength shall be 4000 psi at 28 days. The service load reinforcement tension stress shall not exceed 30,000 psi under dead plus water load unless flexural cracking is otherwise controlled in accordance with ACI 318.

B. Design of Foundation

It shall be the responsibility of the Contractor to employ a Foundation Designer of Record who will provide the foundation design in accordance with these contract documents. Minimum design requirements for the elevated tank foundation shall be in accordance with Part 2.01 of this specification section.

These contract documents shall be used as guidelines, incorporated into the Contractor’s design specifications at the Contractor’s discretion and submitted to the Engineer for review. If the Foundation Designer of Record elects to utilize additional specifications for items items of construction that are not addressed in the above specifications, the Contractor shall also submit them to the Engineer for review.

Submit all special construction procedures, in the form of industry-standard specifications and details, associated with the selected alternate. Submit concrete pour sequence for pile cap / base slab construction. Massive concrete pours shall be detailed in the submittal and shall be subject to additional review by the Engineer.

Foundation Designer of Record’s computations, plans and specifications are only to be reviewed by the Engineer to determine completeness. Foundation

Designer of Record is completely responsible for all his design computations, plans and specifications. Submittals shall be made in accordance with requirements of 1.06 of this section (Section 33 16 00) of the specifications.

Shop drawings shall include, as a minimum, pile layout, details, reinforcing, design computations and other incidentals associated with the selected option.

B. Foundation Design

Concept of acceptable foundation for the support of the elevated tank is presented herein. The foundation option shall include a continuous ringwall on which the elevated tank bears. Further engineering design development of the concept shall be the responsibility of the Contractor.

1. Foundation Concept: Removal and Replacement of Existing Subgrade Materials.

Remove at least two feet of native soil below the foundation (elevation 1475 feet, approximately 10 feet below the existing ground level), and replace them with an engineered backfill for the support of the reinforced concrete tank foundation and ringwall. Backfill shall consist of a well-graded granular material, with a gradation similar to a Type 5 aggregate (as defined by the MoDOT Standard Specifications). The granular backfill shall contain no more than 15 percent by weight of material passing the number 200 sieve, with a maximum particle size of 1½". The granular backfill shall be placed in eight inch to ten inch loose lifts and compacted to a dry density of at least 100 percent of the maximum dry density as obtained by the Standard Proctor Compaction Test (ASTM D698). In lieu of compacted granular engineered fill, CLSM may be placed in accordance with Specification Section 03 00 10.

In plan, the base of the engineered granular fill shall be of an area to produce a maximum static soil bearing pressure of 3,500 pounds per square foot and a maximum dynamic soil bearing pressure of 4,500 pounds per square foot on the native soils. The engineered granular fill shall extend horizontally beyond the edge of the foundation mat for a distance two times the fill thickness or 2'-6", whichever is greater. Outside the outer limits of the engineered granular fill, on-site non-organic excavated soils may be used to fill the remainder of the excavation, up to final grade. The outer limits of the engineered granular fill shall be confined as it is brought up by placing the cohesive site soils between the engineered granular fill and the sloped excavation sides, as each lift is placed and compacted. These natural site soils shall be compacted to at least 95 percent of the maximum dry density as obtained by the Standard Proctor Compaction Test (ASTM D698).

A reinforced concrete mat foundation may then be placed in the upper part of the engineered granular fill zone. Frost requirements and other construction considerations also apply.

The estimated maximum total settlement of the removal and replacement method is anticipated to be less than one-inch. Other settlement-related behavior conditions are referenced in the geotechnical report for this project (see Specification Section 02 30 00 - Subsurface Investigation). Other parameters and construction specifications are included in Division 2 and 3 of this specification.

Actual settlement around the perimeter of the tank foundation shall be monitored during construction and during the first loading of the elevated tank for comparison to estimated values.

Piping, electrical conduit and other appurtenances under and in the immediate vicinity of the tank shall be furnished with appropriate flexible fittings to accommodate anticipated settlement conditions referenced in the geotechnical report.

C. Design Features and Requirements

The foundation design shall bear the seal of a licensed professional engineer registered in the State of Missouri. There shall be no exception to this requirement. The design shall include all anticipated loading conditions and load combinations and shall include buoyancy and the moment due to eccentricity of the gravity loads caused by deflection of the structure under wind or seismic conditions (i.e. P-delta effect). All concrete design and construction shall conform to ACI 318-11 “Building Code Requirements for Reinforced Concrete”. The concrete and reinforcement shall comply with all requirements of ACI 301 and Division 3 of these specifications. All steel design and construction shall conform to AISC “Manual of Steel Construction” Fourteenth Edition. Design shall be performed in accordance with widely accepted engineering principles and practices and shall conform to all applicable Federal, State and local codes and regulations.

2.03 CONCRETE SUPPORT STRUCTURE

A. The concrete support structure shall be designed in accordance with ACI 318. The specified compressive strength of concrete shall be as required by design, but not less than 4000 psi at 28 days. The maximum specified compressive strength of concrete for the wall and dome shall be 6000 and 5000 psi respectively.

B. Support Wall

1. Support wall shall be reinforced concrete with a minimum thickness of 8 inches exclusive of any architectural relief. Wall thickness shall be provided such that the average compressive stress due to the weight of the structure and stored water is limited to 25% of specified compressive strength, but not greater than 1000 psi. A minimum total wall reinforcement of 0.15% vertically and 0.20% horizontally shall be distributed approximately equally to each face. A minimum of 0.75% vertical reinforcement shall be provided in the top 6 ft. of the wall

extending into the concrete ring beam. Minimum concrete cover for interior / exterior faces shall be 1 inch and 1-1/2 inches respectively.

C. Tank Floor

1. Tank floor shall be a reinforced concrete dome not less than 8 inches thick. The average compressive stress due to the weight of the structure and stored water shall not exceed 13% of the specified compressive strength, nor greater than 600 psi. Minimum total reinforcement in orthogonal directions shall be 0.40% distributed approximately equally to each face. Additional reinforcement shall be provided for stress caused by edge restraint effects.

D. Openings

1. The effects of openings in the wall shall be considered in the design. Not less than 60% of the interrupted reinforcement in each direction shall be placed each side of the opening. Reinforcement shall extend past the opening not less than half the transverse opening dimension.
2. Openings wider than 3 ft. 6 in. shall be subjected to a rigorous analysis taking into account the stress concentrations and diminished lateral support that exist in the vicinity of such openings. Each side of the opening shall be designed as a column in accordance with ACI 318.
3. Openings 8 ft. 0 in. or wider used for vehicle access shall be strengthened against vehicle impact and local buckling by means of an internal buttress located on each side of the opening. The buttress shall consist of a thickened, reinforced concrete wall section that is integrally formed and placed with the support wall. The buttress section shall be not less than 3 ft. 0 in. wide and 6 in. thicker than the nominal wall dimension.

2.04 CONCRETE SUPPORT STRUCTURE / STEEL TANK INTERFACE

A. Interface Region

1. The interface region includes those portions of the concrete support structure and steel tank affected by the transfer of forces from the tank cone and the tank floor to the concrete support wall. This includes a ring beam and connection details. The Contractor shall provide evidence that a thorough review of the interface region has been performed. Finite element and finite difference analyses are the required methods for examining such local stresses in detail.
2. The geometry of the interface shall provide for positive drainage and not allow either condensate or precipitation to accumulate at the top of the concrete wall or ring beam.

B. Ring Beam

1. The ring beam shall be reinforced concrete with a nominal width and height of at least two times the concrete support structure wall thickness. Minimum radial and circumferential reinforcement shall be 0.25%. For direct tension, reinforcement shall be provided such that the average service load stress in tension reinforcement due to the weight of the structure and stored water does not exceed 12,750 psi.

2. Ring beam design shall consider unbalanced forces from the welded steel tank cone and concrete dome, load conditions varying with water level, eccentricity of loads resulting from design geometry and allowance for variations due to construction imperfection and tolerance.
3. At junctions in plates where meridional forces are discontinuous such as cone to cylinder junctions or cone to base plate junctions, a tension or compression ring may be required to resist the radial forces generated by the discontinuous membrane forces. In these regions, the allowable stresses shall not exceed the following stresses:
4. Tension ring stresses shall not exceed the lesser of 15,000 psi or one half of the minimum specified yield of the plate material.
5. Compression ring stresses shall not exceed 15,000 psi.
6. To determine the stresses in the ring due to discontinuity forces, the shell plates immediately adjacent to the discontinuity may be assumed to participate for a distance of 0.78 (Rt)0.5. (Where R = the radius of the exterior surface of the shell plate and t = the thickness of the shell plate; both dimensions in inches.)

C. Support Structure
1. The over-turning moment used in designing the pedestal shall include the moment due to eccentricity of the gravity loads caused by deflection of the structure under wind or seismic conditions (i.e. P-delta effect).

2.05 STEEL TANK

A. General
1. The steel tank shall be all welded construction and shall be designed in accordance with AWWA D107, Section 5, “Steel Tank”. The required capacity and dimensions of the tank are noted on the drawings and in this section of the specifications. All exposed lap joints shall be fully seal welded on both sides.
2. No copper-bearing steel is required.
3. All sharp edges and corners shall be dulled with a power grinder. All welds shall be ground to remove sharp edges, burrs and slag material.
4. No corrosion allowance is required.
5. For butt-welds subject to secondary stress use double groove welds on materials thicker than 3/8 inch to obtain complete joint penetration.

B. Loading
1. All loading to be determined by Tank Manufacturer in accordance with AWWA Standards.

2. The snow loading shall be determined by the tank manufacturer for surfaces having a slope of 30 degrees or less with the horizontal. The specified snow load shall not be less than that required by AWWA.

C. Plate Thickness
1. All members shall be designed to safely withstand the maximum stress to which they may be subjected during erection and normal

operation. The minimum thickness of any steel plate in contact with water shall be 1/4 in. The minimum thickness of any steel plate not in contact with water shall be 3/16 in.

2. For plates in contact with the stored water, compressive stresses due to dead and live loads or dead and live loads combined with primary bending stresses due to wind or earthquake loads shall not exceed the lower bound critical buckling stress of the shell assuming the plate thickness is reduced 1/8" by corrosion. The lower bound critical buckling stress for both load combinations shall not exceed two times the basic allowable compressive stress applied to the design of the un-corroded thickness for the dead and live loads.

D. Roof Support

1. All structural members supporting the roof of the steel tank shall be flat bar or sealed square tubular sections. I-beams or other sections with horizontal projections may be used if the nominal depth is 10 in. or greater. Support beams shall be seal welded to the underside of the roof plate along the entire length of the beam.

E. Cone

1. Conical sections of the tank shall be designed using one of the 3 methods described in AWWA D107, Section 5.3.5. Inspections and reports shall be provided to the extent required by AWWA D107.

2.06 ACCESSORIES

A. General

1. Accessories shall comply with the minimum requirements of the Specifications, Codes and Standards listed in paragraph 1.2, current applicable safety regulations and the operating requirements of the structure.
2. Provide and install all accessories as shown on the drawings and herein described.

B. Ladder Access

1. Ladders shall be provided from the slab on grade inside the base of the concrete support structure to the upper walkway platform located below the tank floor. The tank floor manhole shall be provided with ladder access from the upper platform. A ladder shall extend from the upper platform, through the access tube interior to the roof. A ladder mounted on the access tube exterior shall be provided for access to the tank interior, extending from the roof manhole to the tank floor.
2. Ladders that terminate at platforms or landings shall extend a minimum of 48 in. above the platform elevations. A safety extension shall be provided at the top of the ladder under hatch(s). The safety extension shall be a Ladder Up Safety Post as manufactured by Bilco or equal. The post shall extend 42-inches above the top of the ladder

and be constructed of hot dip galvanized steel. Mounting hardware shall be galvanized.

3. Ladders located in the concrete support structure and access tube interior shall be galvanized steel. Tank interior ladders shall be coated in accordance with the tank interior coating system.
4. Ladder side rails shall be a minimum 3/8 in. by 2 in. with a 16 in. clear spacing. Rungs shall be minimum 3/4 in. diameter, spaced at 12 in. centers and plug welded into holes drilled in the side rails. Tank interior ladders shall be provided with 1 in. diameter rungs and 1/2 in. x 2 in. side rails and shall be fully seal welded.
5. Ladder shall be secured to the adjacent structure by brackets located at intervals not exceeding 10 ft. Brackets shall be of sufficient length to provide a minimum distance of 7 in. from the center of rung to the nearest permanent object behind the ladder. Ladder brackets located on the access tube exterior shall be reinforced at the access tube shell so that potential ice damage is confined to the ladder and bracket and not the access tube shell.

C. Safe Climbing Device

1. OSHA compliant safe climbing system furnished with “Saf-T-Climb” or equal fall prevention devices shall be provided on all ladders. Two sleeves with snap hooks shall be provided that are designed to be operated with the system. Two harnesses with shock resistant lanyards shall be provided with the system.

D. Rest Platforms

1. Rest platforms shall be provided at maximum 50 ft. intervals along the support wall ladder. Platforms shall be minimum 3 ft. by 5 ft. and complete with handrails, mid rails and toe plates in accordance with OSHA requirements. Grating shall be used for the walking surface and shall be suitably hinged at the ladder penetration. Platforms shall be arranged for straight run ladder and operable without removing fall prevention equipment. All components shall be galvanized steel.

E. Platforms

1. A 4 ft. wide upper walkway platform shall be located at the top of the support wall to provide access from the support wall ladder to the roof access ladder located on the interior of the access tube. Platforms shall be provided with handrails, mid rails and toe plates in accordance with OSHA requirements. Grating shall be used for the walking surface. All components shall be galvanized steel.

F. Support Wall Doors

1. Personnel Door
    a. Door frames shall be 16-gauge with concealed reinforcement at hardware locations. Expansion type anchors for existing openings shall be installed near the top, bottom and intermediate point of each jamb to rigidly secure the frame. Doors shall be 1 3/4 in. thick insulated, reinforced, full, flush

type with 18-gauge face sheets and concealed reinforcement at hardware locations. All edges shall be finished flush with watertight seams. Shop applied finish for the frame and door shall be baked on rust inhibitive primer. Field finish shall be compatible with the tank exterior. Standard hardware shall be stainless steel and include three 4 1/2 in. by 4 1/2 in. hinges, industrial duty closer and lockset.

b. One 36-inch by 80-inch access personnel door with flush threshold located in the base of the pedestal complete with a handle, drip cover, and dead bolt lock. The door shall be fabricated from galvanized steel plate with adequate stiffening and specifically designed for use with the tank. Frame shall be continuously welded to tank. The deadbolt lock shall be keyed as directed by the Owner.

2. Overhead Vehicle Door

a. Door installation shall be on the interior face of the support wall. The door frame shall be a steel plate fabrication suitably detailed, fastened and reinforced to accept the door. Operation shall be manual with a chain hoist. The curtain shall be formed of 22-gauge steel interlocking slats with end locks and wind locks designed for a wind loading of 20 psf. Torsion springs shall be mounted on a solid torsion rod, which is attached to an exterior mounted spring tension adjustment wheel. A 24-gauge steel hood shall be provided with a weather seal to protect the assembly. Steel brackets shall be installed to the interior face of the wall with expansion anchors which enclose and support the counterbalance assembly with sealed bearings. Steel curtain guides are mounted to the brackets. The curtain, bottom bar, brackets, guides, hood, pipe and chain shall be galvanized. Provide with locking device.

b. Size, quantity and location of vehicle door(s) shall be as shown on the drawings.

G. Tank Openings

1. Floor - Provide a 30 in. diameter manhole through the tank floor. The manhole shall be operable from a ladder located on the upper platform and shall be designed to withstand the pressure of the tank contents without leakage. The manhole assembly shall include a stainless steel hand wheel operator and threaded components.

2. Roof - Provide one 30 in. diameter weatherproof access hatch on the roof of the tank. The hatch will allow access from the roof to the interior tank ladder. The hatch opening shall have a minimum 6 in. curb. Hatch cover to be constructed of aluminum and shall have a 2 in. downward edge, stainless steel hardware and locking mechanism.

3. Roof – Provide one 24 in. diameter exhaust hatch located adjacent to the roof hatch. The exhaust hatch will be flanged with a bolted removable cover and designed such that an exhaust fan may be bolted to the hatch for ventilation during painting. The opening shall have a minimum 6 in. curb. Roof opening shall have a hinged cover

with downward overlap of 2-inches. Provide a resilient gasket to seal between curb and underside of hatch.

4. A grab post or handle (as appropriate) shall be provided at each manhole.

H. Access Tube

1. Provide a 60 in. diameter centrally located access tube through the welded steel water tank to provide access to the tank roof from the upper walkway platform. The openings shall have a minimum 6 in. curb. Hatch cover to be constructed of aluminum and shall have a 2 in. downward edge, stainless steel hardware and locking mechanism.
2. The area under the access tube shall be provided with a galvanized drip pan to prevent condensation from dripping onto the concrete floor slab below. The drip pan shall extend 3 in. beyond the drip line of the access tube. A 3/4 in. PVC drain pipe shall be provided to drain condensate to the overflow. Bidder may replace drip pan with a 2" x 2" channel to collect condensation.

I. Roof Railing

1. A 42 in. high roof handrail shall be provided to enclose all centrally located roof accessories. The roof railing shall be a minimum of 18 ft. in diameter.
2. Handrails and anchorages shall be designed and constructed for a concentrated load of 200 pounds applied at any point and in any direction. Handrails shall also be designed and constructed for a uniform load of 50 pounds per foot applied in any direction. The concentrated and uniform loading conditions shall not be applied simultaneously.

J. Rigging Access

1. Provide a 24 in. x 36 in. opening at the top of the support wall. This opening shall be accessible from a platform and shall provide access to the exterior rigging rail located at the tank/support wall intersection. The access opening shall be provided with a hinged stainless steel cover or a removable vent.

2. A minimum 30 in. diameter opening shall be provided on the tank roof to provide access to the tank interior rigging rail.

K. Rigging Rails

1. Provide permanently installed rigging rails suitable for rolling trolleys at the interior of the tank at the wall/roof and access tube/roof connections. Provide an exterior rigging rail at the base of the tank adjacent to the support structure.
2. Provide permanent lugs, couplings and rails required for painter's rigging to access all interior and exterior surfaces of the elevated tank and accessories. Where installation of lugs on the floor and roof at the elevated tank centerline is obstructed by the inlet-outlet pipe, provide, as a minimum, three rings of waterproof threaded couplings (painter's spuds) in the elevated tank roof and any

required floor lugs. Locate one ring for access to the shell and one intermediate ring.

G. Provide any and all supporting or anchoring attachments, sleeves, nipples, casings, etc. which are welded to the elevated tank for use in association with the electrical equipment, tank grounding system, communication equipment, and any cables, conduits, pipes, etc. This is not limited to items listed herein or shown on the drawings.

1. Supports shall be provided for five 1-1/4-inch diameter and one 2-1/2-inch diameter conduits from upper end of ladder to the handrail at the center of the tank roof. Brackets shall be galvanized steel channel (Uni-Strut or equal).
3. Lugs at exterior base of elevated tank for electrical grounding.
4. Support for electrical box near pressure sensing tap at base of tank.

H. Provide pressure gauges with transmitters where indicated on the drawings. Contractor shall tap pipelines and shall install a ½" gauge cock to receive ½" pressure gauge fittings. The fittings shall include a pet cock for air bleed off located below the gauge and a shutoff valve to allow removal of the gauge. The gauges shall be Ashcroft Model T5500E, Weksler, or equal. Gauges shall have 4-1/2" diameter dial, black phenolic solid front case, ½" NPT lower stainless-steel connection, 0.5% accuracy, overload safety stop. The gauges shall have diaphragm seals and the seals shall be Ashcroft Type 500 or equal.

2.07 VENTS

A. Tank Ventilation - A tank vent shall be provided, located near the center on the tank roof above the maximum weir crest elevation. It shall consist of a support frame, screened area and cap. The support shall be fastened to a flanged opening in the tank roof. The vent cap shall be provided with sufficient overhang to prevent the entrance of wind driven debris and precipitation. A minimum of 4 in. shall be provided between the roof surface and the vent cap.

B. The tank vent shall have an intake and relief capacity sized to prevent excessive pressure differential during the maximum flow rate of water, either entering or leaving the tank. The overflow pipe will not be considered as a vent. The maximum flow rate of water exiting the tank shall be calculated assuming a break in the inlet/outlet at grade when the tank is full. The vent shall be provided with an insect screen. Vent capacity shall be determined based on open area provided by the screen.

C. Support Structure Ventilation - As a minimum, one louvered vent shall be provided at the top of the concrete support structure. This vent shall be accessible from the upper platform and may also be designed to provide access to the exterior rigging rails located at the welded steel tank/concrete support structure intersection. Vents shall be galvanized steel with stainless steel or aluminum insect screen.

D. The vent shall have No. 24 mesh non-corrodible screens and shall be designed to relieve any pressure or vacuum in the event the screen frosts over or is otherwise clogged. The vent shall be easily dismantled to remove the screens for cleaning.

E. The lowest point of air intake for the vent shall be a minimum of 24” above the roof of the tank.

2.08 ELECTRICAL AND LIGHTING

A. Electrical work shall be in accordance with Division 26.

B. Provide a lightning protection system for the elevated tank structure and any roof mounted equipment that may be damaged by lightning.

C. Minimum requirements include two 28 strand by 14 gauge copper conductors bonded to the steel tank 180 degrees apart. The conductors shall be fastened to the interior support wall at 3 foot minimum spacing, and shall terminate with buried 5/8-inch diameter by 8 foot long copper clad ground rods.

D. Obstruction lighting shall be provided in accordance with FAA standards. The obstruction light shall be centrally located on the roof of the tank above all permanent installations. It shall be a steady burning, dual fixture type with a lamp-out relay switch. The fixture shall be weather sealed, corrosion resistant, with aluminum base and housing. Red globes with 116-watt clear traffic signal lamps rated at 8000-hour life shall be provided. A pilot light located near the electrical panel shall be provided to indicate when the primary bulb has failed.

E. Lightning protection for obstruction lights shall consist of an air terminal mounted on the support and formed to fit around the fixture. The 1/2-inch diameter copper air terminal shall extend a minimum of 10 inches above the light fixture and shall connect to a copper conductor that terminates in a bonding plate secured to the tank roof.

2.09 STEEL PIPING

A. Influent and Effluent Pipes - Provide a 16-inch diameter influent and a 16-diameter effluent pipe that extends from the base of the support structure to the tank floor elevation. Provide a minimum 6 in. high removable silt stop where the inlet/outlet pipe enters the tank. The bottom capacity level of the tank's operating range shall be at or above the elevation of the top of the silt stop. Pipe material within the support structure shall be Schedule 10S Type 304L stainless steel. Piping below the grade slab shall be flanged cement lined ductile iron suitably restrained to prevent movement.

The influent and effluent pipes shall be designed to support all related static and dynamic loads. Suitable galvanized steel brackets, guides and hangers shall be provided on the support wall and tank floor at intervals not exceeding 20 feet.

The influent and effluent pipes shall be designed and constructed to accommodate any differential movement caused by settlement and by thermal expansion and contraction over the range of extreme temperature differences expected for the support wall and pipe. The required flexibility shall be provided by an expansion joint located near grade in the vertical section of pipe.

Riser influent pipe shall extend to 20’ above bottom capacity line. Riser effluent pipe shall be 1’-0” minimum above bottom of bowl. Influent and effluent riser pipe shall be insulated with rigid thermal fiberglass and jacket from the ground level to bottom of the bowl.

B. Overflow Pipe - Provide a 16-inch diameter stainless steel overflow pipe. The top of the overflow shall be located within the tank at the overflow elevation. It shall run vertically beside the central access tube and extend through the tank floor, at which point it shall turn 90° and run under the tank floor to the support wall. This horizontal run shall be sloped to drain. The pipe shall then turn 90° and run vertically beside the support wall to grade. A base elbow shall direct the overflow through the support wall, where the pipe shall be terminated with a flap valve. Pipe material within the support structure shall be Type 304L (minimum 11 gauge) stainless steel. If the top of overflow is located above top capacity level, the tank shall be designed for the additional capacity provided by the difference.

The entrance to the overflow pipe shall be designed for the maximum inlet flow rate. The design shall be based on the water level cresting within 6 in. above the overflow elevation. A weir shall be provided if the entrance capacity of the overflow pipe diameter is not adequate. The Contractor’s standard vortex prevention device shall also be used.

The overflow shall be designed to support all related static and dynamic loads. Suitable galvanized steel brackets, guides and hangers shall be provided on the support wall and tank floor at intervals not exceeding 20 ft. The overflow pipe and weir section within the tank shall be carbon steel and supported by the central access tube.

The overflow pipe shall be designed and constructed to accommodate any differential movement caused by settlement and by thermal expansion and contraction over the range of extreme temperature differences expected for the support wall and pipe. A layout with sufficient upper offset to accommodate differential movement is acceptable. If this method is not applicable, the required flexibility shall be provided by an expansion joint located near grade in the vertical section of pipe.

C. The overflow pipe shall penetrate the support wall approximately between 1’-0” and 2’-0” above grade and discharge through a flap valve onto a 5 ft. wide x 15 ft. concrete splash pad.

D. Stainless Steel Requirements - Pipe and fittings shall be Type 304L stainless steel (minimum 11 gauge) fabricated from material meeting the requirements of ASTM A240. Fabrication, inspection, testing, marking and certification of

pipe and fittings shall be in accordance with ASTM A778 and A774, respectively. Backing flanges shall be in accordance with ASTM A285-C drilled to ANSI B16.5 Class 150.

Pipe, fittings and flange thickness shall be in accordance with the manufacturers certified pressure rating for the applicable service pressures.

Refer to Section 40 05 24 - Fabricated Welded Steel Pipe and Fittings.

2.10 DUCTILE IRON PIPE AND FITTINGS

A. Refer to Section 33 14 16 – Public Water Utility Distribution Piping.

2.11 GATE VALVES

A. Refer to Section 40 05 53 - Valves.

2.12 CHECK VALVES

A. Refer to Section 40 05 53 - Valves.

2.13 STEEL TANK PAINTING

A. Refer to Section 09 96 00 – High Performance Coatings.

2.14 Logo paint colors are attached in Appendix E. Logo to be placed on the South face of the water tower. Tank manufacturer to recommend appropriate size of logo which will be approved by the Owner/Engineer during construction. Tank manufacturer shall provide the cost to paint the appropriate size logo in their base bid.

2.15 SOURCE QUALITY CONTROL

A. Review mill test certifications of all steel plate, structural components and reinforcement to ensure compliance with specification requirements.

B. Provide inspection of shop fabricated components in accordance with AWWA D107, Section 9, “Inspection and Testing”.

PART 3 EXECUTION

3.01 EXAMINATION

A. Upon arrival at job site, the Contractor shall verify that the site conditions are in accordance with manufacturer's submittal drawings.

B. Upon delivery, inspect shipment for damage or completeness. Immediately notify manufacturer of damaged or missing parts.

C. Excavation

1. The foundation bearing surface and excavation shall be inspected by a representative of the geotechnical engineer prior to foundation

construction. Verification of the applicable design and construction recommendations is required. The geotechnical engineer shall be retained by the Contractor. After verification of the foundation bearing surface, provide a 2 in. thick concrete working slab within the lower excavation limits. Grade the site to prevent runoff from entering the excavation.

D. Environmental Conditions
   1. Prior to performing any work, verify the expected temperature, humidity and weather conditions are within the specified limitations for executing the work.

E. Elevated Tank Components
   1. After completion of each major component and prior to proceeding with the next stage of construction, verify that tolerance inspections and material quality control tests conform to this specification.

3.02 PREPARATION

A. Prior to installation, perform all necessary cleaning, field verification of dimensions, sizes, etc. and obtain all tools and materials, etc. required for proper installation. Review the manufacturer's installation instructions and recommendations, and the drawings.

3.03 FABRICATION AND ERECTION

A. Erect in conformance with AWWA D107, the manufacturers instructions and recommendations, and the drawings.

B. Reinforcement
   1. Fabrication, placement, development and splicing of reinforcement shall be in accordance with ACI 318 and ACI 117.
   2. Concrete proportioning, production, placement, quality control and curing procedures shall comply with ACI 318 and ACI 117. Concrete shall satisfy the specific structural, durability and architectural requirements of the completed components.
   3. Concrete support structure reinforcement shall be installed with plastic supports. Maximum spacing of supports for welded wire fabric shall be 5 ft. centers, horizontal and vertically.

C. Architectural Concrete Construction
   1. The exposed exterior surface of the concrete support structure is designated as architectural concrete. The concrete and formwork requirements of this Section shall be strictly enforced to ensure concrete of the highest practicable structural and architectural standard. Concrete proportioning, placing and finishing shall be in accordance with the ACI 301, Chapter 18, except as modified by this Section. Formwork design, installation and removal shall comply with the minimum requirements of ACI 318 and ACI 117 and with the

applicable requirements of ACI 347 and ACI 371R, except as modified by this Section.

2. Attention shall be given to ensure the same concrete design mix is used throughout the concrete support structure. The proportion, type and source of cement and aggregates shall not be changed. Uniform moisture content and placing consistency shall be maintained.
3. Drop chutes shall be used in all wall concreting operations where concrete placement is 5 ft. and greater in drop height. Concrete shall be placed directly between reinforcement layers to prevent aggregate segregation and form splatter with the resulting finish variations.
4. Forming systems not designed for lateral pressures associated with full height plastic concrete head shall be designed with the provision of ties and bracing such that concrete components conform to the correct dimensions, shape, alignment and elevation without leakage of mortar. Formwork systems shall be designed to safely support all loading conditions. Embedded items shall be properly positioned and secured. Form surfaces shall be cleaned of foreign materials and coated with a release agent prior to placing reinforcement. Do not allow excessive release agent to accumulate on the form. Steel forms shall be coated with non-staining, rust preventative form oil or otherwise protected.
5. The forming system for the concrete support structure wall shall be fully engineered and detailed with procedures to meet the increased demands of architectural concrete. The concrete support structure shall be constructed with a jump form process using form segments prefabricated to match the wall curvature. Concrete pour height shall be a minimum of 4 ft. and a maximum of 12 ft. Form panels shall extend the full height of the concrete pour using only vertical panel joints. Form systems that are designed to lap the previous wall pour shall be sealed to prevent grout leakage. Form system shall incorporate a positive means of adjustment to maintain dimensional tolerances specified herein. Panels shall be designed for lateral pressures associated with full height plastic concrete head; support and bracing shall be provided for construction related impact loads and wind loads. Working platforms that allow safe access for inspection and concrete placement shall be provided. Form facing material shall be metal, or plywood faced with plastic or fiberglass.
6. The form system shall incorporate a uniform pattern of vertical and horizontal rustications to provide architectural relief to the exterior wall surface. Rustication strips shall be attached to the form face to minimize potential grout leakage that results in broken corners, color variations and rock pockets. All construction joints and panel joints shall be located in rustications. Vertical panel joints shall be sealed using closures that combine with the form pattern to prevent grout leakage and panel joint lines. All joints shall be grout tight in order to prevent leakage during concrete placement. The vertical and horizontal rustications shall be proportioned and combined to impart a symmetrical architectural pattern to the completed structure. No architectural form treatment is required on the interior surface.
7. Wall forms shall not be disturbed or removed until the concrete has attained sufficient strength to prevent forming operations or

environmental loads from causing surface damage or excessive stress. Support wall concreting operations shall occur a maximum of once per day. Forms are to be removed and the concrete finish inspected prior to the subsequent placement of the next wall pour. Multiple form movements and concrete placements within a day are not permitted Form removal shall be based on early age concrete strength testing. The minimum concrete strength shall be established by the Contractor, based on an analysis of stress at critical stages throughout the forming and concrete operations. Early age concrete testing shall be in accordance with ACI 228.1R-95. Pull Out testing in accordance with ASTM C 900-99, Maturity Method testing in accordance with ASTM C 1074-93, or field cured cylinders compressive strength tested in accordance with ASTM C 172 are the acceptable methods to determine early concrete strength.

8. The structural floor system shall be designed to support all temporary construction loads. Adequate shoring and bracing shall be provided to transfer loads without appreciable movements. Shoring and forms for the structural dome slab shall remain in place until the concrete has gained sufficient strength to carry the floor weight without damaging deflections. A system of precast segments, concreted and structurally tied together can be used in lieu of cast in place.

D. Concrete
   1. Weather
      a. Concrete shall not be placed during precipitation or extreme temperatures unless protection is provided.
      b. During cold weather the recommendations of ACI 306 shall be followed.
      c. During hot weather the recommendations of ACI 305 shall be followed.
   2. Finish
      a. Provide a smooth form finish without rub for the interior and exterior support wall. Tie holes shall be plugged using grout on the interior and manufactured plugs on the exterior which match the color of the cured concrete as closely as possible. Provide a light sandblast to the exposed exterior concrete support wall surface.

E. Steel Tank
   1. Welding
      a. Welding procedures and general welding requirements shall be in accordance with AWWA D107, Section 9.5, "Welding".
      b. No structural welding is permitted to any steel embedded in hardened concrete, unless the weld is at least 2 ft. from the embedment interface.
      c. Grinding of weld contour shall approximate Condition "D" of NACE Standard RP017.
      d. All welders shall be qualified by ASME Section IX requirements for all positions. In addition, the tank contractor shall employ the services of a welding supervisor independent of the tank erection foreman's jurisdiction.

e. All welded joints on the tank or pedestal including the underside of roof lap joints, structural framing and accessory brackets shall be seal welded all around as a minimum.

f. Welds attaching components to the tank interior and to the interior of the supporting pedestal which are subjected to condensation shall be seal welded as a minimum.

g. Any and all supporting or anchoring attachments, sleeves, nipples, casings, etc. which are welded to the tank for use in association with the cathodic protection system, electrical equipment, tank grounding system, communication equipment, and any cables, conduits, pipes, etc. This is not limited to items listed herein or shown on the drawings. The tank manufacturer shall coordinate with each of the individual disciplines involved to ensure no attachments are omitted.

2. Layout, cutting, forming, edge preparation and workmanship for steel tank components and fabrications shall be in accordance with AWWA D107, Section 5.4, "Fabrication and Construction Requirements". To ensure an aesthetically pleasing tank and minimize mold growth the design of the cone and shell plate(s) shall minimize the number and total length of visible weld seams (shop and field). A scaled plate layout sketch must be provided with the bid, or be cause for rejection, noting that the use of any cone or shell plate (excluding roof plates) with widths and/or lengths equal to or less than 8’ x 19’ for the cone and 8’ x 34’ for the shell is unacceptable.

3. Steel tank erection procedures and general requirements shall be in accordance with AWWA D107, Section 5.4, "Fabrication and Construction Requirements".

3.04 TOLERANCES

A. SUPPORT STRUCTURE CONCRETE

1. Support structure concrete construction shall conform to the following:

a. Variation in thickness
Wall -3.0% to +5.0%
Dome -6.0% to +10.0%

b. Concrete support structure variation from plumb:

in any 10 ft. of height	-	1 in.
in any 50 ft. of height	-	2 in.
maximum in total height	-	3 in.

c. Concrete support structure diameter variation - 0.4% (not to exceed 3 in.)

d. Dome floor radius variation - 1.0%

e. Level alignment variation:

from specified elevation	-	1 in.
from horizontal plane	-	1/2 in.

f. The offset between adjacent pieces of formwork facing material shall not exceed the following:

Exterior exposed surfaces	-	1/8 in.
Interior exposed surfaces	-	1/4 in.
Unexposed surfaces	-	1/2 in.

B. STEEL TANK

1. Steel tank tolerances shall be in accordance with the requirements of API 650, Section 5.5.
2. Steel cone shall be constructed to the following tolerance. The deviation from the theoretical conical surface shall not exceed 0.032 $\sqrt{RT}$, when measured in the radial direction over length $4\sqrt{RT}$, where R is the radius normal to the plate surface at the point of consideration, and T is the plate thickness.
3. Plate Squareness: During fabrication, after each segment is cut or burned, but before forming, both plate diagonals shall be measured. The difference shall not exceed 1/8-inch.
4. Curvature: After each cylindrical segment is formed, 36-inch long sweep boards shall be used to measure the horizontal contour at the upper and lower edges, and the approximate center of each cylindrical segment. Gaps shall not appear between the sweep board and the fabricated cylindrical segment in excess of 1/8-inch, in any 36 inches of arc. Contractor shall provide sweep boards required for checking cylindrical segments after plates are delivered to erection site.
5. Roundness: Differences between minimum and maximum vessel diameters shall not exceed two-tenths of one percent of the theoretical.
6. Levelness: The maximum out of levelness of the top of a shell ring relative to the bottom of the shell shall not exceed one-quarter of one percent of the total tank height at that shell ring.
7. Plumbness: The cylindrical portion of the storage tank shell shall be plumb within one-half of one percent of the shell height. Each ring of the storage tank shall be plumb overall within one-half of one percent of the ring height.
8. Peaking and Banding: Shall not exceed 1/2-inch when measured with a 36-inch sweep board after erection. Contractor shall provide sweep boards required to measure peaking and banding.
9. Plate Misalignment
   a. Center aligned plates.
      1. Misalignment of plate centerlines for butt joints subject to primary stress shall be limited to the lesser of 0.125 inch or one-quarter of the thickness of the thinner plate for plates up to two inches thick and the lesser of 0.375 inch or one-sixteenth of the thickness of the thinner plate for plates greater than two inches thick.
      2. Misalignment of plate centerlines for butt joints subject to secondary stress shall be limited to the lesser of 0.1875 inch or one-quarter of the thickness of the thinner plate for plates up to one and one-half inches thick and the lesser of 0.750 inch or one-eighth of the

thickness of the thinner plate for plates greater than one and one-half inches thick.

b. Edge aligned plates. Edge misalignment is the distance that the edge of the thinner plate in the joint extends beyond the edge of the thicker.
   1. Plate edge misalignment for butt joints subject to primary stress shall be limited to the lesser of 0.0625 inch or one-tenth of the thickness of the thinner plate for plates 0.625 inch thick or thinner and to the lesser of 0.125 inch or one-tenth of the thickness of the thinner plate for plates greater than 0.625 inch thick.
   2. Plate edge misalignment for butt joints subject to secondary stress shall be limited to the lesser of 0.125 inch or one-fifth of the thickness of the thinner plate.

H. General Elevations: Miscellaneous supports shall be located ±1-inch of the theoretical elevations as shown on the Drawings.

I. All clips, lugs, rafters or columns attached by welding to the elevated tank or accessories, for the purpose of fabrication or field erection, shall be removed and any noticeable projections of weld metal shall be removed from the plate. The plate must not be gouged or torn in the process of removing lugs.

J. All sharp edges and corners shall be dulled. All weld spatter, burrs, sharp peaks, sharp ridges, undercutting, embedded pieces of electrode or wire, and slag shall be removed by chipping, grinding or brushing.

K. All welded joints on the elevated tank, including the underside of roof lap joints, structural members and accessory brackets, shall be seal welded as a minimum. All carbon steel surfaces that are inaccessible with respect to the specified surface preparation and painting after completion of the elevated tank shall be enclosed by seal welding as a minimum to prevent exposure of these surfaces to potable water, potable water vapor, or the elements.

L. Bolts attaching components other than the inlet-outlet pipe fittings to the elevated tank interior shall be seal welded at all mating surfaces.

3.05 PAINTING

A. Refer to Section 09 96 00 - High Performance Coatings for painting and surface preparation requirements.

B. Tank shall be shop primed.

C. Nameplate shall be installed after painting of the storage tank exterior is completed.

D. Roof vent screens and ladder fall prevention system shall be installed after painting is completed.

3.06 INSPECTION AND TESTING

A. The Engineer and Owner reserve the right to designate an independent quality assurance inspector for shop and field inspections.

B. Concrete Testing and Inspection

1. The evaluation and acceptance of concrete shall be in accordance with Section 5.6 of ACI 318 and ACI 117, except as modified in this Section.
2. Three cylinders shall be made from each sample required. A 7-day compressive strength test shall be used to supplement the 28 day tests.
3. Slump, air, temperature and compressive cylinder testing shall be performed by an independent laboratory. The Contractor shall retain the independent laboratory and provide the Contractor with copies of all test results.
4. The concrete support structure radius, plumbness and thickness shall be verified for each concrete lift at 45 degree intervals. An inspection report by the Contractor shall be provided to the Owner at project completion.

C. Welded Steel Water Tank Testing & Inspection

1. Inspection procedures for the welded steel tank shall be as required by AWWA D107, Section 9, "Inspection and Testing". Radiographic inspection of full penetration butt-welded joints shall be made by an independent inspection company retained by the Contractor.
2. Conical sections of the welded steel water tank designed using Method 2 or Method 3 of AWWA D107 shall be inspected in accordance with Section 9.4 of AWWA D107.
3. Weld joints of plate over the structural concrete floor shall be tested for leaks by vacuum box/soap solution testing, or equivalent method.
4. Use the radiographic method of weld inspection for all complete joint penetration welded-shell butt joints. At primary stress points that cannot be radiographed, use air carbon arc gouging. The sectional segment method of weld inspection is not acceptable.
5. A written report of field inspection is required per AWWA. The radiographic film shall become the property of the Owner. This report and film shall be submitted to the Engineer.

D. The piping assemblies from 3 feet outside the foundation wall to the tank shall be hydrostatic tested at 100 psi with no loss in pressure for a one-hour duration test. The test shall be conducted after welding of the pipe and collar

to the storage tank floor. The test results shall be submitted to the Engineer on a completed Pipe Line Pressure Testing Record form as included in the Contract Documents.

E. The storage tank shall be tested for leaks in accordance with AWWA with the following modifications and additions.
   1. Test of shell and roof performed by filling tank with water may be performed after painting is complete and inspected. Test may be coordinated with filling of tank for disinfections.

3.07 DISINFECTION

A. General -The Contractor shall disinfect steel tanks, and associated piping in accordance with AWWA specifications C651, C652 and C653.

B. Steel Tanks
   1. Disinfection shall not take place until all interior work is completed and all debris has been removed. The final coat of interior paint shall have fully cured prior to filling the tank with water. If so needed, the entire inside surface of the tank shall be washed down and the water removed before beginning the disinfection procedure.
   1. Disinfection shall be in compliance with AWWA Standard C652-11 "Disinfection of Water-Storage Facilities." However, disinfection shall not be considered satisfactory until samples of water have been taken from the tank and tested to demonstrate and record the good sanitary condition of the water in the tank. Sampling procedures and testing results shall meet the requirements for public water supplies as issued by the Missouri Department of Health and Senior Services. If the sanitary conditions are not found to be satisfactory, disinfection shall be repeated until satisfactory samples have been obtained. When satisfactory samples have been obtained, the tank may be put into service without draining. Sampling will be Contractor's responsibility.
   3. The elevated tank shall be disinfected by the use of Chlorination Method 3 of AWWA C652. This method requires an initial filling of 5 percent of the elevated tank capacity with water containing 50 mg/L available chlorine.
   4. The Owner will furnish the water for filling the tank two times; once for disinfection, once to place the tank in service. If, however, the water samples obtained are unsatisfactory, it shall be the Contractor's responsibility to pay the Owner for the water furnished for any additional filling operation at water rates in effect at the time of filling.

C. Piping - Contractor shall disinfect proposed piping. Disinfection shall be in accordance with provisions outlined in Minimum Design Standards for Missouri Community Water Systems and AWWA C651. Where conflicts exist between the two specifications, the more stringent requirements shall govern.

3.08 WARRANTY

A. A first anniversary inspection shall be conducted by the Owner, Contractor, and Engineer at least 30 days prior to expiration of the warranty period. The inspection shall be conducted in accordance with AWWA standards.

END OF SECTION 13 21 10

CITY OF GRAIN VALLEY

WATER TOWER UPGRADE

DIVISION 26 – ELECTRICAL

TABLE OF CONTENTS

SECTION NUMBER	SECTION TITLE	PAGE NUMBER
26 01 26	Testing Electrical Systems	26 01 26 1-3
26 05 00	Common Work Results for Electrical	26 05 00 1-5
26 05 19	Low-Voltage Electrical Power Conductors and Cables	26 05 19 1-6
26 05 26	Grounding and Bonding for Electrical Systems	26 05 26 1-8
26 05 29	Hangers and Supports for Electrical Systems	26 05 29 1-3
26 05 33	Raceway and Boxes for Electrical Systems	26 05 33 1-8
26 05 53	Identification for Electrical Systems	26 05 53 1-3
26 27 26	Wiring Devices	26 27 26 1-5
26 27 30	Mini Power Centers	26 27 30 1-4
26 28 16	Enclosed Switches and Circuit Breakers	26 28 16 1-4

DIVISION 26 – ELECTRICAL
Section 26 01 26 – Testing Electrical Systems

PART 1 GENERAL

1.01 RELATED DOCUMENTS

A. Drawings and general provisions on Contract, including General and Supplementary Conditions and Division 1 Specification Sections, apply to work of this Section.

B. Contractor shall note that this section shall be considered a Supplement to testing requirements outlined or described in other sections of these specifications.

1.02 WORK INCLUDES

A. Extent of Work as required by the Drawings and these Specifications

1.03 RELATED WORK

A. Specified elsewhere:
   1. Section 26 05 00 – Common Work Results for Electrical
   2. Section 26 05 19 – Low Voltage Conductors and Cables
   3. Section 26 05 26 - Grounding and Bonding for Electrical Systems
   4. Section 26 28 16 - Enclosed Switches and Circuit Breakers

1.04 QUALITY ASSURANCE

A. Regulatory Requirements
   1. Governing Codes:
      a. NFPA 70 – National Electrical Code (most current issue)

1.05 SUBMITTALS

A. Submit under provisions of Division 1.
   1. Test Reports:
      a. Test of entire electrical system as noted herein. Submit to the Engineer in triplicate.

PART 2 PRODUCTS

2.01 MATERIALS

A. Furnish all equipment, tools, manpower, and labor to perform specified testing.

PART 3 EXECUTION

3.01 TESTING

A. After wires and cables are in place and connected to devices and equipment, the system shall be tested for short circuits, improper grounds, and other faults. When fault condition is present, the trouble shall be rectified, then re-tested. Where cable is found defective or damaged, it shall be removed and replaced in entirety; do not field repair. Cost for correction shall be considered incidental to the project.

B. All wiring devices and electrical apparatus furnished under this contract, when ground or shorted on any integral “live” part, shall be removed and the trouble rectified by replacing all defective parts and materials. Cost of correction is considered incidental to the project.

C. All feeder cables and other power distribution apparatus shall have a Megger resistance test conducted to determine that insulation resistance is not less than that recommended by the manufacturer, or as noted below.

Unless otherwise recommended by the manufacturer, insulation resistance testing shall meet or exceed the following on 600 Volt equipment utilizing 500 Volt resistance test instrument:

Conductors .....50 Meg-Ohms
Motors…….5 Meg-Ohms
Switchboards, MCC’s and Panelboards.....25 Meg-Ohms
Power Transformers .....5 Meg-Ohms

D. Contractor shall furnish all tests and shall provide all test equipment, meters, instruments, cable connections or apparatus necessary for performing tests as specified herein. All costs for testing shall be considered incidental to this item and will not be paid for separately.

E. Examine connections to equipment for proper phase relationships. Rotate phase conductors as necessary in order to correct.

F. All motors shall be tested under Section 26 29 01. All motors shall be tested for correct direction of rotation. Run tests on all motors shall be tested for correct direction of rotation. Run tests on all motors and verify that proper overload devices have been installed. Coordinate this task with motor supplier.

G. Testing of Ground System

1. Each and all grounded cases and metal parts associated with electrical equipment shall be tested for continuity of connection with the ground bus system by the Contractor in the presence of the Engineer or his representative.
2. All grounding electrode conductors brought in from the ground field shall be tested for satisfactory continuity and by resistance measurement between the electrical equipment ground bus and the ground field. The grounding path shall not exceed 0.010 ohms.
3. Each Ground Field shall be tested for resistance to earth a “three-terminal” or “fall-of-potential” test as described in IEEE Standard #81. As an alternate, a specially designed clamp-on instrument such as AEMC Model 3710 (now superseded by Model 6416) or 3730 (now superseded by Model 6417) may be used if found acceptable to the engineer. Based upon measured field data, the Contractor shall calculate the ground field

resistance and furnish record copies to the Engineer and Owner for record. In no case shall the ground field resistance exceed 25 ohms. If the resistance is found to be higher than 25 ohms, one additional rod shall be driven with a minimum separation equal to the length of the ground rod used and connected in parallel with the rod under test.

4. Exterior ground field resistance testing shall not be measured during unusually wet weather and should be performed during normal weather and soil conditions. Any tests incorrectly performed or not performed to the satisfaction of the engineer will be repeated. Costs for all such re-testing shall be considered incidental to the project.

5. All specified maximums and minimums of this specifications must be met. Complete test records of all tests shall be made and shall show resistance values obtained and calculations of same, showing method of test and calculation.

3.02 CORRECTION OF DEFECTS

A. When tests disclose any unsatisfactory workmanship or equipment furnished under this contract, correct defects and retest. Repeat tests until satisfactory results are obtained.

B. When any wiring or equipment is damaged by tests, repair or replace such wiring or equipment. Test repaired items to ensure satisfactory operation.

END OF SECTION 26 01 26

PART 1 GENERAL

1.01 WORK INCLUDES

A. Work included in this section is general in nature and applicable to electrical system work. Contractor is also directed to other sections of Division 26 - Electrical for additional related specifications for items described in this section.

B. Work included in this section shall apply to installation and testing of all materials and equipment necessary to completely install electrical system as shown on drawings and as described herein in these specifications, or as may be necessary for a complete and operational electrical system.

C. Unless otherwise noted, all electrical equipment shown on project drawings shall be furnished under Division 26.

D. Drawings pertaining to this installation indicate general location of conduits, wiring, distribution and motor control centers, lighting and outlets, and other details necessary for installation of system.

E. Electrical installation as shown on drawings and as specified herein is based upon best available information, with regard to characteristics of mechanical equipment specified. In the event changes are necessary in order to accommodate mechanical equipment furnished, necessary revisions will be made with approval of Owner’s representative.

F. Any minor changes in location of equipment, to include conduits, outlets, etc., from those shown on drawings, shall be made without extra charge if so directed by Owner’s representative. These changes shall be any changes in location that, had new location been the bid-upon location, would not have resulted in an increase in contract construction cost over that actually bid.

G. All electrical equipment shall be installed in conformance with applicable sections of NPFA 70 - National Electrical Code, respective equipment manufacturer's directions, as detailed on drawings and as specified herein. Any installations which void U.L. listing (or other third-party listing) and/or manufacturer's warranty of a device or equipment shall NOT be permitted.

H. RELATED CONTRACT WORK DESCRIBED ELSEWHERE IN THESE SPECIFICATIONS:

Electrical Contractor shall note that it is not the intent of these Division 26 specifications herein to be all-inclusive of electrically related work to be performed as part of this contract.

Contractor shall also comply with electrical requirements in these sections of the specifications, including, but not limited to, wiring of motors, control panels furnished by others, HVAC equipment and all other electrically powered equipment

furnished by others under this project.

1.02 LAWS AND ORDINANCES

A. In installation of this work, Contractor shall comply in every respect with requirements of National Electrical Code (NEC), National Board of Fire Underwriters, and any state and local requirements, laws and ordinances as may be applicable.

B. If, in opinion of the Contractor, there is anything in drawings or specifications that will not strictly comply with above laws, ordinances and rules, the matter shall be referred to the attention of the Owner's representative for a decision before proceeding with that part of the work. No changes on drawings or in specifications shall be made without the full consent of Owner's representative.

C. Contractor shall obtain and pay for all licenses, permits and inspections required by above laws, ordinances and rules for entire electric wiring job called for in these specifications and accompanying drawings.

1.03 DRAWINGS

A. Drawings for electrical work will be a part of electrical drawings to which will be added, during the period of construction, any other detail drawings as may be necessary in opinion of Owner's representative, to show proper installation of various appliances or equipment with relation to project.

B. Drawings and specifications are intended to be descriptive only, and any error or omissions of detail in either shall not relieve Contractor from obligations thereunder to install in correct detail any and all materials necessary for complete and operating electrical systems to extent shown on drawings and described in this specification.

C. Contractor shall, during progress of job, record any and all changes or deviations from original drawings, and, at completion of project, shall deliver to Owner's representative a single marked-up set of "as-built" drawings.

1.04 SHOP AND ERECTION DRAWINGS

A. This Contractor shall prepare shop drawings for all parts of his work. Before commencing any work or providing any material, Contractor shall submit for approval of Owner's representative all drawings relating to construction, arrangement or disposition of equipment entering into contract, and show complete equipment with manufacturer's specifications of same.

B. Shop drawings of all distribution and motor control centers, panels, power and lighting systems, fixtures, wire, cables, devices, etc. shall be submitted for approval, as well as complete details of all systems not shown in detail on drawings.

C. Shop drawings shall be fully descriptive of all materials and equipment to be incorporated into this project. Contractor shall carefully check all submitted shop drawings, making sure they are complete in all details and cover specific items as hereinafter specified.

D. Shop drawings shall be submitted in sufficient quantity as required by the General Conditions.

E. No material or equipment shall be allowed at the site until shop drawings approved by the Engineer are received by the Resident Engineer at the site.

F. The following information shall be clearly marked on each shop drawing, catalog cut, pamphlet, specifications sheet, etc. submitted:

PROJECT TITLE:
BRANCH OF WORK: ELECTRICAL
NAME OF BUILDING OR LOCATION:
PAGE OF DRAWINGS OR SPECS WITH WHICH EQUIPMENT COMPLIES:
DATE:
SUBMITTED BY:

PART 2 PRODUCTS

2.01 PRODUCTS SHALL BE AS SPECIFIED IN OTHER SECTION AND AS DETAILED ON THE DRAWINGS

PART 3 EXECUTION

3.01 EQUIPMENT STORAGE

A. Except as indicated below, all electrical equipment considered to be a part of this contract shall be stored before installation in a warm, dry, indoor area so as to protect the equipment from physical damage, freezing, dirt and any other harmful effects.

B. The following electrical equipment shall be permitted to be stored outdoors on pallets or without direct contact with the earth, under tarpaulins or plastic covers:

1. Conduit. Does not include boxed fittings, etc., which shall be stored indoors.
2. Ground Rods.
3. Wire and Cable.
4. Strut-type framing members. Does not include boxed hardware, which shall be stored indoors.
5. Other electrical equipment not listed herein, with written approval of the Owner’s Authorized Representative.

C. The following electrical equipment shall be permitted to be stored exposed outdoors on pallets or without direct contact with the earth:

1. Other electrical equipment not listed herein, with written approval of the Owner’s Authorized Representative.

D. The installation of electrical equipment shall not begin until the structure, if required, within which the equipment is to be permanently housed, is complete

enough to provide protection from weather and vandalism (i.e. roof, windows and temporary padlockable or permanent doors installed).

E. The Contractor will be responsible for ensuring conformance with these procedures.

3.02 EQUIPMENT MOUNTING

A. All equipment and materials shall be installed and completed in a first-class workmanlike manner. The right is reserved to direct the removal and replacement of any item, which in the opinion of the Owner's Representative and/or Architect/Engineer does not present an orderly and reasonably neat or workmanlike appearance, provided such items can be properly installed in an orderly way by usual methods in such work.

B. The approximate location of all equipment and devices is shown on the Drawings. The Owner's Representative and/or Architect/Engineer reserves the right to change the location of all equipment or devices 6 ft in any direction at no additional cost provided such changes are requested before final installation.

C. Install all equipment with ample space allowed for removal and repair. Provide ready accessibility to removable parts of equipment and to all wiring without moving equipment which is installed or which is already in place. Provide access panels for all devices installed above non-accessible ceilings and/or within walls or partitions.

D. Install electrical equipment with due consideration to ventilating ducts, HVAC equipment, mechanical piping, etc., adjusting locations as necessary.

E. Electrical equipment shall be installed to maintain minimum clearances per Article 110 of NEC and ANSI C2 (National Electrical Safety Code.)

F. Electrical Contractor shall be responsible for furnishing and setting all anchor bolts required to install Electrical Contractor's equipment.

G. Where concrete mounting pads are required for electrical equipment mounting, Electrical Contractor shall furnish all concrete and form work necessary to complete the installation.

H. Where electrical equipment is located on damp or wet walls or locations as directed, it shall be "stand-off" mounted a minimum of ½" from wall in a manner so that rear of equipment is freely exposed to surrounding air. Method of mounting shall be approved by Owner’s representative before equipment is mounted.

I. Unless otherwise noted, top of safety-switches, control panels, and similar equipment shall be 5’-0” above finish floor or finish grade.

J. Enclosures for panelboards, switches or overcurrent devices shall not be used as junction boxes, auxiliary gutters or raceways for conductors feeding through or tapping-off to other switches or overcurrent devices, unless adequate space for this purpose is provided and the equipment is listed for this use.

K. In order to maintain NEC ratings and classifications of cables, do not combine conduit contents or modify conduit materials of construction unless specifically directed or shown otherwise on project documents.

L. Per NEC 300.11(A)(2), when independent electrical equipment support wires are installed within dropped-ceiling areas, they shall be distinguished by color, tagging, or other permanent effective means.

3.03 COORDINATION

A. Provide day-to-day coordination with the work of other contractors engaged in this project. Execute the work in a manner not to interfere with other Contractors, and vice-versa.

B. Coordinate with other contractors regarding the location and size of pipes, raceways, ducts, openings, devices, so that there may be no interferences between installation or of the progress of any contractor.

C. Coordinate installation of equipment and wiring with the established construction schedule.

D. Provide temporary platforms and handrails as required, to allow installation of electrical components and raceway systems.

3.04 PROTECTION OF WORK

A. Protect work from injury by keeping all conduit and boxes capped and plugged or otherwise protected. This includes damage by freezing and/or stoppage from building materials, sand, dirt, or concrete.

B. Protect all equipment and fixtures from damages during the project, provide all tarpaulins, drop cloths, barricades, temporary heaters or auxiliary equipment.

C. All materials or equipment damaged during construction shall be repaired or replaced with new items to the satisfaction of the Architect/Engineer.

END OF SECTION 26 05 00

PART 1 GENERAL

1.01 RELATED DOCUMENTS

A. Drawings and general provisions of the Contract, including General and Supplementary Conditions and Division 01 Specification Sections, apply to this Section.

1.02 SUMMARY

A. Work included in this section is supply of wire and cable to provide a complete and operational electrical system.

B. Any bid submitted to the Owner which contains cost adjustments for the current price of metals (copper and/or aluminum) will be rejected. Qualified bids in any form will not be considered.

C. Unless otherwise specified or detailed on the project drawings, all wire and cable shall be installed in conduit.

D. Unless otherwise specified or detailed on drawings, all wire and cable on this project shall be copper construction only.

E. Related Sections
1. Section 26 05 00 – Common Work Results for Electrical
2. Section 26 05 33 - Raceway and Boxes for Electrical Systems
3. Section 26 05 26 - Grounding and Bonding for Electrical Systems
4. Division 46 – Water and Wastewater Equipment

F. Reference to Standards
1. ANSI/NFPA 70 - National Electrical Code
2. U.L Standard No. 44 - Thermoset-Insulated Wires and Cables.
3. IPCEA Publication No. S-66-524.
4. Federal Specification J-C-30B
5. ASTM Specification B-8.

1.03 SUBMITTAL REQUIREMENTS

A. Submit under provisions of Division 01.

B. Contractor shall submit for all cable types and sizes used on this project.

1.04 QUALIFICATIONS

A. Wire and cable shall be manufactured and supplied by a company regularly engaged in business of furnishing wire and cable. If required by Owner's

representative, manufacturer shall submit a certification to a minimum experience of five years in manufacture of wire and cable.

1.05 DELIVERY, STORAGE AND HANDLING

A. Wire and cable shall be delivered on reels or coiled in boxes. Wire and cables shall be stored and handled to prevent damage to conductor and insulation.

1.06 MAINTENANCE SERVICE (WARRANTY)

A. All equipment shall be warranted to be free from defects in material and workmanship for period of one year from date of substantial completion established by the Owner.

PART 2 PRODUCTS

2.01 EQUIPMENT SPECIFICATION

A. THHN/THWN

Unless otherwise noted on the plans or specifications, all interior power wiring installed under this project shall be dual rated type THHN/THWN.

Cable shall be 600 Volt rated, sized as indicated on the drawings. Cable shall comply with Underwriters Laboratories Standard U.L. 83. Cables shall be rated 90°C in dry locations 75°C in wet locations. Conductors shall be annealed copper.

B. INSTRUMENTATION SHIELDED CABLE

(For use in Conduit)

Shielded instrumentation cable shall be used where required or shown on plans. Cable construction shall be #16 AWG tinned copper, polyethylene insulated, have #18 AWG stranded tinned copper drain wire and aluminum-polyester shield with 100% coverage. Overall jacket shall be polyvinyl Chloride (PVC). Cables shall be 60°C, 600 V rated and U.L. recognized.

1. 2-Conductor shielded instrumentation cable for use in conduit shall be Belden #8719, or equivalent.
2. 3-Conductor shielded instrumentation cable for use in conduit shall be Belden #8618, or equivalent.

2.02 COLOR CODING

A. Color code conductor insulation for #10 AWG or smaller conductors. Color code conductors #8 AWG or larger with colored tape or colored insulation. Standard colors:

	120/240V 1 Phase 3W	240 V or 208/120V 3 Phase 3 or 4W	480V 3 Phase 3 or 4W	240/120V 3 Phase 4W,)
Phase A	Black	Black	Brown	Black
Phase B	Red	Red	Orange	Orange (high leg)
Phase C	N/A	Blue	Yellow	Blue
Neutral	White	White	Gray	White
Ground	Green	Green	Green	Green

B. Intrinsically safe wiring shall be light blue color insulation per ANSI/ISA RP12.6 and NEC 504 or per respective equipment manufacturer's recommendations.

C. Control wiring insulation color shall be red.

D. 120 VAC control wiring from a separate source (for example, 120 V control wiring from a control panel that supplies a remote located starter) shall be with yellow color insulation.

E. 24 VDC wiring shall be Blue for Positive and White with Blue Stripe for Negative.

2.03 WIRE PULLING LUBRICANT

A. Pulling lubricant shall be UL listed, water based, polymer solution. Lubricants containing waxes, soaps or combustible materials are not acceptable. Contractor shall verify the compatibility of the selected cable pulling lubricant and cable jacket materials proposed. Manufacturers/Lubricants shall be as follows, or equivalent:

1. American Polywater - Polywater J
2. Ideal Industries - ClearGlide
3. American Colloid - Poly-X
4. Buchanan - Quick Slip
5. ARNCO – HydraLube

2.04 SPLICES AND JOINTS

A. Splices and joints shall be as described below, or approved equivalent.

B. Interior applications:

1. #8 and smaller conductors:
   a. Ideal "sing nut" type insulated connectors.
   b. Scotchlok R, B, and Y type insulated connectors.
2. #6 and larger conductors:

a. New construction: For straight line connections, use compression connector with rubber insulating cover or boot.
b. New construction: For “Tee” cable taps, use compression connector with rubber insulating cover or boot.
c. Existing construction: For taps in cabinets, gutters and other close locations, use O-Z/Gedney type XW & XWC, XTP & XTPC or, PMX &PMXC, or equivalent.

C. Exterior applications

Note that below grade splices in manholes, handholes and vaults will not be allowed on this project unless specifically shown on drawings. Conductors are to be pulled continuous end-to-end unless otherwise noted or directed by the Engineer in writing.

1. #8 and smaller conductors:
   a. Twist-on connectors pre-filled with silicone-based sealant to protect against moisture and corrosion. Units shall be UL 486D listed as weatherproof, waterproof and suitable for direct burial. Units shall be Ideal Industries “Underground” #64 or King Innovation “Dryconn King 6 Blue” Filled Waterproof Connectors, or equivalent.
2. #6 and larger conductors:
   a. NSI/Polaris ISRW Series “Blue”
   b. Ilsco Series USPA, DBK, SSK or PDSS

2.05 LINE MARKING TAPE

A. Where required or noted on the drawings, line marking tape shall be installed as specified in Section 26 05 41 - Underground Electrical Construction

PART 3 EXECUTION

3.01 INSTALLATION (WIRE CONDUCTORS)

A. Wire and cable shall be installed using accepted industry methods to prevent damage to conductors and insulation. Installation shall comply with all applicable sections of NEC regarding conduit fill.

B. No splices shall be permitted in conduit bodies. All splices shall be made in junction boxes, control panels and cabinets provided for that purpose as detailed or required by need.

C. Neatly train and lace wiring inside boxes, equipment and panelboards.

D. Drawings are diagrammatic in showing circuitry routing between devices and equipment. Provide all phase conductors, neutrals, switched and unswitched legs, grounds, etc., as required for a complete and operational electrical system.

E. All 120V circuits shall have individual neutral conductors. 120V circuits with “shared” neutral conductor shall not be permitted.

F. Minimum wire size shall be #12 unless otherwise noted. Where protected by 15A fuses, control wiring may be #14 AWG.

G. All conductors shall be continuous without splices except at locations approved for the purposes of splicing.

H. All wire sizes shall be stranded except where specifically approved otherwise.

I. All circuits shall be labeled in compliance with Section 26 05 53 – Identification for Electrical Systems.

J. Pulling eyes on conductors or a basket weave grip shall be used for pulling cable. Woven wire cable grips shall be used to pull all single conductor cable where pulling eyes are not available. Preferred method for pulling conductors is factory-installed eyes attached to conductors. All sharp points and edges on the hardware attaching the pulling rope to the cable shall be taped to prevent snagging or damaging the raceway.

K. When a cable grip or pulling eye is used for pulling, the area of the cable covered by the grip or seal plus 6 inches shall be cut off, and discarded when the pull is completed. When pulling loops are used, the entire loop shall be cut off and discarded when the pull is completed.

L. A non-binding type of swivel, or swivel connection shall be inserted between the pulling rope and the cable pulling eye, grip or loop to prevent twisting under strain and allow for free rotation of the cable during pulling.

M. The pulling tension of any cable shall not exceed the maximum tension recommended by the cable manufacturer. Pulling mechanisms of both the manual and power types shall have the rated capacity clearly marked on the equipment. Cable shall be installed using either hand-tension or by use of specially-designed “cable-tuggers”. Any cable pulled through conduit using trucks, back-hoe’s, earthmoving equipment or similar apparatus will be rejected and will be replaced with new cable at the Contractor’s expense.

N. Break-away shear-pins or other acceptable method of tension limitation shall be utilized on mechanical pulling equipment to prevent over-stressing cable during installation. To avoid insulation damage from excessive sidewall pressure at bends, the pulling tension, in pounds at a bend, shall not exceed 300 times the radius of the bend in feet.

O. As soon as the cable is pulled into place, the pulling eyes, cable grips, or pulling loops shall be removed. On exterior pulls, the remaining cable ends shall be temporarily resealed with either a minimum of three (3) wraps of 2" Scotch #23 rubber splicing tape or heat-shrink caps. Exposed cable ends shall be wrapped in such a manner to prevent unintentional water entry. Cable ends or seals shall be installed prior to the end of the workday.

P. Cable shall not be bent to a radius of less than 4 times the overall diameter, including installation apparatus.

Q. Cable supports and securing devices shall be installed to provide adequate support without deformation of the cable jackets or insulation.

R. Cables shall be routed within manholes and vaults such that adequate working space is provided within the structure for cable splicing and for the installation of future cables.

S. All damaged or rejected cable shall be removed from the project site and replaced at no additional expense to the project.

3.02 CONNECTIONS AND TERMINATIONS (WIRE CONDUCTORS)

A. Identify each conductor in panelboards, junction or pull boxes, or troughs with a permanent pressure sensitive label with suitable numbers or letters for easy recognition. Identify control wiring at each end and in junction boxes with numeric wire number corresponding to control wiring diagram.

B. Thoroughly clean wire before installing lugs and connectors.

C. Make splices, taps and terminations to carry full ampacity of conductors without perceptible temperature rise.

D. Terminate spare conductors with electrical tape, identify as “spares” and roll up in box.

3.03 TESTING (WIRE CONDUCTORS)

A. Inspect wiring for physical damage and proper connection.

B. All wire and cable shall be tested for continuity and short circuits prior to energizing circuits. Verify proper phasing, adjust as required.

C. CAT 6 Cable: Shall be tested in permanent link configuration. Testing shall be accomplished with a Level III test set with a minimum spectral frequency range of 1 to 250MHz. The test specifications for all installed cables must meet or exceed the specifications for CAT 6 cabling that are documented within the TIA/EIA- 568-C.1/2. Correct malfunctioning cables and retest to demonstrate compliance; otherwise remove and replace with new and retest. Typed or printed documentation must be provided listing all runs by location. The documentation must include the original instrument printouts detailing the results of all the tests. The documentation must also detail the date each cable was tested and the tester's name.

D. Comply with all applicable items in Section 26 01 26 and 26 05 00.

END OF SECTION 26 05 19

PART 1 GENERAL

1.01 RELATED DOCUMENTS

A. Furnish products listed and classified by Underwriters Laboratories, Inc., as suitable for purpose specified and shown.

1.02 Work under this item includes the electrical grounding and bonding of the service entrance gear, electrical distribution equipment, metallic raceways, metallic enclosures, utilization equipment and other appurtenances for the work or equipment to be furnished under this project. In general, all work shall meet or exceed that defined in article 250 of the national electrical code NEC/NFPA 70.

1.03 This specifications section neither replaces any NEC requirements, nor are any NEC requirements not specifically identified considered deleted from the scope of work. Items listed in this section are furnished to either augment or exceed those established by NEC.

1.04 SUMMARY

A. Equipment grounding conductors

B. Grounding Electrodes

C. Grounding Electrode Conductors

D. Bonding

E. Related Sections
   1. Section 26 05 00 – Common Work Results for Electrical
   2. Section 26 43 13 – Surge Protective Devices for Low Voltage Power Circuits

F. Reference to Standards
   1. Article 250; ANSI/NFPA 70 - National Electrical Code (NEC)
   2. NFPA 780 – Standard for the Installation of Lightning Protection Systems

1.05 SUBMITTALS

A. Submit under provisions of Division 01.
   1. Ground rods
   2. Exothermic welding components

1.06 QUALIFICATIONS (RESERVED)

1.07 QUALITY ASSURANCE (RESERVED)

1.08 DELIVERY, STORAGE AND HANDLING

A. Ground rods shall be tie-wrapped together and stored away from contact with the earth.

B. Exothermic welds and hardware items shall not be shipped loose but shall be in boxes, labeled with material and equipment enclosed. Boxes shall be stored away from contact with earth and shall be protected from weather.

1.09 REGULATORY REQUIREMENTS (RESERVED)

1.10 COORDINATION

A. Installation of all Grounding and Bonding shall be coordinated with other trades and Sub-Contractors. Special attention is required for installation of Concrete-Encased Electrodes within structural footings.

1.11 MAINTENANCE SERVICE (WARRANTY)

A. All equipment shall be warranted to be free from defects in material and workmanship for a period of one year from date of substantial completion established by the Owner.

1.12 EXTRA MATERIALS (SPARE PARTS) (RESERVED)

PART 2 PRODUCTS

2.01 MANUFACTURERS (RESERVED)

2.02 EQUIPMENT SPECIFICATION

A. Ground rods shall be UL listed, single-piece, 3/4" diameter by 10' long copper-clad steel with minimum 10 mil copper cladding.

All buried connections of grounding and bonding components shall be via exothermic weld only. Clamp or compression grounding connections below grade will be rejected and replaced at Contractor’s expense.

B. Exothermic Welding Equipment Manufacturers
1. Erico – Cadweld
2. Continental Industries – Therm-O-Weld
3. Hagar – Ultraweld

C. Grounding conductors shall be 600 volt, same insulation type as used for phase conductors, green in color unless otherwise noted.

D. Grounding electrode conductors in contact to earth shall be bare, stranded, annealed copper. Grounding Electrode Conductors shall be the larger of that detailed on the project drawings, specified herein or as required by NEC.

PART 3 EXECUTION

3.01 EXAMINATION (RESERVED)

3.02 PREPARATION (RESERVED)

3.03 INSTALLATION

A. A continuous grounding system shall be provided throughout the facility. The Contractor shall furnish and install all grounding and bonding as required per NEC and all Local Codes, whether or not specifically shown on the project drawings.

B. Except for separately derived systems, a single-point ground system is intended throughout the facility. So-called “Multi-point”, “independent”, “clean” or “separate” grounding systems that are not inter-bonded to the single-point facility system do not comply with NEC, are unsafe, and will be rejected.

1. On occasion, supplemental driven ground rods may be required on the project drawings. All such supplemental ground rods are to be bonded to the equipment grounding conductor and are NOT intended to indicate any separation of, or isolation from, the facility grounding system.

C. Equipment ground conductors (green insulated) shall be used solely for grounding and bonding purposes and be kept entirely separate from grounded neutral conductors (white insulation), except where bonded at the Service Entrance equipment.

1. The system Neutral and Ground conductors shall be bonded together through the Main Bonding Jumper in the Service Entrance Equipment only.
2. Unless otherwise directed on the project drawings, Grounding Electrode Conductors shall terminate on the Neutral Bus within the Service Entrance equipment.
3. The Main Bonding Jumper within the Service Entrance equipment shall be accessible for visual inspection.

D. Grounding Electrode System

1. As a minimum, the Grounding Electrodes shall comply with NEC Articles 250.52 and 250.53. Where present at each new building or structure, all available Grounding Electrodes defined in NEC Article 250.52A1 thru A4 shall be interconnected to form the Grounding Electrode System.
2. Per NEC Article 250.68A, the Grounding Electrode System shall be installed in such a manner that each connection point may be visually inspected, unless encased by concrete or earth.
3. Per NEC Article 250.64, Grounding Electrode Conductors shall be installed without splice between Service Entrance Equipment Neutral bar and Grounding Electrodes. Where required due to distance or construction, splicing shall be permitted by means of exothermic welding only. Irreversible “H” and “C” type compression connectors shall NOT be utilized for Grounding Electrode Conductors.

a. Where exposed or visible, all Grounding Electrode Conductors (regardless of size) shall be protected from physical damage using non-metallic conduit, such as Schedule 40 PVC. Extend protective conduit as close as practical to the Grounding Electrode. Any metallic conduits installed by the Contractor for grounding electrodes must be bonded at both ends per NEC Article 250.64E.

b. Where a copper Grounding Electrode System Bus-Bar is indicated on the project drawings, it shall be sized as noted but no less than ¼"T x 2"W x 24"L.. Size of the single copper Grounding Electrode Conductor between the Service Entrance Neutral Bus and the Grounding Electrode System Bus-Bar shall be the larger of that shown in NEC Table T250.66 or as noted on the project drawings. Connection of Grounding Electrode Conductors to a Grounding Electrode System Bus-Bar shall be through the use of listed compression-type lugs bolted to the Bus-Bar.

4. Grounding Electrode Conductors shall be individually installed from the Service Entrance Neutral Bus (or Grounding Electrode System Bus-Bar) to the respective Grounding Electrode. "Looping" of Grounding Electrode conductors (extending a suitably-sized single grounding electrode conductor from electrode-to-electrode) shall NOT be utilized without written approval from the Engineer.

5. Connection of Grounding Electrode Conductors to individual Grounding Electrodes shall comply with NEC Article 250.70.
   a. Connection at all Grounding Electrodes shall be by use of exothermic welding. Clamp or compression connection connections shall NOT be utilized without written approval from the Engineer.
   b. Below-grade ground rod and associated ground wire shall be clean and dry before performing the exothermic weld. Verify that the proper size and type of exothermic weld kit is used before beginning work
   c. Exothermic welds shall be left exposed for inspection and approval before backfilling or otherwise concealing. Any unacceptable exothermic welds shall be redone, including any necessary replacement material (ground rods, ground wires, etc.) as needed to provide an accepted exothermic weld.

6. Non-Metallic conduits containing grounding electrode conductors shall not be supported with metal clamps that completely encircle the conduit. Use nylon nuts, bolts, straps and/or reinforced fiberglass or premium grade plastic resin strut support with non-metallic hardware as manufactured by Aickinstrut, or equivalent.

7. All of the following shall be interconnected, where available:

a. Bond metallic underground water piping in direct contact with earth for no less than 10 feet per NEC Article 250.52A1. Size of the copper bonding jumper shall be the larger of that shown in NEC Table T250.66, or as noted on the project drawings. Installation shall comply with NEC Article 250.53. Connection shall be made at a point less than 5 feet from where the metallic water piping enters the facility. Furnish bonding around removable equipment (water meters, etc.) per NEC Article 250.68B.

i. Note that NEC Article 250.53D2 requires a Supplemental Grounding Electrode when a metallic underground water pipe is the sole Grounding Electrode. The Supplemental Grounding Electrode shall be one of those described in NEC Articles 250.52A2 through 250.52A7. See also paragraph 26 05 26-3.03F8 below.

b. Metal frames of building or structure shall be bonded per NEC Article 250.52A2. Size of the copper bonding jumper shall be the larger of that shown in NEC Table T250.66, or as noted on the project drawings. Installation shall comply with NEC Article 250.53.

c. Furnish concrete-encased electrodes (commonly called “Ufer” ground) per NEC Article 250.52A3 and install per NEC Article 250.53.

i. The size of the copper conductor which is the sole connection to the concrete-encased electrode shall be the larger of that shown on the project drawings or #4 AWG.

ii. The Concrete-Encased Electrode (CEE) shall be no less than #4 rebar (½” diameter) with a minimum length of 20 feet long placed in bottom of concrete footing encased by no less than 2” of concrete in direct contact with earth.

iii. Within the concrete encasement, connect the grounding electrode conductor to the re-bar by means of exothermic weld, Cadweld, or equivalent. Compression connections will not be accepted as an alternate termination method of connection within the concrete envelope.

iv. The Contractor shall provide all necessary coordination between the Sub-Contractors and trades for the implementation of this item before concrete is placed.

v. Do not use Insulated (plastic or epoxy coated) re-bar for concrete-encased electrodes. If the structural construction requires insulated or plastic-coated re-bar, add a minimum of 20 feet bare, non-coated re-bar to create the Grounding Electrode.

vi. For installations that may structurally utilize re-bar smaller than #4, tie-wrap a minimum of 20’ length of no smaller than #4 AWG bare copper Grounding Electrode to the re-bar in the bottom of the footing prior to installation of concrete.

d. Furnish a Grounding Electrode Ground-Ring only where specifically noted on the project drawings. Ground-Ring shall comply with NEC Article 250.52A4 requirements and be installed per NEC Article 250.53. Where utilized, all Ground-Rings must encircle the entire facility (form a closed-loop). Size of the copper Grounding Electrode Conductor which is the sole connection to the ground-loop shall be the larger of that shown on the project drawings or #2 AWG.

8. On projects where the only Grounding Electrode listed in NEC Article 250.52A through 250.52D is a metallic underground water pipe, it must be supplemented by another grounding electrode per NEC Article 250.53D2. Unless directed otherwise, the supplemental grounding electrode shall be a driven ground field.
   a. Ground field shall consist of a triangle 10 feet on each side, with a driven ground rod at each vertex of the triangle. Size of the copper Grounding Electrode Conductor, and the bonding jumpers between all ground rods, shall be the larger of that shown on the project drawings or #6 AWG.
   b. If required due to space constraints, furnish two (2) ground rods a minimum of 10 feet apart. Deviations from the triangular-shaped ground field shall require written approval by the Engineer prior to installation.

E. All metallic raceways, boxes, enclosures, etc. shall include an insulated equipment ground conductor. Due to corrosion, metallic raceway and conduit connectors alone WILL NOT be considered as meeting this requirement. The Equipment Grounding Conductor shall positively bond all electrical components and utilization equipment to the facility ground system.

F. All metallic boxes used for electrical equipment shall include listed grounding screws or lugs. No more than one grounding conductor shall be installed per lug location unless lug is listed for multiple conductors.

G. The largest factory-scored concentric conduit knockouts shall be used to provide conduit bonding to NEMA 1 & 3R enclosures.
   1. If required, provide a conduit reducing hub for the specific conduit size terminated.

H. Equipment Grounding Conductors shall be sizes as shown in NEC T250.122, but no less than #12 AWG.

I. Isolated, exposed metal conduit segments (e.g. within manhole or handhole) shall be bonded with a bare copper conductor sized from NEC T250.122. Bonding jumper size shall be based upon the largest ampacity circuit contained within.

J. Bonding of metallic components of manhole and handhole frames and lids as well as all exposed metal conduit sections of underground duct bank is covered under Specifications 26 05 41- Underground Electrical Construction.

K. All other exposed metal piping (e.g. air, fire-protection, natural gas, metallic process piping etc.) and exposed structural steel not used as a Grounding

Electrode shall be bonded to the Grounding Electrode System per NEC Article 250.104. Size of the copper bonding jumper shall be no smaller than that shown in NEC Table T250.66.

L. All communications systems described in NEC Chapter 8 shall be bonded to system ground. Installation shall comply with NEC Article 250.94 and Articles 800, 810, 820 and 830. Size of the copper bonding jumper shall be #6 AWG unless otherwise noted on the project drawings.

M. General Requirements for Separately Derived Systems (e.g. Two-Winding Transformers)

Solidly-Grounded Separately-Derived Systems shall be installed per NEC Article 250.30 requirements. In general, the following shall apply for solidly-grounded two-winding transformers unless specifically directed otherwise on the project drawings.

1. Primary Equipment Ground conductor shall terminate on transformer ground lug “G”.
2. Install the transformer “X0-G” link, or system bonding jumper, within the transformer housing only. Where the System Bonding Jumper consists of a field-installed copper conductor, it shall be sized to NEC Table 250.66 but not less than 12½% of the total cross-sectional area of the secondary phase conductors.
3. Secondary Neutral conductors shall be terminated on transformer “X0” Lug.
4. Secondary Equipment Ground conductors shall be terminated on transformer ground lug “G”.
5. Bond the transformer Neutral “XO” to the nearest grounding electrode in accordance with Article 250.30A7 of the NEC. The grounding electrode conductor shall be sized per Table 250.66, "Grounding Electrode Conductor for Alternating-Current Systems of the latest edition of NEC. Grounding Electrode conductor shall be installed in either non-metallic conduit (Schedule 40 PVC) or bonded at both ends of metallic conduit per NEC Article 250.64E.
6. Neutral and Ground Bus in all downstream equipment shall be kept isolated. Do not re-bond downstream unless required by special conditions, such as those described in NEC Article 250.32.

3.04 INTERFACE WITH OTHER SYSTEMS

A. Lightning Protection Systems shall be bonded per NEC Article 250.106. All Lightning Protection Systems shall be bonded to facility Grounding Electrode system on facility exterior. Isolated grounding for Lightning Protection Systems will not be allowed.

3.05 MANUFACTURER’S FIELD SERVICES (RESERVED)

3.06 TESTING

A. As described in Specifications Section 26 01 26.

B. All grounded metal cases and parts associated with electrical equipment shall be tested for continuity with ground system.

C. If requested, testing shall be performed in the presence of the Owner's representative.

D. Provide a copy of all testing reports to Engineer for record purposes.

END OF SECTION 26 05 26

PART 1 GENERAL

1.01 RELATED DOCUMENTS

A. Drawings and general provisions of the Contract, including General and Supplementary Conditions and Division 01 Specification Sections, apply to this Section.

1.02 SUMMARY

A. Strut-type framing for conduit and equipment supports

B. Cable Rack saddle-type supports

C. Anchors and Fasteners

D. Related Sections
   1. Section 26 05 00 – Common Work Results for Electrical

E. Reference to Standards
   1. ANSI/NFPA 70 - National Electrical Code.
   2. NECA - National Electrical Contractors Association.
   3. ASTM No. A570 G33
   4. ASTM No. A-123
   5. ASTM No. A-525
   6. Furnish products listed and classified by Underwriters Laboratories, Inc., as suitable for purpose specified and shown.

1.03 SUBMITTALS

A. Submit under provisions of Division 01.

B. Product Data: Provide manufacturer's catalog data for fastening systems and supports.

C. Manufacturer's instructions: Include application conditions and limitations for use stipulated by Product testing agency specified under Regulatory Requirements. Include instructions for storage, handling, protection, examination and installation of Product.

1.04 QUALIFICATIONS (RESERVED)

1.05 QUALITY ASSURANCE (RESERVED)

1.06 DELIVERY, STORAGE AND HANDLING

A. Stored conduit and equipment supports shall not be in contact with earth, but shall be on pallets or other above-grade supports. Conduit and equipment supports shall be covered to minimize exposure to weather.

B. Anchors and fasteners shall be stored in their original containers in a clean, dry place. They shall not be exposed to weather.

1.07 COORDINATION (RESERVED)

1.08 MAINTENANCE SERVICE (WARRANTY)

A. All equipment shall be warranted to be free from defects in material and workmanship for a period of one year from date of substantial completion established by the Owner.

1.09 EXTRA MATERIALS (SPARE PARTS) (RESERVED)

PART 2 PRODUCTS

2.01 MOUNTING STRUT

A. Where utilized, strut-type metal framing shall be provided to mount and support electrical equipment and enclosures as indicated on the drawings.

B. Strut-type supports shall be either aluminum or stainless-steel construction. Unless specifically identified for use on the drawings, painted or factory coated steel, galvanized steel or non-metallic strut are not acceptable alternates to this requirement. Use stainless steel on all project locations where strut is in direct physical contact with earth.

C. Unless specifically noted to be Type 316 Stainless Steel only, Stainless Steel strut-type metal framing may be Type 304 or Type 316 Stainless Steel.

D. Aluminum strut-type metal framing shall be Type 6063-T6 Aluminum.

E. All mounting hardware shall be stainless steel.

F. Manufacturers:

1. Unistrut: P-1000 EA (Aluminum), P-1000 SS (Stainless Steel)
2. B-Line: B22AL (Aluminum), B24SS (Stainless Steel)
3. Equivalent meeting specifications

2.02 CABLE RACKS

A. Cable racks within manholes, handholes and vaults shall be non-metallic saddle type construction as manufactured by Underground Devices, Inc.; Northbrook, IL, or equivalent. All mounting hardware shall be stainless steel.

PART 3 EXECUTION

3.01 EXAMINATION

A. Examine all supports and fasteners for straightness, rust and corrosion. Do not use any equipment that is not straight or is rusted or corroded.

3.02 PREPARATION

A. All equipment shall be clean at time of installation. Remove all burs.

3.03 INSTALLATION

A. Install products in conformance with manufacturer's instructions and as detailed in drawings.

B. Provide anchors, fasteners and supports in accordance with NECA Standard of Installation. Do not use spring steel clips or clamps except as noted in Section 26 05 29-3.03H.

C. Do not fasten supports to pipes (except where detailed on drawings), ducts, mechanical equipment (except where detailed on drawings), or conduit.

D. Install surface mounted cabinets, enclosures and panelboards with a minimum of four anchors.

E. Provide materials, sizes and types of anchors, fasteners, and supports necessary to carry loads of equipment and conduits. Consider weights of equipment and conduit when selecting products.

F. Provide all necessary hardware, such as floor flanges, in order to install equipment as specified or as shown on the drawings.

G. Include knee-braces and stiffeners as necessary to provide rigid support such that equipment does not bounce or sway.

H. Use spring-lock washers under all nuts.

3.04 INTERFACE WITH OTHER PRODUCTS (RESERVED)

3.05 MANUFACTURER'S FIELD SERVICES (RESERVED)

END OF SECTION 26 05 29

DIVISION 26 – ELECTRICAL
Section 26 05 33 – Raceway and Boxes
for Electrical Systems

PART 1 GENERAL

1.01 RELATED DOCUMENTS

A. Drawings and general provisions of the Contract, including General and Supplementary Conditions and Division 01 Specification Sections, apply to this Section.

1.02 SUMMARY

A. Work included in this section is conduits, raceways and fittings required for operation and maintenance of facility.

B. Related Sections
1. Division 11 – Equipment
2. Section 26 05 00 – Common Work Results for Electrical
3. Section 26 05 19 – Low Voltage Conductors and Cable
4. Section 26 05 29 – Hangers and Supports for Electrical Systems
5. Division 46 – Additional Water Equipment

C. Reference to Standards
1. Federal Specifications WW-C-581d
2. Federal Specifications WW-C-540c
3. Federal Specifications WC-1094-A
4. ANSI C80.1
5. ANSI C80.3
6. ANSI C80.5
7. ANSI/NEMA OS-1 – Sheet Steel Outlet Boxes, Device Boxes, Covers and Box Supports
8. UL 50 – Enclosures for Electrical Equipment
9. UL Standard UL-1 Standard for Flexible Metal Conduit
10. UL Standard UL-6 Electrical Rigid Metal Conduit – Steel
11. UL Standard UL-6A Electrical Rigid Metal Conduit – Aluminum, Red Brass and Stainless Steel
12. UL Standard UL-651 Standard for Schedule 40, 80, Type EB and a Rigid PVC Conduit and Fittings.
13. UL Standard UL-651A Schedule 40 and 80 High Density Polyethylene (HDPE) Conduit.
14. UL Standard UL-797 Electrical Metallic Tubing - Steel
15. UL Standard UL-1479 Standard for Fire Tests of Penetration Firestops.
16. NEMA RN1
17. NEMA RN2

18. NFPA 70 (NEC)
19. NEMA TC-2
20. NEMA TC-3
21. NEMA TC-7
22. NEMA 250

1.03 SUBMITTALS (SUBMIT ONLY ON TYPES APPLICABLE FOR PROJECT)

A. Submit under provisions of Division 01.

B. Schedule 40 Galvanized Rigid Steel Conduit

C. Schedule 40 Aluminum Rigid Conduit

D. Rigid PVC Conduit

E. Flexible Metal Conduit

F. Liquid Tight Flexible Metal Conduit

G. High-Density Polyethylene Conduit (Unit Duct)

H. Fittings and Conduit Bodies

I. Expansion/Deflection Fittings

J. Lay-In Wireway

K. Conduit Seals
1. Conduit Fire Stopping
2. Conduit Water Seals

1.04 QUALIFICATIONS

A. All materials shall be purchased new from suppliers/manufacturers regularly engaged in the business of electrical conduit, ducts and fittings.

B. Junction and pull boxes shall be manufactured and supplied by a company regularly engaged in business of furnishing junction and pull boxes. If required by Owner's representative, manufacturer shall submit a certification to a minimum experience of five years in manufacture of junction and pull boxes. Junction and pull boxes shall be U.L. listed.

1.05 DELIVERY, STORAGE AND HANDLING

A. Conduits shall not be shipped loose, but shall be bundled by sizes. Threads of metal conduits shall be protected by plastic caps. Fittings shall be stored in boxes. All equipment shall be stored on pallets to prevent contact with earth and shall be covered with plastic sheeting to protect them from dirt and weather.

B. Junction and pull boxes shall not be shipped loose, but shall be in boxes with labels indicating size and type. These boxes shall be stored away from contact with earth and protected from weather and abuse.

1.06 MAINTENANCE SERVICE (WARRANTY)

A. All equipment shall be warranted to be free from defects in material and workmanship for a period of one year from date of substantial completion established by Owner.

PART 2 PRODUCTS

2.01 EQUIPMENT SPECIFICATION

A. Schedule 40 Rigid Aluminum Conduit

1. Conduit shall be of 6063 aluminum alloy, T-1 temper (Former designation T-42). Rigid aluminum conduit shall be third-party listed for use in classified (hazardous) locations. Conduit and installation shall comply with all requirements in NEC Article 344. Do not utilize steel or iron conduit fittings with aluminum conduit. Mounting hardware shall be corrosion resistant: stainless steel or aluminum.

B. Rigid PVC Conduit:

1. Conduit shall be Schedule 40 or Schedule 80, as noted on the drawings, PVC, 90°C, UL rated or approved equivalent. Material shall comply to NEMA Specification TC-2 (Conduit), TC-3 (Fittings-UL-514), and UL-651 (Standard for rigid nonmetallic conduit). Conduit and fittings shall carry a UL label (on each 10 foot length of conduit and stamped or molded on every fitting). Conduit and fittings shall be identified for type and manufacturer and shall be traceable to location of plant and date manufactured. Markings shall be legible and permanent. Clean rework material, generated by manufacturer's own conduit production, may be used by same manufacturer, provided end products meet requirements of this specification. Conduit and fittings shall be homogeneous plastic material free from visible cracks, holes, or foreign inclusions. Conduit bore shall be smooth and free of blisters, nicks or other imperfections which could mar conductors or cables. Conduit, fittings and cement shall be compatible to assure system integrity and shall be as shown on project drawings, or equal. Conduit and installation shall comply with all requirements in NEC Article 352. Mounting hardware shall be corrosion resistant: nonmetallic support straps or PVC conduit clamps with stainless steel hardware, designed for the installation of PVC conduit, which allows the conduit to expand and contract freely over varying temperature changes.

C. Fittings and Conduit Bodies:

1. Unless otherwise specified, all fittings and conduit bodies shall be manufactured from the same type of material as the conduit system (aluminum, galvanized steel, PVC, etc.)

2. Field Modifications to Existing Rigid Metal Conduit Systems ONLY: Where modifications to existing rigid conduit installations make threading of field cuts impossible, use Type HK series couplings by Thomas & Betts/Steel City, or equivalent.

D. Expansion and Deflection Fittings

1. Where noted on project drawings, or required by the nature of construction location, furnish conduit Expansion, Deflection or Expansion/Deflection Fittings. Expansion and deflection fittings shall be compatible with other conduit materials and be type AX (expansion), DX (deflection) or AXDX (expansion/deflection) as manufactured by O-Z/Gedney, or equivalent.

E. Pull Cords

1. Each empty conduit shown or described on the drawings shall be furnished with a pull cord to facilitate future conductor installation. Cord shall consist of non-deteriorating, non-metallic, non-cotton construction such as polyester or nylon material. Minimum tensile strength of all pull strings shall be 200#. Leave minimum of 12 inches slack at each termination or end. Any references on project drawings to “pull wire” shall be interpreted as a pull cord as described herein.

2.02 SEALING

A. Thermal Seal:

1. Seal penetrations of thermally insulated equipment or rooms top prevent heat transfer.

B. Moisture Seal:

1. When electrical conduits are installed in sleeves, core-drilled holes or box outs, seal between conduit and penetration of perimeter walls, ceilings or floors to prevent entry of water.
2. Seal conduit penetrations of roof with flashings compatible with roof design and approved by Roofing System Manufacturer and Engineer.
3. Seal annular space between conductors and conduit wall of all conduit terminations where conduit enters a building from below grade in order to block moisture migration into electrical equipment. In addition seal conduits entering electrical equipment located either interior or exterior that once installed condensation is created in the electrical equipment due the electrical system being connected to areas with a different temperature. Conduit moisture barrier material shall not harden and be compatible with both wire insulation and conduit materials. Installed product shall be easily removed for maintenance or modifications, regardless of the length of time material has been installed. Conduit moisture seal material shall be:
   a. “Hydroblock” by WaterGuard Technology Products
      16023 East Freeway
      Channelview, Texas 77530-4365
      Phone: (281) 862-0300
      Fax: (281) 862-0314
   b. American Polywater Corporation
      Polywater Duct Sealant FST-250 Series
      P.O. Box 53
      Stillwater, MN 55082
      Phone: (651) 430-2270
      Fax: (651) 430-3634
   c. O-Z/Gedney
      Type DUX Water Sealing Compound

2.03 BOXES

A. Dimensions of all boxes shall meet or exceed NEC Article 370 requirements. Boxes larger than 12 inches in any dimension shall be hinged type.

B. Flush mounted exterior boxes in floors, walkways and walls shall be NEMA 4, cast aluminum, Crouse Hinds, Killark, or equal. For supplemental corrosion protection, boxes encased in poured concrete shall have an asphalt paint coating applied to surfaces in contact with concrete prior to installation. Note that an asphalt paint coating is not required on boxes installed in masonry brick or block walls.

C. Surface mounted interior junction and pull boxes used with Schedule 40 PVC conduit shall be nonmetallic and shall be as manufactured by Carlon, or equal.

D. Surface mounted interior junction and pull boxes used with GRS or EMT conduit shall be NEMA OS-1, stamped galvanized steel.

E. Flush mounted interior boxes in concrete floors and concrete walls shall be NEMA 4, cast aluminum, Crouse Hinds, Killark, or equal, and shall be supplied with asphalt paint applied to all surfaces in contact with concrete.

F. Boxes used to support light fixtures shall be of metallic construction and capable of supporting installed fixtures.

G. Exterior junction and pull boxes located in non-hazardous, non-classified areas shall be NEMA 4X stainless steel or aluminum. Provide waterproof conduit hubs, Meyers or equivalent, for all conduit terminations at enclosures. Gasketed lock-nuts will not meet this requirement.

H. Acceptable manufacturers:
   1. Appleton Electric Co.
   2. Carlon
   3. Crouse-Hinds Co.
   4. Hammond
   5. Hennessy Outdoor Enclosures.
   6. Hoffman Co.
   7. Hubbell-Killark Electric Mfg. Co.
   8. O.Z./Gedney Co.
   9. Square D.
   10. Thomas & Betts

PART 3 EXECUTION

3.01 INSPECTION

A. All conduits shall be inspected for proper fit and finish, for out-of-round and for proper thickness. All burrs and flashing shall be removed. Conduit and fittings shall be clean and free of obstructions.

3.02 INSTALLATION

A. Unless otherwise specified or detailed on the project drawings, all wire and cable shall be installed in conduit.

B. Unless otherwise shown on the project drawings, minimum conduit trade-size shall be 3/4". Larger sizes shall be installed where noted or where required by NEC.

C. In general, no aluminum conduit shall be cast in concrete or in direct contact with earth. Where such contact is found necessary or where specifically noted on project drawings, either coat all aluminum contact surfaces with a protective bituminous coating (such as Carboline Bitumastic 50 or 300M) or alternately substitute galvanized rigid steel conduit for the sections which are in contact with concrete or earth.

D. Interior Conduit Applications:

1. Above Grade or Floor:
   Rigid aluminum type unless otherwise noted on the project drawings.
2. Below Grade or Floor:
   Schedule 40 PVC or galvanized rigid steel at the Contractor's option. Where interior conduits exit from below floor or grade to above grade furnish conduit transition between types no more than 6" above finish floor.

E. Exterior Conduit Applications

1. Above Grade:
   Rigid aluminum type unless otherwise noted on the project drawings. Where conduits exit to above grade transition to conduit type shall be no more than 6" from penetration.
2. Below Grade:
   Schedule 40 PVC or High-Density Polyethylene (HDPE) Conduit

F. Moisture Seal of Below-Grade Conduits

1. Seal annular space between conductors and conduit wall of all conduit terminations where conduit enters from below grade in order to block moisture migration into electrical equipment. Install product only after conductors have been installed, terminated and commissioned for service. Install moisture seal products per all manufacturers instructions and requirements.

G. Conduit size and fill requirements shall comply with appropriate conduit fill tables in Annex C of NEC. It should be noted these are minimum requirements and larger conduit sizes or smaller fill requirements shall be used whenever specified or detailed on drawings.

H. Flexible conduit shall be provided as a connection between each motor junction box (or any other piece of equipment subject to movement or vibration) and rigid conduit system. Liquid-tight and explosion-proof flexible conduit shall not exceed 3' in length.

I. Ream conduits only after threads are cut. Cut joints square to butt solidly into couplings. Where necessary to join two pieces of conduit and it is impossible to use standard coupling, use three piece conduit coupling. Use of running thread is prohibited. This applies to all rigid conduit installations, underground or otherwise.

In order to comply with NEC Article 300.6(A), all rigid steel conduit shall have field-cut threads re-coated using an electrically conductive, corrosion-resistant compound, Thomas & Betts/Shamrock “Kopr-Shield” (a product of Jet Lube, Inc.), or equivalent.

J. Make all joints in underground conduit watertight with approved joint compound. Temporarily plug conduit openings to exclude water, concrete or any foreign materials during construction. Clean conduit runs before pulling in conductors.

K. Hickey hand-bends will not be acceptable for conduits one inch (1") and larger. Use pre-manufactured factory elbows or bends fabricated with hydraulic bending machine. Field bending of all PVC conduit shall be accomplished with use of equipment approved by conduit manufacturer. Open flame bending equipment will not be acceptable.

L. A run of conduit between outlet and outlet, between fitting and fitting or between outlet and fitting shall not contain more than the equivalent of four quarter turn bends (360°), including bends immediately at an outlet or fitting.

M. At all conduit terminations furnish locknuts on both sides of enclosure plus an insulated bushing unless conduit termination is into a factory-threaded conduit opening or watertight (Myers-type) hub.

N. All conduit terminations at NEMA 4 or 4X enclosures shall be made with watertight (Myers-type) hubs listed for the application.

O. Do not run conduit below or adjacent to water piping, except where permitted by Owner’s representative.

P. Run exposed conduits parallel with walls and at right angles to building lines, not diagonally.

Q. Support exposed PVC conduit runs on walls or ceiling every three feet (3') and support exposed rigid metal conduit runs on walls or ceiling every five feet (5') with stainless steel or PVC coated galvanized cast one hole straps, clamp backs and anchors. Provide lead shield insert anchors, with stainless steel round head machine screws, for concrete and brick construction. In wood construction, use stainless steel round head wood screws. Where steel members occur, drill and tap and use stainless steel round head machine screws.

R. In brick construction, drill hole for insert near center of brick, not near edge or in mortar joint.

S. Support two or more PVC exposed hanging parallel conduit runs every three feet (3') and support exposed rigid metal hanging parallel conduit runs every five feet (5') with trapeze hangers. Hanger assembly to consist of concrete inserts, threaded solid rod, washers, nuts and cross members nominally one and five-eighths inch (1-5/8") by one and five-eighths inch (1-5/8") non-metallic framing, as specified in Section 26 05 29 – Hangers and Supports for Electrical Systems. Anchor each conduit individually to cross members of every other hanger with cast one hole straps, clamps backs and proper sized stainless steel or non-metallic machine bolts and nuts.

T. Perforated metal strapping of any kind is prohibited.

U. Provide expansion and deflection fittings in all conduits which pass through or over building expansion joints. All expansion and deflection fittings shall be designed for, and compatible with, the conduit types on which they are installed.

V. Grounding Electrode Conductors shall be installed in non-metallic PVC conduit or bonded to both ends of metallic conduit to comply with NEC 250.64.

W. All conduit and fittings installed in Classified Areas shall be third part listed for the applicable Hazardous Location.

X. PVC coated galvanized rigid steel conduit shall be installed per manufacturer's requirements, using tools specifically designed for installation of PVC coated galvanized rigid steel conduit. Any tools, hardware or installation methods which cause damage the PVC coating shall not be utilized. Do not install any material found damaged from shipping or handling. Any PVC coated conduit damaged during installation shall be immediately repaired to the satisfaction of the Owner's authorized representative using patching materials and methods per manufacturer's instructions. If, in the opinion of the Owner's authorized representative, PVC coated galvanized rigid steel conduit is damaged beyond repair, the damaged portion(s) shall be removed and replaced at the contractor's expense.

3.03 BOXES INSTALLATION

A. Junction or pull boxes required by code or need which are not detailed on drawings shall be considered incidental to proposal price and will not be paid for separately.

B. Any damage to equipment enclosures, pull or junction boxes shall be immediately repaired or replaced to satisfaction of Owner's representative.

C. All pull or junction boxes surface mounted in any interior damp location shall be "standoff" mounted 1/2" from the wall in a manner to promote air circulation completely around the box.

D. The contractor shall coordinate the installation of flush mounted junction boxes with the general and mechanical work as required at each structure.

E. Flush mounted junction boxes to be installed in precast top slabs shall be furnished by the contractor for installation, and shall be furnished completely assembled, including conduit nipples and stub-outs with ends covered by protective caps.

F. Provide knockout closures to cap unused knockout holes where blanks have been removed (for non-hazardous location boxes).

G. All mounting hardware shall be corrosion resistant.

H. All metal junction boxes shall be bonded to ground with a ground wire connection.

END OF SECTION 26 05 33

DIVISION 26 – ELECTRICAL
Section 26 05 53 – Identification
for Electrical Systems

PART 1 GENERAL

1.01 RELATED DOCUMENTS

A. Drawings and general provisions of the Contract, including General and Supplementary Conditions and Division 01 Specification Sections, apply to this Section.

1.02 SUMMARY

A. This section includes field-installed nameplates, labeling and identification methods for electrical equipment, components and wiring.

B. Related Sections

1. Section 26 05 00 – Common Work Results for Electrical

C. Reference to Standards

1. ANSI/NFPA 70 - National Electrical Code

1.03 SUBMITTALS

A. Submit under provisions of Division 01.

B. Product Data: Provide catalog data for nameplates, labels and markers.

C. Manufacturer's Instructions: Indicate application conditions and limitations of use stipulated by Product testing agency specified under Regulatory Requirements. Include instructions for storage, handling, protection, examination, preparation and installation of Product.

D. During course of construction, Contractor shall submit Wiring Identification Tables, listing wire marker identification schedules of all proposed wiring and terminations.

1.04 QUALIFICATIONS (RESERVED)

1.05 QUALITY ASSURANCE (RESERVED)

1.06 DELIVERY, STORAGE AND HANDLING

1.07 COORDINATION (RESERVED)

1.08 MAINTENANCE SERVICE (WARRANTY) (RESERVED)

1.09 EXTRA MATERIALS (SPARE PARTS) (RESERVED)

PART 2 PRODUCTS

2.01 MANUFACTURERS (RESERVED)

2.02 EQUIPMENT SPECIFICATION

A. Nameplates and legend plates shall be engraved three-layer laminated plastic, black letters on white background. Legends (wording) shall be as detailed on drawings or as directed by Owner's representative.

B. Arc Flash labels shall be polyester type that are waterproof.

C. All wire markers installed on electrical equipment above grade shall be weatherproof and water resistant. Wire identification labeling, whether factory applied or written in the field, shall utilize an adhesive that does not soften or weaken over time. Sleeve or tubing type labels may be utilized as an alternate. Paper adhesive-backed wire markers will be rejected and replaced at the Contractor's expense. Wire marker labels shall be as manufactured by Brady, or equivalent.

D. All wire markers installed below grade in manholes, handholes or vaults shall be waterproof. Markers shall be non-corroding plastic clip-on sleeve type construction. Markers shall be permanently factory-printed such that label identification will not deteriorate due to time or contact with water. Wire markers used below grade shall be Brady Clip-Sleeve, or equivalent.

E. Provide and install Safety Stripe Tapes on finished floors around electrical gear noting clearances required per NEC Article 110.26. Tape shall be minimum 2" in width with alternating black/yellow striping. Tape shall be Scotch/3M #5702 or equivalent.

PART 3 EXECUTION

3.01 EXAMINATION (RESERVED)

3.02 PREPARATION

A. Degrease and clean surfaces to receive nameplates, legend plates and markers.

3.03 INSTALLATION

A. Secure nameplates and legend plates to equipment using screws or adhesive.

B. Nameplates or legend plates shall be provided for all disconnects, enclosed starters, control panels, transformers, level meters, flow meters and recorders.

C. Per NEC 110.16: Arc Flash warning labels shall be included for all electrical equipment, such as switchboards, switchgear, panelboards, industrial control panels, meter socket enclosures and motor control centers, that are likely to require examination, adjustment, servicing, or maintenance while energized. Labels shall be field or factory marked to warn qualified persons of potential electric arc flash hazards. Label shall be permanently affixed, able to withstand the environment involved and shall not be hand written.

D. Per NEC 408.4 (B) All switchboards, switchgear and panelboards supplied by a feeder shall be permanently marked to indicate which device or equipment where the power originates. Label shall be self-adhesive, polyester type waterproof and shall not be handwritten.

E. Wiring Device identification labels shall be furnished and installed on all wiring device cover plates per Specifications Sections 26 27 26-3.01O and 26 27 26-3.01P.

F. Contractor shall develop the Wiring Identification Tables to be used for ALL wiring terminations on this project, and shall submit Tables for review and comment by Owner's Representative prior to installation of any conductors or cables.

G. Provide wire markers for ALL wires and terminations. By "all", this is intended to include, but not be limited to, all terminations at distribution panelboards, motors, valves, heaters, fan coils, heat pumps, fans, dampers, all MCC terminations, instrumentation & controls, terminal blocks and strips, etc. Wire identification shall be unique to wire that is marked or to terminal that wire lands upon. Identification of a run of wire from termination to termination shall be same throughout run.

H. Provide wire markers in all manholes, handholes and vaults.

I. Include markers labeled "SP" on all spare conductors.

3.04 INTERFACE WITH OTHER PRODUCTS (RESERVED)

3.05 MANUFACTURER'S FIELD SERVICES (RESERVED)

3.06 AS-BUILT WIRING IDENTIFICATION TABLE

A. Upon completion of project, Contractor shall provide five copies of as-built Wiring Identification Table. This table shall list all circuits installed as part of this work and shall give identification of all wires and terminations as installed and marked.

Table shall include routing of all conductors installed in the project from end-to-end including each conduit, manhole, handhole and vault through which each conductor passes. Include and identify all spare conductors.

END OF SECTION 26 05 53

PART 1 GENERAL

1.01 RELATED DOCUMENTS

A. Drawings and general provisions of the Contract, including General and Supplementary Conditions and Division 01 Specification Sections, apply to this Section.

1.02 SUMMARY

A. Work in this section is supply and installation of receptacles and toggle switches.

B. Work shall also include supply and installation of device boxes for receptacles and toggle switches.

C. Work shall also include supply and installation of remote control pushbutton stations.

D. Work shall also include supply and installation of multi-outlet surface mounted raceway (where required).

E. Related Sections

1. Section 26 05 00 – Common Work Results for Electrical
2. Section 26 05 19 – Low-Voltage Conductors and Cables
3. Section 26 05 33 – Raceway and Boxes for Electrical Systems
4. Section 26 05 53 – Identification for Electrical Systems

F. REFERENCE TO STANDARDS

1. UL Standard 943 Class A
2. Federal Specification W-C-596F
3. NEMA 250 - Enclosures for Electrical Equipment (1000 Volts Maximum).
4. NEC Article 410-57
5. NEMA WD-1
6. NEMA WD-6
7. ANSI/NEMA OS-1 - Sheet Steel Outlet boxes, Device Boxes, Covers and Box Supports
8. U.L. 514A - Metallic Outlet Boxes
9. U.L. 498

1.03 SUBMITTAL REQUIREMENTS

A. Submit under provisions of Division 01.

1. Receptacles
2. Toggle switches
3. Weatherproof covers and device boxes

4. Remote control stations
5. Multi-outlet raceway (if used)

B. Where applicable, color of wiring devices to be identified during submittal review.

1.04 QUALIFICATIONS

A. Wiring devices shall be manufactured and supplied by companies regularly engaged in business of furnishing wiring devices. If required by Owner's representative, manufacturers shall submit certification to a minimum experience of five years in manufacture of respective wiring devices.

1.05 DELIVERY, STORAGE AND HANDLING

A. Supplied items shall not be shipped loose but shall be in boxes, labeled with material and equipment enclosed. Boxes shall be stored away from contact with earth and shall be protected from weather.

1.06 MAINTENANCE SERVICE (WARRANTY)

A. All equipment shall be warranted to be free from defects in material and workmanship for a period of one year from date of substantial completion established by the Owner.

PART 2 PRODUCTS

2.01 EQUIPMENT SPECIFICATION

A. Receptacles:

1. Receptacles shall be installed under this item where shown on drawings.
2. General Purpose Receptacles (Non-GFCI)

General purpose receptacles for all wall type convenience outlets in non-hazardous areas shall be of 20-amp, 125-volt, 3-wire grounding type, NEMA 5-20R, back and side wire compatible, heavy duty industrial specification grade. Verify color during shop drawing review.

a. Leviton 5362-W
b. Pass & Seymour 5362-AW
c. Hubbell HBL5362-W
d. Equivalent

3. Corrosion Resistant Receptacles (Non-GFCI)

Where indicated on the drawings, corrosion resistant receptacles in non-hazardous areas shall be of 20-amp, 125-volt, 3-wire grounding type, NEMA 5-20R, back and side wire compatible, heavy duty industrial specification grade. Color to be verified during shop drawing review.

a. Leviton 53CM62
b. Pass & Seymour CR6300
c. Hubbell HBL53CM62
d. Equivalent

4. Self-Test Ground Fault Circuit Interrupting (GFCI) Duplex Receptacles

Duplex receptacles with ground fault circuit interrupters (GFCI) shall be provided and installed where noted on drawings. Receptacle shall be tamper resistant. Include indicator light that is lighted when device is tripped. Self-test feature to conduct an automatic test, ensuring ground protection. If ground fault protection is comprised, power to the receptacle must be discontinued. Verify color during shop drawing review. GFCI Receptacles shall be of the following types:

a. Interior GFCI Applications (Non-Hazardous)
i. Leviton “SmartLock Pro) GFNT2-X
ii. Pass & Seymour 2097
iii. Hubbell GFTRST20
iv. Equivalent, meeting requirements noted.

b. Weather-Resistant, Self-Test GFCI Receptacles.

Where indicated on the drawings, UL Weather-Resistant GFCI receptacles in non-hazardous areas shall be 20-amp, 125-volts, 3-wire grounding type, NEMA 5-20R, back and side wire compatible, specification grade. Include indicator light that is lighted when device is tripped. Self-test feature to conduct an automatic test every three seconds, ensuring ground protection. If ground fault protection is comprised, power to the receptacle must be discontinued.

i. Leviton GFWT2
ii. Pass & Seymour 2097WR
iii. Hubbell GFWRST
iv. Equivalent

B. Toggle Switches

1. Toggle switches shall be installed under this item.
2. General Purpose Toggle Switches

Units for use in non-hazardous, toggle-type applications shall be 20A, 120/277 VAC rated, back and side wired type, industrial specification grade. Switches shall be duty rated for 1 HP at 120 VAC. Verify color during shop drawing review.

a. Single Pole

Leviton 1221-2
Pass & Seymour CSB20AC1
Hubbell HBL1221
Equivalent

C. Unless noted otherwise on the drawings, wall plates shall be of stainless steel construction for resistance to impact, abrasion and mechanical stress fracture. Wall plate color shall match receptacle or switch at each location.

D. Weatherproof Receptacle Covers

1. All receptacle covers noted as "weatherproof" with the letters “WP” or installed outdoors shall comply with NEC Article 406.9B1. Units shall remain raintight whether or not a plug and cord is inserted. Covers shall be extra-deep, padlock able, cast aluminum construction, listed and identified as “extra duty” as manufactured by Intermatic WP1010HMXD, Hubbell, WP26EH, Pass & Seymour CA26WVor equivalent, horizontal, for use with GFCI receptacles.

E. Device Boxes

1. Where PVC conduit is used, associated device boxes shall be of FS design, non-metallic PVC, as manufactured by Carlon, or equivalent.
2. Where galvanized rigid metal conduit is used, associated device boxes shall be FS or FD design, metallic, as manufactured by Crouse-Hinds, or equivalent.

F. CONTROL STATIONS

1.

a. Pushbutton type control stations used to control motors, solenoids and selected lights and heaters, etc., shall be furnished and installed under this item and located where indicated on drawings.

2. General Purpose Control Statins (Non-Hazardous Locations)

Interior and exterior general-purpose control stations shall be NEMA 4X rated, with NEMA 4X enclosures. Selector switches, pushbuttons and transformer type, push-to-test indicating lights shall be Square D Type SK, or equivalent.

PART 3 EXECUTION

3.01 INSTALLATION

A. Unless otherwise specified on the drawings, use the following as a guide for mounting of device boxes and control operator (pushbutton) stations:

	Device	Height above finished floor to bottom of box
1.	Toggle wall switches	48 inches
2.	Receptacles in all other or non-finished areas.	48 inches
3.	Control Operator (P.B.) Stations	48 inches

B. Unless otherwise noted on the drawings, boxes for wiring devices shall be flush mount construction such that device cover plates are flush with wall after installation.

C. Legend plates shall be securely attached using weatherproof adhesives in accordance with Section 26 05 53.

D. All receptacles and toggles switches shall be grounded with a ground conductor connected to their respective grounding terminal or screw.

E. Grounded conductors (neutrals) shall be continuous between outlets, boxes, devices, and so forth per NEC Article 300.13. Wiring device neutral connections shall not be utilized as splice points. Neutral path shall not be broken with wiring devices removed from boxes.

F. Test all receptacles, toggle switches and control stations for proper operation, including GFCI operation where applicable.

G. Modular devices are permitted for use. Modular connectors shall contain crimped and welded brass connections. Modular receptacles shall be listed to UL498, UL20, WC-596G, WC-896, Leviton Lev-Lok, Pass & Seymour PlugTail, or equal.

H. Ground device enclosure or box with a ground conductor connected to the respective grounding lug or screw.

I. Unless specifically shown otherwise on the drawings, all device boxes are to be flush mounted. This includes masonry construction.

J. Where boxes are to be installed in finished masonry walls, adjust position of outlets to suit masonry course lines.

K. Do not install boxes back-to-back in the same wall. Provide minimum 4 inches separation.

L. Provide insulation behind boxes mounted in exterior walls.

M. For boxes, outlets or multi-outlet raceway installed above counters or backsplashes, coordinate location and mounting height to agree with other trades and equipment.

N. Unless otherwise specified, install wall switches with “OFF” position down.

O. Unless otherwise specified, install duplex outlets with ground blade on the bottom if mounted vertically or to the right if mounted horizontally. Install GFCI receptacles in such that “Test” and “Reset” wording are oriented correctly.

P. Each duplex outlet cover shall be furnished with a 3/8”-1/2” adhesive label strip identifying its respective source of supply (e.g. LP1-15 for Lighting Panelboard LP-1 circuit #15). All labels shall be affixed to the exterior (outside) of each respective cover plate. All duplex outlet labels shall be installed in the same general location on each cover plate throughout the project.

Q. Each toggle wall switch shall be furnished with a 3/8”-1/2” adhesive label strip identifying its respective source of supply (e.g. LP1-16 for Lighting Panelboard LP-1 circuit #16). All toggle switch labels shall be affixed to the rear (inside) of the respective cover plate.

R. Exterior receptacles shall be mounted horizontal.

END OF SECTION 26 27 26

PART 1 GENERAL

1.01 WORK INCLUDES

A. The work on this section is the supply and installation of packaged power supplies, including transformer, panelboard section and circuit breakers in a weatherproof enclosure.

1.02 RELATED SECTIONS

A. Section 26 05 00 – Common Work Results for Electrical

B. Section 26 05 26 - Grounding and Bonding

C. Section 26 05 29 - Supporting Devices

D. Section 26 05 53 - Electrical Identification

E. Section 26 01 26 - Testing Electrical Systems

1.03 REFERENCE TO STANDARDS

A. NEMA 250 - Enclosures for Electrical Equipment (1000 Volts Maximum).

B. U.L. Listed.

C. U.L. Standard 489.

D. U.L. Standard 67 Panelboards.

E. NEMA PB 1.1 - Instructions for Safe Installation, Operation and Maintenance of Panelboards Rated 600 Volts or Less.

F. NFPA 70 - National Electrical Code.

G. NECA (National Electrical Contractors Association) "Standard of Installation".

H. NEMA AB 1 - Molded Case Circuit Breakers.

I. NEMA ICS 2 - Industrial Control Devices, Controllers, and Assemblies.

J. NEMA KS 1 - Enclosed Switches.

K. NEMA PB 1 - Panelboards.

L. Federal Specification W-P-115b, Type I, Class I.

M. Federal Specification W-G-375B (Circuit Breakers).

N. U.L. 50 Cabinets and Boxes.

1.04 DELIVERY, STORAGE AND HANDLING

A. Mini power centers shall be stored indoors from time of delivery to jobsite, protected from weather and construction.

1.05 SUBMITTALS

A. Submit under provisions of Section 01 33 00.

B. Submittals for Mini-Power Distribution Center shall include transformer rating, voltage, bus ampacity, circuit breaker switch arrangement and sizes, unit weight, outline and support point dimensions of enclosures and accessories, and manufacturer name and catalog number. Submittals shall also include manufacturer's installation instructions; indicating application conditions and limitations of use stipulated by product testing agency. Include instructions for storage, handling, protection, examination, preparation, installation and starting the product.

1.06 QUALIFICATIONS

A. The mini power centers shall be manufactured and supplied by a company regularly engaged in the business of furnishing dry type transformers. If required by the Construction Manager, the manufacturer shall submit a certification to a minimum experience of five years in the manufacture of mini power centers.

1.07 WARRANTY

A. Mini power centers shall be warranted to be free from defects in material and workmanship for one year from date of substantial completion.

PART 2 PRODUCTS

2.01 MINI POWER CENTERS

A. The mini power center shall be built according to the latest revision of ANSI C89.2 (ST-20). It shall feature a self-contained indoor outdoor non-ventilated enclosure that incorporates a primary breaker, dry type transformer, secondary main breaker and a secondary distribution section. Units shall be designed for continuous operation at rated KVA, for 24 hours a day, 365 days a year operation with normal life expectancy as defined in ANSI C57.96.

B. Transformer sound levels shall not exceed the following ANSI and NEMA levels for self-cooled ratings:

0 to 9 KVA - no more than 40db
10 to 30 KVA - no more than 50db

C. Insulating Systems

1. Transformers shall be insulated with a 180° C insulation system minimum.

2. Required performance shall be obtained without exceeding the above-indicated temperature rise in a 40° C maximum ambient, with a 30° C average over 24 hours.
3. All insulation materials shall be flame-retardant and shall not support combustion as defined in ASTM Standard Test Method D635.

D. Core and Coil Assemblies
1. Transformer core shall be constructed with high-grade, nonaging, grain-oriented silicon steel with high magnetic permeability, and low hysteresis and eddy current losses. Maximum magnetic flux densities shall be substantially below the saturation point. The transformer core volume shall allow efficient transformer operation at 10% above the nominal tap voltage. The core laminations shall be tightly clamped and compressed. Coils shall be wound of electrical grade aluminum with continuous wound construction.
2. The core and coil assembly shall be completely encapsulated in a proportioned mixture of resin and aggregate to provide a moisture-proof, shock-resistant seal. The core and coil encapsulation system shall minimize the sound level.
3. The core of the transformer shall be grounded to the enclosure.
4. Provide minimum two (2) FCBN taps.

E. Bus
1. Secondary bus shall be aluminum.

F. Wiring / Terminations
1. All interconnecting wiring between the primary circuit breaker and transformer, secondary main circuit breaker and transformer and distribution section shall be factory installed and terminated.
2. All transformers shall be equipped with a wiring compartment suitable for conduit entry and large enough to allow convenient wiring.

G. Main Devices
1. Each mini-power center shall include a Main primary circuit breaker with an interrupting rating of 14 KA at 480 volts; and a secondary panelboard with a main circuit breaker rated 10 KA at 120/240; or 208Y/120 as applicable.

H. Feeder Devices
1. The secondary distribution section shall accommodate standard panelboard circuit breakers with 10KA interrupting capacity.

I. Enclosure
1. The enclosure shall be made of heavy-gauge steel and the maximum temperature of the enclosure exterior shall not exceed 90° C.
2. The enclosure shall be totally enclosed, nonventilated, with lifting eyes.
3. Unless specified otherwise on the drawings, enclosure rating shall be NEMA 3R. Enclosure door shall accept padlock.

J. The mini power center shall be listed by Underwriters' Laboratories. Mini-Power Distribution center shall be Square D, Class 7400 or equivalent.

PART 3 EXECUTION

3.01 INSPECTION

A. Mini power centers shall be inspected for physical damage. Matching touch up paint shall be used as needed.

3.02 INSTALLATION

A. Mini-Power Distribution Center

1. Install Mini-Power Distribution Center in accordance with manufacturer's instructions and as detailed on the drawings. Provide typed circuit directory for the secondary distribution section. Revise directory to reflect circuiting changes as required.
2. The Contractor shall ground the secondary circuit of the Mini-Power Distribution Center by means of a 3/4" diameter by 10 foot long copper clad ground rod. Furnish and install ground rod as detailed on the drawings. Ground rod shall be connected to secondary neutral with a #6 copper bare stranded conductor minimum or as detailed on the drawings installed in a 1" Schedule 40 PVC Conduit. Conductor shall be Exothermic Welded to top of ground rod minimum of 1'-0" below finish grade.
3. Provide Legend Plates for all mini-power distribution centers to identify the area and/or equipment controlled by the panelboard. Legend plates shall comply with Section 26 05 53 - Electrical Identification.
4. Install grounding bushings with ground wire connections between the bushing and the ground bus at all metal conduit terminations that enter or leave the Mini-Power Distribution Center.
5. Verify all future/spare circuit breakers shown on drawings are provided as indicated
6. Install surge arrestors per requirements in Section 26 43 13 on panelboard of mini-power center in conformance with manufacturer’s requirements.

3.03 TESTING

A. Check for damage and tight connections prior to energizing mini power centers.

B. Measure primary and secondary voltages and make appropriate tap adjustments.

C. Phase loads shall be within 20% of each other. Rearrange circuits as required to maintain proper phase balance to meet this requirement.

END OF SECTION 26 27 30

DIVISION 26 – ELECTRICAL
Section 26 28 16 – Enclosed Switches and Circuit Breakers

PART 1 GENERAL

1.01 WORK INCLUDES

A. This section includes enclosed safety switches for use as service disconnects, feeder and branch circuit switching and disconnect switches for motors and equipment.

B. This section shall also include double-throw safety switches used as manual transfer switches.

C. This section includes furnishing and installation of enclosed circuit breakers for use as service disconnects feeder or branch circuit switching.

1.02 RELATED SECTIONS

A. Section 26 05 00 – Common Work Results for Electrical
B. Section 26 05 19 – Low-Voltage Conductors and Cables
C. Section 26 05 26 – Grounding and Bonding for Electrical Systems
D. Section 26 05 29 – Hangers and Supports for Electrical Systems
E. Section 26 05 33 – Raceway and Boxes for Electrical Systems
F. Section 26 05 53 – Identification for Electrical Systems

1.03 REFERENCE TO STANDARDS

A. ANSI/NFPA 70 - National Electrical Code.

B. NEMA KS 1 - Enclosed Switches.

C. NECA - National Electrical Contractors Association.

D. UL 489 - Molded Case Circuit Breakers

E. UL 869A - Reference Standard for Service Equipment

F. NEMA AB1 - Molded Case Circuit Breakers

G. NEMA 250 - Enclosures for Electrical Equipment (1000 Volts Maximum).

H. NEMA 250 - Enclosures for Electrical Equipment (1000 Volts Maximum).

1.04 DELIVERY, STORAGE AND HANDLING

A. Single-Throw and Double-Throw Safety Switches shall be stored in original containers as delivered to jobsite. Safety switches shall be stored on pallets or other supports to prevent contact with earth. Safety switches shall be covered to protect them from weather.

B. Enclosed circuit breakers shall be stored in a clean dry place, away from construction.

1.05 SUBMITTALS

A. Submit under provisions of Division 01.

B. Product Data: Provide catalog data for switch ratings and enclosure dimensions.

C. Manufacturer's Instructions: Indicate application conditions and limitations of use stipulated by Product testing agency specified under Regulatory Requirements. Include instructions for storage, handling, protection, examination, preparation and installation of Product.

D. Product Data: Provide information on the following:
1. Voltage Rating
2. Continuous Current
3. Interrupting Ratings
4. Cable Terminal Sizes

E. Indicate application conditions and limitations of use stipulated by Product testing agency specified under Regulatory Requirements. Include instructions for storage, handling, protection, examination, preparation and installation of Product.

1.06 QUALIFICATIONS

A. Enclosed circuit breakers shall be furnished by manufacturer regularly engaged in the construction of enclosed circuit breakers, with a minimum of five years' experience in furnishing equipment of this type.

1.07 QUALITY ASSURANCE

A. Perform work in accordance with NECA Standard of Installation.

1.08 REGULATORY REQUIREMENTS

A. Conform to requirements of ANSI/NFPA 70.

B. Furnish products listed and classified by Underwriters Laboratories, Inc., as suitable for purpose specified and shown.

1.09 COORDINATION (RESERVED)

1.10 MAINTENANCE SERVICE (WARRANTY)

A. All equipment shall be warranted to be free from defects in material and workmanship for a period of one year from date of substantial completion established by the Owner.

1.11 EXTRA MATERIALS (SPARE PARTS) (RESERVED)

PART 2 PRODUCTS

2.01 MANUFACTURERS

A. Square D
B. Cutler-Hammer
C. Siemens
D. General Electric

2.02 EQUIPMENT SPECIFICATION – ENCLOSED SWITCHES

A. Safety switches (disconnects) shall be rated for use at 480 Volts, 3 phase and shall be Heavy Duty, NEMA KS 1 load interrupter enclosed knife switch with externally operated handle interlocked to prevent opening front cover with switch in ON position. Disconnect handle shall be lockable in OFF position.

B. Safety switch enclosures shall be NEMA 4X, unless otherwise indicated on drawings.

C. Where noted on project drawings, disconnects shall be fusible-type and shall include high-interrupting capacity, U.L. Class “R” time-delay (slow-blow) fuses, Buss, or equivalent. Fuse ampacities shall be as noted on the project drawings. Three spare fuses of each ampacity used on the project drawings shall be provided with each fusible disconnect.

D. Where noted, disconnects shall be U.L. Listed as suitable for use as Service Entrance Disconnect Equipment. Provide Ground Kit and Neutral Kit where required.

2.03 EQUIPMENT SPECIFICATION – ENCLOSED CIRCUIT BREAKERS

A. Protective devices shall be molded case design and shall be operated by a toggle-type handle and shall have a quick-make, quick-break over-center switching mechanism that is mechanically trip-free. Automatic tripping of the breaker shall be clearly indicated by the handle position. Contacts shall be non-welding silver alloy and arc extinction shall be accomplished by means of arc chutes. A push-to-trip button on the front of the circuit breaker shall provide a local manual means to exercise the trip mechanism.

B. Unless otherwise specified, enclosed circuit breakers shall have a minimum symmetrical interrupting capacity of 65,000 Amps at 480 Volts.

C. Where applicable, circuit breakers and associated enclosure shall be UL listed and labeled as suitable for use as service entrance equipment.

D. Unless otherwise specified, enclosed circuit breakers shall be U.L. Listed for 80% capacity. Circuit Breaker shall be furnished with line and load lugs suitable for use with number and size of cables as shown on project drawings. All line and load cables shall be applied at NEC 75°C ratings.

Where enclosed circuit breakers are specifically noted as 100% capacity rated, line and load cables shall be 90°C rated conductors applied at 75°C ampacity rating.

E. Circuit breaker enclosure shall be the same manufacturer as circuit breaker, furnished with circuit breaker and NEMA rated as shown on project drawings. With the exception of NEMA 1 enclosures, all conduit penetrations on circuit breaker enclosure shall be through the use of watertight conduit hubs, Meyers or equivalent.

F. Enclosed circuit breakers for use as service entrance equipment shall be furnished with both isolated neutral and ground lug.

PART 3 EXECUTION

3.01 EXAMINATION

A. Inspect safety switches for proper operation. Disconnect switch movement shall not bind at any point in its travel. Inspect enclosures for corrosion and water tightness.

3.02 PREPARATION (RESERVED)

3.03 INSTALLATION

A. Install safety switches (disconnects) where detailed on drawings. All switches shall be mounted to strut-type framing.

B. All safety switches shall be bonded to equipment grounding system.

C. Provide nameplate for each safety switch as detailed on drawings or as directed by Owner's representative.

D. Inspect all disconnects for proper operation, tight and secure connections, and correctness. Adjust as necessary to assure proper operation.

E. The Contractor shall install circuit breakers per the manufacturer's recommendations and the project drawings.

3.04 INTERFACE WITH OTHER PRODUCTS (RESERVED)

3.05 MANUFACTURER'S FIELD SERVICES (RESERVED)

3.06 TESTING

A. Standard factory tests shall be performed on the equipment under this section. All tests shall be in accordance with the latest version of NEMA and UL standards.

B. Test all disconnects for proper operation and continuity on all poles when in the closed (ON) position.

3.07 FIELD SETTINGS

A. The Contractor shall perform field adjustments of the circuit breakers as required to place the equipment in final operating condition. The settings shall be in accordance with data to be provided by the engineer during construction.

END OF SECTION 26 28 10

CITY OF GRAIN VALLEY

WATER TOWER UPGRADE

DIVISION 31 – EARTHWORK

TABLE OF CONTENTS

SECTION NUMBER	SECTION TITLE	PAGE NUMBER
31 11 00	Site Preparation	31 11 00 1-2
31 23 00	Excavation and Fill	31 23 00 1-10
31 23 19	Dewatering	31 23 19 1-4
31 23 33	Trenching and Backfilling	31 23 33 1-11
31 25 00	Erosion and Sedimentation Control	31 25 00 1-3
31 32 00	Soil Stabilization	31 32 00 1-4
31 41 00	Shoring	31 41 00 1-7

PART 1 GENERAL

1.01 RELATED DOCUMENTS

A. Drawings and general provisions of the Contract, including General and Supplementary Conditions and Division 01 Specification Sections, apply to this Section.

1.02 SUMMARY

A. This section includes the work necessary to clear and remove topsoil, plants and trees for preparing the soil for construction.

B. Related Sections
   1. Section 31 23 00 – Excavation and Fill
   2. Section 31 23 33 – Trenching and Backfilling
   3. Section 31 25 00 – Erosion and Sedimentation Control

1.03 SUBMITTALS

A. No submittals are required in this section.

PART 2 PRODUCTS – NOT USED

PART 3 EXECUTION

3.01 STRIPPING TOPSOIL

A. Stripping of any vegetation and topsoil is required. Topsoil shall be removed from all building and pavement areas a minimum of 5 feet, in all directions, beyond the limits of construction. Any area used as a source of fill should also be stripped of topsoil. Stripping depth shall be a minimum of 6”. Additional stripping depth may be required to adequately remove vegetation and heavily organic soils. The Contractor shall stockpile topsoil to be used when the site construction is complete. Contractor shall indicate to the Engineer the areas of topsoil stockpile(s) for approval prior to commencing work.

GRUBBING

A. All stumps of trees and brush removed shall be grubbed to at least 2 feet below existing grade. This includes stumps that remain as a result of previous work in this area.

B. Areas that will not be further disturbed on this project shall be restored to grade with stripped material from the site.

3.02 DISPOSAL

A. Vegetative materials removed from the site shall be transported within appropriate vehicles and disposed of off-site at areas that are approved by governing authorities and appropriate property owners.

B. Disposal of non-vegetative materials will be the Contractor's responsibility and shall be disposed of off-site in an environmentally friendly, legal and safe manner at no additional cost to the Owner.

END OF SECTION 31 11 00

DIVISION 31 – EARTHWORK
Section 31 23 00 – Excavation and Fill

PART 1 GENERAL

1.01 RELATED DOCUMENTS

A. Drawings and general provisions of the Contract, including General and Supplementary Conditions and Division 01 Specification Sections, apply to this Section.

1.02 SUMMARY

A. Excavation, stockpiling, placement and compaction, of earth materials as required under the project.

B. Backfilling and compacting for structures, pavements, and general site

C. Site rough and finish grading

D. Preparation of subgrade for slabs, pavements, and installation of footings

E. Standard Proctor density testing and compaction testing

F. Excavation and backfill for utilities and piping

G. Related Sections

1. Section 01 50 00 – Temporary Construction Facilities and Controls
2. Section 02 30 00 – Subsurface Investigation
3. Section 31 11 00 – Site Preparation
4. Section 31 23 19 – Dewatering
5. Section 31 25 00 – Erosion and Sedimentation Control
6. Section 31 32 00 – Soil Stabilization
7. Section 31 41 00 – Shoring
8. Section 33 05 00 – Buried Piping
9. Division 03 – Concrete
10. Division 26 - Electrical
11. Division 33 – Utilities

H. Reference to Standards

1. American Safety for Testing and Materials (ASTM).
2. Occupational Safety and Health Administration (OSHA): Current OSHA Occupational Safety and Health Standards - Excavations, 29 CFR Part 1926, including any successor regulations.
3. ASTM D698 - Test Method for Laboratory Compaction Characteristics of Soil Using Standard Effort (12,400 ft-lbf/ft^3).
4. ASTM D 4253 Standard Test Methods for Maximum Index Density and Unit Weight of Soils Using a Vibratory Table.

5. ASTM D 4254 Standard Test Method for Minimum Index Density and Unit Weight of Soils and Calculation of Relative Density.

I. Regulatory Requirements

1. Perform excavation and backfilling work in compliance with applicable requirements of governing authorities having jurisdiction.
2. Prior to the commencement of construction, the Contractor shall be aware of, and become familiar with applicable local, state and federal safety regulations, including the current OSHA Occupational Safety and Health Standards - Excavations, 29 CFR Part 1926, including any successor regulations.
3. Additionally, the Contractor shall be aware that slope height, slope inclination and excavation depths (including utility trench excavations) should in no case exceed those specified in local, state or federal safety regulations.

1.03 DEFINITIONS

A. Suitable Soil: Suitable soil is a soil having less than 6% organic matter by weight as determined by Loss on Ignition Test (determine weight loss caused by heating sample to 500 degrees C for six hours after drying in accordance with ASTM D-2216, “Laboratory Determination of Moisture Content of Soil”).

B. Unsuitable Soil: Unsuitable soil is a soil that contains 6% or more organic matter as determined by the Loss on Ignition test, soils with a Proctor maximum dry density less than 100 pcf, soils with a Plasticity Index of less than 4, shale, weathered shale, coal, rubbish, vegetable matter of any kind, roots and rocks larger than two inches in dimension which might interfere with the proper bonding to adjacent surfaces, or as otherwise determined unsuitable by the Contractor’s qualified independent testing laboratory.

C. Stable Soil: soil is considered sufficiently stable when it

1. Prevents rutting and shoving during standard construction practices
2. Limits the amount of rebound deflections under wheel loadings (pumping)
3. Provides good support of placement and compaction of subsequent layers of fill.

D. Cohesionless Soils: Soils which do not demonstrate a well-defined moisture-density relationship in compaction testing. Also referred to as granular soils.

E. Cohesive Soils: Soils which demonstrate a well-defined moisture-density relationship in compaction testing.

F. Pavement or Paved Surfaces: Existing or proposed surface treatments of bituminous asphalt, Portland cement concrete, or compacted aggregate.

1.04 COORDINATION

A. Do not interrupt existing utilities serving facilities occupied and used by Owner or others except when permitted in writing by the Engineer and then only after acceptable temporary utility services have been provided. Provide minimum of 48 hour notice prior to enacting an approved temporary interruption.

1.05 SUBMITTALS

A. Submit under the provisions of Division 1, Section 01 33 00 – Submittal Procedures. All materials shall be submitted for approval. Samples shall be submitted when requested by the Engineer.

B. Manufacturer's Certificate and Product Data: Certify that products meet or exceed specified requirements.

C. The Contractor shall submit a list of equipment intended to be utilized on this project to the Engineer.

1.06 FIELD TESTING

A. Provide in accordance with Division 1, Section 01 45 00 – Quality Requirements.

B. Compaction Tests

1. Standard Proctor Density Testing and Compaction Testing of fill materials and inspection of subgrades and fill layers will be performed by the Contractor's qualified independent testing laboratory. Contractor shall inform Engineer 24 hours in advance of soil compaction operations.
2. If in the opinion of the the Contractor's qualified independent testing firm, based on proofrolls, field density tests, or inspections, subgrades and fills which have been placed below the specified density or subgrades and fills which exhibit the characteristics of unstable soils, the Contractor shall provide additional compaction, soil stabilization per Section 31 32 00, and/or removal and replacement of the material at no additional cost to the Owner.
3. When, during progress of work, tests indicate that compacted materials will not meet specifications, remove defective work, replace and retest at no additional cost to the Owner.
4. Ensure that all compacted fills are tested before proceeding with placement of surface materials.

PART 2 PRODUCTS

2.01 STRUCTURAL FILL MATERIALS

A. General

1. Unless otherwise specified on the plans, structural fill for all structures shall meet the requirements of MODOT Standard Specifications Section 1010 or shall be composed of suitable lean (silty or sandy) clay with liquid limit no greater than 50% and plasticity index no greater than 25%. The on-site lean clay materials obtained from excavations may be used as structural fill provided that it is not deemed unsuitable per Article 1.03 of this Section.
2. Contractor shall engage a qualified independent testing laboratory to test materials from on-site and off-site sources to test materials for conformance to this specification.

2.02 FILL AND BACKFILL MATERIALS

A. Base Materials: Under floors, structural slabs, pads, concrete landings, exterior walks, steps, or grade slabs, base material shall be MODOT crushed limestone Class C Quality material with a Plasticity Index (PI) range of 0 to 4, minimum of 6 inches in depth unless otherwise shown. All materials to be compacted to 97% Standard Proctor Density in accordance with ASTM D-698.

B. Granular Materials: When called for on the plans, granular backfill under steps, concrete landings, walks, slabs and against substructure walls is defined as granular soils MODOT FA-1 or FA-2, Class C quality, or CA-6 Class C quality with a Plasticity Index (PI) range of 0 to 4.

C. Cohesive Materials: Provide acceptable soil materials in accordance with geotechnical report provided that it is not deemed unsuitable per Article 1.03 of this Section.

PART 3 EXECUTION

3.01 EXAMINATION

A. Site Information

1. Data indicated on subsurface conditions are not intended as representations or warranties of accuracy or continuity between soil borings. It is expressly understood that Owner, and Engineer will not be responsible for interpretations or conclusions drawn therefrom by Contractor. Data are made available for convenience of Contractor.
2. Contractor shall be responsible for determining the actual ground water elevation and soil conditions at the specific site prior to commencing with the excavation. It may be expedient to drill auger holes, excavate test pits or make additional soil borings at or adjacent to the construction area immediately prior to construction to determine the prevailing soil conditions and water table elevation. It is the Contractor's responsibility to make auger holes, excavate test pits or make additional soil borings as he deems appropriate to determine the ground water and soil conditions that will be encountered. Additional test borings and other exploratory operations made by the Contractor shall be at no cost to the Owner.

3.02 PREPARATION

A. Establish extent of excavated areas.

B. Set specified lines, levels, contours and grades.

C. Maintain bench marks, monuments and other reference points.

D. Before starting excavation, establish location and extent of underground utilities occurring in work area. Contact Missouri One Call or DIG RITE (1-800-344-7483) and all other utility companies on the project site which are not members of this system. If the Contractor ruptures or causes damage to such objects while digging or during any construction, it is the responsibility of the party performing the

construction work to pay the utility company for repairs and such costs shall not be borne by the Owner or the Engineer.

E. Maintain, reroute or extend existing utility lines to remain which pass through work area.

F. Backfilling and compaction shall not occur until the following conditions are satisfied:

1. Acceptance by the Engineer of construction below finish grade including, where applicable, dampproofing, geocomposite wall drain, perimeter insulation and filter fabric.
2. Inspection, testing, approval and recording locations of underground utilities.
3. Removal of concrete formwork.
4. Removal of trash and debris, vegetation, snow or ice, water, unsatisfactory soil materials, obstructions and deleterious materials.
5. Removal of shoring and bracing and backfilling of voids with satisfactory material.
6. Ensure that ground surface within excavated area to be backfilled is not frozen.
7. When existing ground surface has a density less than that specified under Article 3.04-C of this Section for particular area classification, break up ground surface, pulverize, moisture-condition to optimum moisture content and compact to required depth and percentage of maximum density. Ground conditioning shall be performed at no additional cost to the Owner.

3.03 EXCAVATION

A. General

1. Excavation consists of removal of material encountered when establishing required grade and subgrade elevations and cross sections.
2. The Contractor is solely responsible for designing and constructing stable excavations and should shore, slope, or bench the sides of the excavations as required to maintain stability of both the excavation sides and bottom. All excavations shall comply with applicable local, state and federal safety regulations including the current OSHA Occupational Safety and Health Standards - Excavations, 29 CFR Part 1926, including any successor regulations.
3. All sheeting, shoring and bracing of trenches, pits and excavations shall be the sole responsibility of the Contractor.
4. Construction site safety is the sole responsibility of the Contractor, including but not limited to, the means, methods, and sequencing of construction operations.
5. Earth excavation consists of removal and disposal of pavements and other obstructions visible on ground surface, underground structures and utilities indicated to be demolished and removed, material of any classification indicated in data on sub-surface conditions, and other materials encountered that are not classified as unauthorized excavation.

B. Dewatering

1. Dewatering of excavations, including pipe and utility trenches, shall be performed in accordance with Section 31 23 19 – Dewatering.

C. Unauthorized Excavation

1. Unauthorized excavation consists of removal of materials beyond indicated subgrade elevations or dimensions without specific direction of the Engineer. Unauthorized excavation, as well as remedial work directed by the Engineer, shall be at Contractor's expense. Under footings, foundation bases, or retaining walls, fill unauthorized excavation by extending indicated bottom elevation of footing or base to excavation bottom, without altering required top elevation. Lean concrete fill may be used to bring elevations to proper position, only when determined necessary by the Engineer. Elsewhere, backfill and compact unauthorized excavations as specified for authorized excavations of the same classification, unless otherwise directed by the Engineer.

D. Additional Excavation

1. When the excavation has reached the required sub-grade elevations, Contractor shall notify the Contractor's qualified independent testing firm who will make an inspection of conditions. If wet conditions or otherwise unsuitable bearing materials are encountered at the required sub-grade elevations, Contractor shall modify their dewatering activities and allow the subgrade to dry to the optimum moisture content. If, after sufficient time to dry the subgrade, the soil continues to provide unsuitable bearing as determined by the qualified independent testing firm, the Contractor shall carry excavations deeper and replace the excavated material as described in Section 31 32 00 – Soil Stabilization. Removal of unsuitable material and its replacement shall be performed at no additional cost to the Owner.

E. Material Storage

1. Stockpile satisfactory excavated materials until required for backfill or fill. Place, grade and shape stockpiles for proper drainage. Locate and retain soil materials away from edge of excavations. Do not store within drip line of trees indicated to remain. Contain excavated silt/soil runoff with silt fences.

F. Excavation for Structure

1. Conform to elevations and dimensions shown within a tolerance of plus or minus 0.10 feet, and extending a sufficient distance from footings and foundations to permit placing and removal of concrete formwork, installation of services, other construction and for inspection.

2. In excavating for footings and foundations, take care not to disturb bottom of excavation. Excavate by hand to final grade just before concrete reinforcement or base material is placed. Trim bottoms to required lines and grades to leave solid base to receive other work. After completion of excavation and prior to placement of base material, excavations shall be inspected by the Engineer or the Contractor's qualified independent testing firm to insure that suitable bearing has been obtained. Twenty-four (24) hours notice shall be given to the Engineer.

3. Placing of footings and foundations on earth fill will not be permitted. Fill excess cuts under footings and foundations with MODOT Class C compacted to 100% Standard Proctor ASTM D698 and fill any excess cuts under slabs with lean concrete.

G. Excavation Near Utilities

1. Protect, support, shore, brace, etc. all utility services uncovered by excavation.
2. Accurately locate and record abandoned and active utility lines rerouted or extended, on Project Record Documents.
3. Repair damaged utilities to the satisfaction of the Utility Owner.

H. Disposal of Excess and Waste Materials

1. Removal from Owner's Property
   a. Remove waste materials, trash and debris and legally dispose of it off Owner's property at no expense to Owner.
2. Excess Material
   a. Excess excavated material shall be removed from the site and properly disposed of.

3.04 BACKFILLING AND COMPACTION

A. General

1. Definition
   a. Backfilling shall consist of placing and compacting the necessary fill materials within the space excavated for the structures to the grade limits shown on the drawings or as directed by the Engineer.
2. Place acceptable material in layers to required subgrade elevations, for each area classification listed below.
   a. In lawn or unpaved areas, use satisfactory excavated or borrow fill material.
   b. Buildings, structures, pavements, walks, steps, and slabs, use granular fill or base material as indicated.

B. Placement and Compaction

1. Place backfill, base and fill materials in layers not more than 8 inches in loose depth for material compacted by heavy compaction equipment and not more than 4 inches in loose depth for material compacted by hand operated tampers. Heavy equipment including compaction equipment shall not operate within 2 feet of substructure walls. Compaction in these areas shall be obtained with hand operated compaction equipment or devices.
2. Before compaction, moisten or aerate each layer as necessary to provide a placement with moisture content between 2% below and 3% above the optimum moisture content. Compact each layer to required percentage of maximum dry density or relative dry density for each area classification. Do not place backfill or fill material on surfaces that are muddy, frozen or contain frost or ice.
3. Place backfill and fill materials evenly adjacent to structure to required elevations. Take necessary precautions to prevent wedging action of backfill

against structures by carrying the material uniformly around structure to approximately same elevation in each lift.

4. Allow the Engineer or the qualified independent testing firm to inspect and test each fill layer before further construction work is performed.

C. Percentage of Maximum Density Requirements

1. Unless otherwise noted on the plan sheets, the Contractor shall compact each layer of soil to not less than the following percentages of maximum density for soils which exhibit a well-defined moisture density relationship (cohesive soils) determined in accordance with ASTM D698, Standard Proctor Compaction Test; and not less than the following percentages of relative density, determined in accordance with ASTM D 4253 and ASTM D 4254, for soils which will not exhibit a well-defined moisture-density relationship (cohesionless soils).

REQUIRED COMPACTIVE EFFORT				
MATERIAL TESTED	PROCTOR TYPE	MIN % DRY DENSITY	MOISTURE CONTENT	MIN FREQUENCY OF TESTING
Structural Fill	Standard	97%	-2 to +3%	1 per 2,500 sf of fill placed
Base Under Slabs and Pavements	Standard	97%	-2 to +3%	1 per 2,500 sf of fill placed
Landscape Fill (non-load bearing)	Standard	90%	-2 to +3%	1 per 5,000 sf of fill placed
Utility Trench	Standard	97%	-2 to +3%	1 per 200 lf of backfill placed

D. Moisture Control

1. Where subgrade or layer of soil material must be moisture conditioned before compaction, uniformly apply water to top surface of subgrade or layer of soil material, to prevent free water appearing on surface during or subsequent to compaction operations.

2. For subgrade soil materials that are too wet to permit compaction to the specified density and optimum moisture content, scarify and air-dry or remove and replace with suitable materials meeting the satisfaction of the Engineer.

E. Grading

1. General

a. Uniformly grade areas within limits of grading under this Section, including adjacent transition areas. Smooth finished surface within specified tolerances. Compact with uniform levels or slopes between points where elevations are indicated, or between such points and existing grades.

b. Loosen grades of lawn areas not receiving additional topsoil to a minimum depth of 4". Remove stones over 1-1/2" in any dimension and sticks, roots, rubbish and other extraneous matter.

c. Grading Outside Building Lines:
   i. Grade areas adjacent to building lines to drain away from structures and to prevent ponding.
   ii. Finish surfaces free from irregular surface changes within 0.10' above or below proposed subgrade elevation.

2. Grading Surface of Backfill Under Walks and Slabs
   a. Grade smooth and even, free of voids, compacted as specified, and to required elevation. Provide final grades within a tolerance of 1/4" when tested with a 10' straightedge.

3. Compaction
   a. After grading, compact subgrade surfaces to the depth and percentage of maximum or relative density for each area classification.

F. Maintenance

1. Protection of Graded Areas
   a. Protect newly graded areas from traffic and erosion. Keep free of trash and debris.
   b. Repair and re-establish grades in settled, eroded, and rutted areas to specified tolerances.

2. Reconditioning Compacted Areas
   a. Where completed fill areas are disturbed by subsequent construction operations or adverse weather, scarify surface, reshape and compact to required density prior to further construction.

3. Settling
   a. Where settling is measurable or observable at excavated areas during general project warranty period, remove surface (pavement, lawn or other finish), add backfill material, compact, and replace surface treatment. Restore appearance quality and condition of surface or finish to match adjacent work and eliminate evidence of restoration to greatest extent possible.

3.05 FILTER FABRIC INSTALLATION

A. Install filter fabric as shown on the drawings and in accordance with manufacturer's installation procedures, including lap splice and anchorage requirements. Minimum lap splice of filter fabric shall be 2'-0".

3.06 FIELD QUALITY CONTROL

A. The Contractor shall allow bearing surfaces at the bottom of excavations to be inspected by the Contractor's qualified independent testing firm prior to placement of any base materials, lean concrete mud slabs, or backfill materials.

B. Subgrades:

1. Proofrolling: Subgrades for pavements and large structures shall be proofrolled to detect areas of insufficient bearing, insufficient compaction, or areas of unstable soils. Proofrolling shall be accomplished by making minimum of 2 complete passes with fully-loaded tandem-axle dump truck with a maximum weight of 20 tons, or approved equal, in each of 2 perpendicular directions while under the supervision and direction of the

Contractor's qualified independent testing firm. Areas of failure shall be excavated and recompacted as specified herein. Continual failure areas shall be stabilized in accordance with Section 31 32 00 at no additional cost to Owner. Subgrade exposed longer than 48 hours or on which precipitation has occurred shall be re-proofrolled.

2. Visual inspections: subgrades for small or deep exacavations or for excavations that are not feasible to proofroll, the Contractor's qualified independent testing firm shall visually inspect and approve subgrades prior to the placement of base materials or mud slabs

C. The qualified independent testing firm, employed by and paid by the Contractor shall conduct compaction testing at intervals no less than the minimum requirements defined in Grain Valley Standard Specifications or as specified herein.

D. Allow the Engineer and the qualified independent testing firm to inspect and test subgrades and fill layers before further construction work is performed.

E. If in the opinion of the Engineer or the Contractor's qualified independent testing firm, based on proofrolls, field density tests, or inspections, subgrades and fills which have been placed below the specified density or subgrades and fills which exhibit the characteristics of unstable soils, the Contractor shall provide additional compaction, soil stabilization per Section 31 32 00, and/or removal and replacement of the material at no additional cost to the Owner.

3.07 PROTECTION

A. Stability of Excavation

1. Slope sides of excavations to comply with local codes and ordinances having jurisdiction. Shore and brace where sloping is not possible either because of space restrictions or stability of material excavated. Maintain sides and slopes of excavations in a safe condition until completion of backfilling.
2. Comply with current OSHA Occupational Safety and Health Standards - Excavations, 29 CFR Part 1926, including any successor regulations.
3. Where indicated on the drawings, sloped and vertical sides of excavations shall be stabilized with an erosion control system as specified in Section 31 25 00 – Erosion Control.

B. Cold Weather Protection

1. Protect excavation bottoms against freezing when atmospheric temperature is less than 35°F (1°C).

C. Protection of Persons and Property

1. Barricade open excavations occurring as part of this work and post with warning lights. Operate warning lights during hours from dusk to dawn each day and as otherwise required by authorities having jurisdiction.
2. Protect structures, landscaping, utilities, sidewalks, pavements or other facilities from damage caused by settlement, lateral movement, undermining, washout and other hazards created by earthwork operations.
3. Comply with current OSHA Occupational Safety and Health Standards - Excavations, 29 CFR Part 1926, including any successor regulations.

END OF SECTION 31 23 00

PART 1 GENERAL

1.01 SECTION INCLUDES

A. Maintaining excavations, including pipe and utility trenches, in a dewatered state to facilitate construction.

B. For the purpose of this section, the following definitions shall apply:
   1. Dewatering is defined as lowering of ground and surface water to ensure stable, firm working conditions and reduction to safe levels of any hydrostatic uplift pressures in any confined foundation strata and/or aquifers which is necessary to ensure stability and integrity of foundation.
   2. Dewatering system is defined as machinery, equipment and appurtenances necessary for and related to accomplishment of dewatering, and collection and disposal of all surface water within the protected area.

1.02 RELATED SECTIONS

A. Section 01 50 00 – Temporary Construction Facilities and Controls
B. Section 02 30 00 – Subsurface Investigation
C. Section 31 23 00 – Excavation and Fill
D. Section 31 23 33 – Trenching and Backfilling
E. Section 31 25 00 – Erosion and Sedimentation Control
F. Section 31 32 00 – Soil Stabilization
G. Division 03 – Concrete.

1.03 REFERENCE TO STANDARDS

A. Occupational Safety and Health Administration (OSHA): Contractor shall note the OSHA requirements for excavations, particularly requirements set forth in Federal Register, Tuesday, October 31, 1989, 29 CFR Part 1926. Compliance with this publication and any other OSHA excavation requirements is the Contractor's responsibility only.

1.04 SYSTEM DESCRIPTION

A. Dewatering System

The dewatering/support system shall be of a type and capacity to accomplish all requirements specified herein.
   1. The water level shall be maintained continuously so that construction operations can be performed without interruption due to wet conditions.
   2. The dewatering system shall be designed, constructed, and operated at all times so as to prevent movement of adjacent structures, foundations, excavation slopes, and backfill materials.

3. The dewatering systems shall consist of wells, pumps, sumps, ditches, and necessary appurtenances capable of intercepting seepage before it exits on any interior surface or excavation face and of providing control of interior (excavation) surface water. The system shall be operated as required in paragraph 1 above to prevent damage to the work. Protection of all slopes will be required to prevent erosion under normal surface runoff and construction conditions.
4. Power for the dewatering system shall be supplied in accordance with Section 01 50 00 – Temporary Construction Facilities. The Contractor shall furnish diesel or gasoline fueled portable electric generators for standby power for all pumps in service at the site.
5. Discharges from the dewatering system must be directed through an appropriate pollution prevention/treatment measure such as a pump discharge filter bag, sediment trap, or sediment basin prior to being discharged from the site.

1.05 SUBMITTALS

A. Submit under the provisions of Division 1, Section 01 33 00 – Submittal Procedures.

B. Shop Drawings: Drawings and complete design data showing proposed methods and equipment to be utilized in dewatering, retention of excavation slopes, and in maintaining the excavation in a dewatered condition shall be submitted to the Engineer for review within sixty (60) calendar days after receipt of Notice to Proceed or thirty (30) days minimum prior to installation. The data to be submitted shall include, but not necessarily be limited to, the following:
1. Drawings indicating the location and size of all equipment.
2. Capacities of pumps, prime movers, and standby equipment.
3. Design calculations proving adequacy of system and selected equipment.
4. Detailed description of dewatering procedure, maintenance, and plan for monitoring operation of the systems.
5. Detailed description of the pollution prevention/treatment measure used to prevent the discharge of sediment laden water from the site as required by Section 31 25 00.

C. The Engineer's review and comment on the as-submitted plan or revised plan shall not be interpreted as the Owner or the Engineer accepting responsibility for the performance of the dewatering system and shall not relieve the Contractor of full responsibility for the proposed design, installation, maintenance, operation, and actual performance of both the individual system components and the entire system.

1.06 QUALIFICATIONS

A. The design of the dewatering system, supervision of the installation and supervision of the construction operations associated with deep excavation shall be made by qualified individual(s) in this type of work.

B. Design for the dewatering system associated with the temporary excavation support system shall be performed by or under the direction of a Licensed Professional Engineer, registered in the State of Missouri (Designer of Record). The design drawings and associated calculations for the dewatering system shall bear the seal of the Licensed Professional Engineer, registered in the State of Missouri. There shall be no exceptions to this requirement.

1.07 QUALITY ASSURANCE

A. Once installed and tested, the Contractor shall establish and maintain quality control for all dewatering operations to assure compliance with contract requirements.

1.08 MAINTENANCE SERVICE

A. If, during the progress of work, installed dewatering system proves inadequate to meet the requirements specified, the Contractor shall, at his expense, furnish, install, and operate such additional dewatering facilities and/or make such changes, either in features of system or plan of operation, as may be necessary to perform required dewatering in a satisfactory manner. Such changes and additions shall be submitted in writing to Engineer prior to being made.

PART 2 PRODUCTS – NOT USED

PART 3 EXECUTION

3.01 EXAMINATION (RESERVED)

3.02 PREPARATION (RESERVED)

3.03 DEWATERING

A. Design

1. Design, furnish, install, operate and maintain such facilities necessary to accomplish the following:
    a. Protect excavation walls and/or side slopes as well as existing and new construction adjacent to excavation areas.
    b. Collect and dispose of all surface water in the protected area regardless of source.
    c. Control and dispose of all surface water around the periphery of the excavation area to prevent such water from entering the excavation.

2. The design, installation, construction sequence, and operation of different items of work shall be such that there shall be no loss of ground from the bottoms of excavations or around the areas of construction.

The excavations shall remain dewatered as specified until backfilled to the original surface or proposed grade.

B. Damage Restitution

1. The Contractor shall be responsible for and shall repair without cost to the Owner, any damages to work in place, other contractor's equipment, existing facilities, temporary berms, and excavation, including damage to the bottom of the excavation, including removal of material and pumping out of the excavated area, that may result from his negligence, inadequate or improper design and operation of the dewatering system, any mechanical or electrical failure of the dewatering system, or flooding for any other reason.

C. Operation

1. The Contractor will be required to perform such dewatering and to maintain the work areas in a dry condition as long as is necessary for the work to be completed under this contract. Once an area is dewatered, it shall be maintained in a dewatered condition until all work in that area is completed and the excavation is backfilled to the original surface or proposed grade.
2. Maintain piezometric water level a minimum of 24 inches below bottom of excavation.

D. Control of Water

1. The Contractor shall control, by acceptable means, all water regardless of source. The site shall be graded such that all surface drainage shall be away from excavation areas. All access roads in the vicinity of the excavations shall be constructed so as to prevent surface drainage into the excavations. Discharge from wellpoints or dewatering sumps shall be at approved locations so as not to damage existing facilities or new construction. The Contractor shall be fully responsible for the disposal of the water in accordance with Section 31 25 00 – Erosion Control and the project SWPPP and shall provide all necessary means to accomplish this at no additional cost to the Owner.

E. Maintenance and Service

1. The Contractor shall be responsible for the maintenance, service, and repairs of the entire dewatering system and appurtenances during the life of the Contract, including replacement of any and all wells and wellpoints found performing unsatisfactorily.
2. System maintenance shall also include periodic operation of standby equipment previously described in this Specification, and any other work required by the Contractor to maintain the excavations in a dewatered state. Dewatering by whatever means shall be a continuous operation and interruptions due to outages, below freezing temperatures, or any other reason shall not be permitted.

F. Discontinuing Operation of Dewatering Systems

1. The Contractor shall maintain the dewatering system in each area in operation until work in the area being dewatered has been completed.

END OF SECTION 31 23 19

PART 1 GENERAL

1.01 RELATED DOCUMENTS

A. Drawings and general provisions of the Contract, including General and Supplementary Conditions and Division 01 Specification Sections, apply to this Section.

1.02 SUMMARY

A. Excavation and backfill for buried utilities and piping as required under the project.

B. Controlled Low Strength Material

1. Section includes furnishing of all labor, materials and all other incidental work to place controlled low strength material in pipe excavations, under structures, and at locations as shown on the drawings and in accordance with these specifications.

C. Related Sections

1. Section 01 50 00 – Temporary Construction Facilities and Controls
2. Section 02 30 00 – Subsurface Investigation
3. Section 31 11 00 – Site Preparation
4. Section 31 23 19 - Dewatering
5. Section 31 25 00 – Erosion and Sedimentation Control
6. Section 31 32 00 – Soil Stabilization
7. Section 31 41 00 – Shoring
8. Section 33 05 00 – Buried Piping
9. Division 03 – Concrete
10. Division 26 - Electrical
11. Division 33 – Utilities

D. Reference to Standards

1. American Safety for Testing and Materials (ASTM).
2. Grain Valley Standard Details
3. Occupational Safety and Health Administration (OSHA): Current OSHA Occupational Safety and Health Standards - Excavations, 29 CFR Part 1926, including any successor regulations.
4. Ductile Iron Pipe Research Associate (DIPRA) “Installation Guide for Ductile Iron Pipe,” latest edition.
5. ANSI/AWWA C600-93, AWWA Standard for Installation of Ductile-Iron Water Mains and their Appurtenances, as published by American Water Works Association.

6. ANSI/AWWA C605-94, AWWA Standard for Installation of Polyvinyl Chloride (PVC) Pressure Pipe and Fittings for Water, as published by American Water Works Association.
7. ASTM D698 - Test Method for Laboratory Compaction Characteristics of Soil Using Standard Effort (12,400 ft-lbf/ft^3).
8. ASTM D2321-04 - Standard Practice for Underground Installation of Thermoplastic Pipe for Sewers and Other Gravity-Flow Applications.
9. ASTM D5971 – Standard Practice for Sampling Freshly Mixed Controlled Low-Strength Material.
10. ASTM D6103 – Standard Test Method for Flow Consistency of Controlled Low-Strength Material (CLSM).

E. Regulatory Requirements
1. Perform excavation and backfilling work in compliance with applicable requirements of governing authorities having jurisdiction.
2. Prior to the commencement of construction, the Contractor shall be aware of, and become familiar with applicable local, state and federal safety regulations, including the current OSHA Occupational Safety and Health Standards - Excavations, 29 CFR Part 1926, including any successor regulations.
3. Additionally, the Contractor shall be aware that slope height, slope inclination and excavation depths (including utility trench excavations) should in no case exceed those specified in local, state or federal safety regulations.

1.03 DEFINITIONS

A. Suitable Soil: Suitable soil is a soil having less than 6% organic matter by weight as determined by Loss on Ignition Test (determine weight loss caused by heating sample to 500 degrees C for six hours after drying in accordance with ASTM D-2216, “Laboratory Determination of Moisture Content of Soil”).

B. Unsuitable Soil: Unsuitable soil is a soil that contains 6% or more organic matter as determined by the Loss on Ignition test, soils with a Proctor maximum dry density less than 100 pcf, soils with a Plasticity Index of less than 4, shale, weathered shale, coal, rubbish, vegetable matter of any kind, roots and rocks larger than two inches in dimension which might interfere with the proper bonding to adjacent surfaces, or as otherwise determined unsuitable by Engineer or the Engineer’s qualified independent testing laboratory.

C. Stable Soil: soil is considered sufficiently stable when it
1. Prevents rutting and shoving during standard construction practices
2. Limits the amount of rebound deflections under wheel loadings (pumping)
3. Provides good support of placement and compaction of subsequent layers of fill.

D. Dewatering is defined as lowering of ground water to ensure stable, firm working conditions and reduction to safe levels of any hydrostatic uplift pressures in any confined foundation strata and/or aquifers which is necessary to ensure stability and integrity of foundation.

E. Dewatering system is defined as machinery, equipment and appurtenances necessary for and related to accomplishment of dewatering, and collection and disposal of all surface water within the protected area.

F. Cohesionless Soils: Soils which do not demonstrate a well-defined moisture-density relationship in compaction testing. Also referred to as granular soils.

G. Cohesive Soils: Soils which demonstrate a well-defined moisture-density relationship in compaction testing.

H. Pavement or Paved Surfaces: Existing or proposed surface treatments of bituminous asphalt, Portland cement concrete, or compacted aggregate.

I. Type A Trench: Pipe trench for all pipes below structures extending to five feet beyond outside limits of any structure.

J. Type B Trench: Pipe trench for flexible pipes including the following materials: PVC, CPVC, GFRPM, HDPE Polyethylene, and Polypropylene up to five feet beyond the outside limits of any structure.

K. Type C Trench: Pipe trench for semi-rigid pipes including the following materials: Cast Iron, Ductile Iron, Steel, and Copper up to five feet beyond the outside limits of any structure.

L. Type D Trench: Pipe trench for rigid pipes including the following materials: Reinforced Concrete (RCP) up to five feet beyond the outside limits of any structure.

M. Foundation: The natural or improved bottom of the trench which supports the pipe and its bedding.

N. Bedding: The four (4) inch minimum layer of material on which the pipe lies.

O. Haunching: The material placed on each side of the installed pipe, from the top of bedding to the centerline of the pipe.

P. Initial Backfill: The backfill from the centerline of the pipe to twelve (12) inches above the top of the pipe.

Q. Final Backfill: The backfill from twelve (12) inches over the top of the pipe to the top of the trench.

1.04 COORDINATION

A. Do not interrupt existing utilities serving facilities occupied and used by Owner or others except when permitted in writing by the Engineer and then only after acceptable temporary utility services have been provided. Provide minimum of 48 hour notice prior to enacting an approved temporary interruption.

1.05 SUBMITTALS

A. Submit under the provisions of Division 1, Section 01 33 00 – Submittal Procedures. All materials shall be submitted for approval. Samples shall be submitted when requested by the Engineer.

B. Manufacturer's Certificate and Product Data: Certify that products meet or exceed specified requirements.

C. The Contractor shall submit a list of equipment intended to be utilized on this project to the Engineer.

D. Controlled Low Strength Material

1. Design Data: Submit mix design data to the Engineer for review in accordance with Section 01 33 00 – Submittal Procedures.
2. Material Certifications: For each item listed, submit information indicated.
   a. Fine Aggregate
      i. Producer name
      ii. Quarry Location.
      iii. Contact Person and Phone Number.
      iv. Material Test Reports: From a qualified testing agency, indicating compliance with requirements.
      v. Specific Gravity.
      vi. Moisture Content.
   b. Cement
      i. Mill Test Report.
      ii. Producer Name and Location.
   c. Water
      i. Specify Potable Water Source
3. CLSM Mix Properties: Submit the following information:
   a. Mix Design
      i. Cementitious Materials (Lbs./C.Y.)
      ii. Fine Aggregate (Lbs./C.Y.)
      iii. Water (Lbs./C.Y.)
      iv. Admixtures.
   b. Slump/Flow Specified
   c. Air Content Specified
4. Mix Plant Certification: Provide certification of plant inspection (within past 12 months) and provide contact person name, address, and phone number at plant.

1.06 FIELD TESTING

A. Provide in accordance with Division 1, Section 01 45 00 – Quality Requirements.

B. Compaction Tests

1. Standard Proctor Density Testing and Compaction Testing of fill materials and inspection of subgrades and fill layers will be performed by the Contractor's qualified independent testing laboratory. Contractor shall inform Engineer 24 hours in advance of soil compaction operations.
2. If in the opinion of the Contractor's qualified independent testing firm, based on proofrolls, field density tests, or inspections, subgrades and fills which have been placed below the specified density or subgrades and fills which exhibit the characteristics of unstable soils, the Contractor shall provide additional compaction, soil stabilization per Section 31 32 00, and/or removal and replacement of the material at no additional cost to the Owner.

3. When, during progress of work, tests indicate that compacted materials will not meet specifications, remove defective work, replace and retest at no additional cost to the Owner.
4. Ensure that all compacted fills are tested before proceeding with placement of surface materials.

PART 2 PRODUCTS

2.01 GENERAL

A. Native soil salvaged from the trench excavation for use as backfill shall meet the requirements of Suitable Soil as defined in Section 31 23 00 and shall not exceed the allowable moisture content per Section 31 23 00. Native soil that is deemed as Unsuitable Soil as defined in Section 31 23 00 shall be disposed of off-site at no additional cost to the Owner.

B. Fill materials shall be placed at or near their optimum moisture content to achieve the specified compaction.

C. Contractor shall engage a qualified independent testing laboratory to test materials from on-site and off-site sources to test materials for conformance to this specification.

2.02 PIPE FOUNDATION

A. Granular bedding shall be crushed rock or pea gravel with not less than 95% passing 3/4" (95% passing 1" for 30* and larger pipe) and not less than 95% retained on a 3/8". To be placed in not more than 6" layers and compacted by slicing with a shovel or vibrating. Tamped granular backfill (type 5) shall be granular material conforming to the requirements of section 1007.3 of the 2019 Missouri standard specifications for highway construction. Trench backfill (type 1) shall be finely divided material free from debris and stones, compacted to 95% maximum density. Flowable fill or type 5 aggregate compacted to 95% of standard density with testing each lift is required under existing or proposed pavement. All material shall be compacted to 95% in the right of way and 90% outside of the right of way.

B. At pipe crossing locations, the bedding, haunching, initial backfill, and final backfill of the lower pipe trench shall meet the requirements of trench backfill under paved surfaces, as specified herein, in order to provide a solid foundation for the upper pipe.

2.03 BACKFILL MATERIAL - TYPE A TRENCH

A. Bedding, Haunching, Initial Backfill and Final Backfill Material in Type A trench areas below structures and extending to five (5) feet beyond the outside limits of the structure shall be CLSM.

2.04 BACKFILL MATERIAL - TYPE B TRENCH

A. Areas under or within five feet of pavement or paved surfaces:

1. Bedding material in a Type B trench shall conform to APWA Standards for compacted to 97% standard proctor density. Bedding shall have a minimum thickness of 4”.
2. Haunching material in a Type B trench shall conform to APWA Standards for compacted to 97% standard proctor density. Haunching shall be placed in compacted lifts not exceeding 6”.
3. Initial Backfill material in a Type B trench shall conform to APWA Standards for compacted to 97% standard proctor density. Initial Backfill shall be placed in compacted lifts not exceeding 8”.
4. Final Backfill material in a Type B trench shall conform to APWA Standards for compacted to 97% standard proctor density. Final Backfill shall be placed in compacted lifts not exceeding 8”.

B. Unpaved areas:
1. Bedding material in a Type B trench shall conform to APWA Standards for compacted to 97% standard proctor density. Bedding shall have a minimum thickness of 4”.
2. Haunching material in a Type B trench shall conform to APWA Standards for compacted to 90% standard proctor density. Haunching shall be placed in compacted lifts not exceeding 6”.
3. Initial Backfill material in a Type B trench shall conform to APWA Standards for compacted to 90% standard proctor density. Initial Backfill shall be placed in compacted lifts not exceeding 8”.
4. Final Backfill material in a Type B trench shall be native soil conforming to section 2.01 of this specification compacted to 90% standard proctor density. Final Backfill shall be placed in compacted lifts not exceeding 8”.

2.05 BACKFILL MATERIAL - TYPE C TRENCH

A. Areas under or within five feet of pavement or paved surfaces:
1. Bedding material in a Type C trench shall conform to APWA Standards for compacted to 97% standard proctor density. Bedding shall have a minimum thickness of 4”.
2. Haunching material in a Type C trench shall conform to APWA Standards for compacted to 97% standard proctor density. Haunching shall be placed in compacted lifts not exceeding 6”.
3. Initial Backfill material in a Type C trench shall conform to APWA Standards for compacted to 97% standard proctor density. Initial Backfill shall be placed in compacted lifts not exceeding 8”.
4. Final Backfill material in a Type C trench shall conform to APWA Standards for compacted to 97% standard proctor density. Final Backfill shall be placed in compacted lifts not exceeding 8”.

B. Unpaved areas:
1. Bedding material in a Type C trench shall conform to APWA Standards for compacted to 97% standard proctor density. Bedding shall have a minimum thickness of 4”.

2. Haunching material in a Type C trench shall conform to APWA Standards for compacted to 97% standard proctor density. Haunching shall be placed in compacted lifts not exceeding 6”.
3. Initial Backfill material in a Type C trench shall conform to APWA Standards for compacted to 90% standard proctor density. Initial Backfill shall be placed in compacted lifts not exceeding 8”.
4. Final Backfill material in a Type C trench shall be native soil conforming to section 2.01 of this specification compacted to 90% standard proctor density. Final Backfill shall be placed in compacted lifts not exceeding 8”.

2.06 BACKFILL MATERIAL - TYPE D TRENCH

A. Areas under or within five feet of pavement or paved surfaces:
1. Bedding material in a Type D trench shall conform to APWA Standards for compacted to 97% standard proctor density. Bedding shall have a minimum thickness of 4”.
2. Haunching material in a Type D trench shall conform to APWA Standards for compacted to 97% standard proctor density. Haunching shall be placed in compacted lifts not exceeding 6”.
3. Initial Backfill material in a Type D trench shall conform to APWA Standards for compacted to 97% standard proctor density. Initial Backfill shall be placed in compacted lifts not exceeding 8”.
4. Final Backfill material in a Type D trench shall conform to APWA Standards for compacted to 97% standard proctor density. Final Backfill shall be placed in compacted lifts not exceeding 8”

B. Unpaved areas:
1. Bedding material in a Type D trench shall conform to APWA Standards for compacted to 97% standard proctor density. Bedding shall have a minimum thickness of 4”.
2. Haunching material in a Type D trench shall conform to APWA Standards for compacted to 97% standard proctor density. Haunching shall be placed in compacted lifts not exceeding 6”.
3. Initial Backfill material in a Type D trench shall be native soil conforming to section 2.01 of this specification compacted to 90% standard proctor density. Initial Backfill shall be placed in compacted lifts not exceeding 8”.
4. Final Backfill material in a Type D trench shall be native soil conforming to section 2.01 of this specification compacted to 90% standard proctor density. Final Backfill shall be placed in compacted lifts not exceeding 8”.

2.07 TEMPORARY SURFACE OVER TRENCH

A. Proper operation of the Owner’s existing facility until the proposed pavement or existing pavement replacement is installed.

PART 3 EXECUTION

3.01 EXAMINATION

A. Site Information

1. Data indicated on subsurface conditions are not intended as representations or warranties of accuracy or continuity between soil borings. It is expressly understood that Owner, and Engineer will not be responsible for interpretations or conclusions drawn therefrom by Contractor. Data, if available, are made available for convenience of Contractor.
2. Contractor shall be responsible for determining the actual ground water elevation and soil conditions at the specific site prior to commencing with the excavation. It may be expedient to drill auger holes, excavate test pits or make additional soil borings at or adjacent to the construction area immediately prior to construction to determine the prevailing soil conditions and water table elevation. It is the Contractor's responsibility to make auger holes, excavate test pits or make additional soil borings as he deems appropriate to determine the ground water and soil conditions that will be encountered. Additional test borings and other exploratory operations made by the Contractor shall be at no cost to the Owner.

3.02 PREPARATION

A. Establish extent of excavated areas.

B. Set specified lines, levels, contours and grades.

C. Maintain bench marks, monuments and other reference points.

D. Before starting excavation, establish location and extent of underground utilities occurring in work area. Contact Joint Utility Locating Information For Excavators Missouri One Call or 811 for all other utility companies on the project site which are not members of this system. If the Contractor ruptures or causes damage to such objects while digging or during any construction, it is the responsibility of the party performing the construction work to pay the utility company for repairs and such costs shall not be borne by the Owner or the Engineer.

E. Maintain, reroute or extend existing utility lines to remain which pass through work area.

F. Backfilling and compaction shall not occur until the following conditions are satisfied:

1. Acceptance by the Engineer of construction below finish grade.
2. Inspection, testing, approval and recording locations of underground utilities.
3. Removal of trash and debris, vegetation, snow or ice, water, unsatisfactory soil materials, obstructions and deleterious materials.
4. Removal of shoring and bracing and backfilling of voids with satisfactory material.

3.03 EXCAVATION, BACKFILL, AND COMPACTION

A. Trench excavations shall be protected in accordance with the applicable federal, state, and local regulations, laws, and rules; but shall not be less than the standards and regulations established by OSHA in 29 CFR Part 1926.

B. The Contractor is solely responsible for designing and constructing stable excavations and should shore, slope, or bench the sides of the excavations as required to maintain stability of both the excavation sides and bottom. All excavations shall comply with applicable local, state and federal safety regulations including the current OSHA Occupational Safety and Health Standards - Excavations, 29 CFR Part 1926, including any successor regulations.

C. If the contractor elects to construct the trench with sloped or benched sides in lieu of shoring, no additional compensation will be allowed for the trench backfill material required outside the vertical limits of the specified trench width.

D. Dewatering of pipe and utility trenches, shall be performed in accordance with Section 31 23 19 – Dewatering.

E. Haunching or backfill materials disturbed by moving or removing any shoring shall be removed, replaced, and recompacted in accordance with this specification.

F. The trench bottom shall be excavated and prepared to provide uniform, stable support of the pipe. Relief cuts shall be made at pipe bells, fittings, and couplings.

G. The trench shall be dewatered until backfill as been placed to prevent softening of the foundation and to prevent buoyant forces from deflecting the pipe alignment and grade. Dewatering shall be implemented at no additional cost to the owner.

H. Haunching shall be worked around the pipe by hand to eliminate voids underneath the pipe.

I. Backfill materials shall be placed and compacted as per Section 31 23 00 – Excavation and Fill and as specified herein.

J. Before compaction, moisten or aerate each layer as necessary to provide a placement with moisture content between 2% below and 3% above the optimum moisture content. Compact each layer to required percentage of maximum dry density or relative dry density for each area classification. Do not place backfill or fill material on surfaces that are muddy, frozen or contain frost or ice.

K. Allow the Engineer or the qualified independent testing firm to inspect and test each fill layer before further construction work is performed.

L. Contractor shall compact each layer of trench backfill to not less than the percentages of maximum density listed for each type of trench listed in Part 2, above.

M. All excavations located in a street, highway, or parking pavement shall be backfilled by the end of the workday and shall not be left open overnight. Trenches not located in a pavement may be left open only if surrounded by construction fence and barricades.

N. Stockpile satisfactory excavated materials until required for backfill or fill. Place, grade and shape stockpiles for proper drainage. Locate and retain soil materials away from edge of excavations. Do not store within drip line of trees indicated to remain. Contain excavated silt/soil runoff with silt fences in accordance with the project SWPPP.

3.04 FIELD QUALITY CONTROL

A. The Contractor shall allow bearing surfaces at the bottom of excavations to be inspected by the Contractor's qualified independent testing firm prior to placement of any backfill materials.

B. The qualified independent testing firm, employed by and paid by the Contractor shall conduct compaction testing at intervals no less than 1 test per 200 lineal feet of trench backfill place, for every lift of backfill.

C. Allow the Engineer or the qualified independent testing firm to inspect and test subgrades and fill layers before further construction work is performed.

D. If in the opinion of the Engineer or the Contractor's qualified independent testing firm, based on field density tests, or inspections, subgrades and fills which have been placed below the specified density or subgrades and fills which exhibit the characteristics of unstable soils, the Contractor shall provide additional compaction, soil stabilization per Section 31 32 00, and/or removal and replacement of the material at no additional cost to the Owner.

3.05 PROTECTION

A. Stability of Excavation

1. Slope sides of excavations to comply with local codes and ordinances having jurisdiction. Shore and brace where sloping is not possible either because of space restrictions or stability of material excavated. Maintain sides and slopes of excavations in a safe condition until completion of backfilling.
2. Comply with current OSHA Occupational Safety and Health Standards - Excavations, 29 CFR Part 1926, including any successor regulations.
3. Where indicated on the drawings, sloped and vertical sides of excavations shall be stabilized with an erosion control system as specified in Section 31 25 00 – Erosion and Sedimentation Control.

B. Protection of Persons and Property

1. Barricade open excavations occurring as part of this work and post with warning lights. Operate warning lights during hours from dusk to dawn each day and as otherwise required by authorities having jurisdiction.
2. Protect structures, landscaping, utilities, sidewalks, pavements or other facilities from damage caused by settlement, lateral movement, undermining, washout and other hazards created by earthwork operations.
3. Comply with current OSHA Occupational Safety and Health Standards - Excavations, 29 CFR Part 1926, including any successor regulations.

3.06 EXCESS DIRT

A. Excess spoils shall be hauled from the site and disposed of by the Contractor.

3.07 JETTING OF TRENCHES WITH WATER

A. Jetting of trench backfill materials is NOT an acceptable means of consolidation and will NOT be allowed on this project.

END OF SECTION 31 23 33

PART 1 GENERAL

1.01 RELATED DOCUMENTS

A. Drawings and general provisions of the Contract, including General and Supplementary Conditions and Division 01 Specification Sections, apply to this Section.

1.02 SUMMARY

A. Section Includes
   1. Installation of temporary and permanent erosion and sedimentation control systems.
   2. Installation of temporary and permanent slope protection systems.

B. Related Sections and Documents
   1. Section 02 41 00 – Demolition and Abandonment
   2. Section 31 11 00 – Site Preparation
   3. Section 31 23 00 – Excavation and Fill
   4. Section 31 23 19 - Dewatering
   5. Section 31 23 33 – Trenching and Backfilling
   6. Section 31 32 00 – Soil Stabilization

C. Reference to Standards
   1. Grain Valley Standard Specifications

D. ENVIRONMENTAL REQUIREMENTS
   1. Protect adjacent properties, any identified endangered or threatened species and/or critical habitat, any identified cultural or historic resources, and receiving water resources from erosion and sediment damage until final stabilization is achieved. All storm water controls and systems must be installed & functioning as designed and free of accumulated sediment and debris before final project approval.

1.03 SUBMITTALS

A. Contractor shall submit shop drawings or material certifications for all manufactured erosion and sediment control materials.

PART 2 PRODUCTS

2.01 MATERIALS

A. Seed, sod, and ground covers for the establishment of vegetation in accordance with Section 32.

B. All erosion control products, sediment control devices, or materials for non-storm water BMPs as specified herein and on the Construction Drawings.

C. Rolled erosion control products according to Erosion Control Technology Council (ECTC) standard specifications.

1. Erosion Control Blanket for slope installations shall be North American Green ERONET S150 Short-term Photodegradable Double-Net Straw Blanket or approved equal
2. Erosion Control Blanket for channel installations shall be North American Green ERONET C125 Long-Term Photodegradable Double-Net Coconut Blanket or approved equal

D. Temporary mulches such as loose straw, wood cellulose, or hydraulically applied materials.

E. Rip-Rap (stone protection) as specified on Plans.

F. Temporary and permanent outfall structures as specified on the drawings.

PART 3 EXECUTION

3.01 AREA OF DISTURBANCE AND PERMITTING REQUIREMENTS

A. It is anticipated that a majority of the scope of improvements for this project will result in an area of disturbance less than one (1) acre. The Contractor shall be responsible for planning his activities and notifying the Owner's Representative ahead of time if the construction activities will disturb one acre of area or greater.

3.02 EROSION AND SEDIMENTATION CONTROL AND SLOPE PROTECTION IMPLEMENTATION

A. Place erosion and sediment control systems to prevent sediment run off to ditches or movement in shallow concentrated flow around work areas.

B. The Contractor shall modify installed Best Management Practices to conform to changing conditions throughout construction. Contractor shall also be required to maintain all installed Best Management Practices.

C. The Owner has authority to limit surface area of erodible earth material exposed by clearing and grubbing, excavation, borrow and embankment operations and to direct Contractor to provide immediate permanent or temporary pollution control measures.

D. Maintain erosion and sedimentation control systems as dictated by site conditions, indicated in the construction documents, or as directed by governing authorities or Owner to prevent erosion and control sediment until final stabilization. Contractor shall respond to maintenance or additional work ordered by Owner at no additional cost to the Owner.

E. Contractor shall incorporate permanent erosion control features, permanent slope stabilization, and vegetation into project at earliest practical time to minimize need for temporary controls.

F. Permanently seed and mulch cut and fill slopes as construction proceeds to extent considered desirable and practical.

END OF SECTION 31 25 00

PART 1 GENERAL

1.01 RELATED DOCUMENTS

A. Drawings and general provisions of the Contract, including General and Supplementary Conditions and Division 01 Specification Sections, apply to this Section.

1.02 SUMMARY

A. Excavation, treatment, and backfilling of subgrade.

B. Geotextile fabric and geogrid for stabilization of subgrade.

C. Related Sections
   1. Section 31 23 00 – Excavation and Fill
   2. Section 31 23 33 – Trenching and Backfilling

D. Reference to Standards

   1. ASTM International (ASTM)
   2. ASTM C150 - Portland Cement.
   3. ASTM C618 - Fly Ash and Raw or Calcined Natural Pozzolan for use as a Mineral Admixture in Portland Cement Concrete.
   4. ASTM C977 - Quicklime and Hydrated Lime for Soil Stabilization.
   5. ASTM D1633 - Compressive Strength of Molded Soil-Cement Cylinders.
   6. AASHTO M216 - Lime for Soil Stabilization.
   7. NLA Bulletin 326 - Lime Stabilization Construction Manual.

E. ENVIRONMENTAL REQUIREMENTS
   1. Do not install mixed materials in wind in excess of 10 mph or when temperature is below 45 degrees Fahrenheit. Additionally, the temperature of the soil, measured 6” below the surface shall be a minimum of 50 degrees Fahrenheit.

1.03 SUBMITTALS

A. Submit gradation and certification that material meets the minimum requirements of the Missouri Department of Transportation.

B. Submit name of each materials supplier and specific type and source of each material. Obtain approval of Owner prior to change in source.

C. Submit mix designs, materials mix ratio, and laboratory test data to the Engineer per Section 01 33 00 – Submittal Procedures. Certify materials and mix ratios will achieve the specified requirements as indicated in the Construction

Documents or as specified by state and local agencies for soil stabilization if not stated in the Construction Documents.

1.04 QUALITY ASSURANCE

A. Perform work in accordance with state and local standards in conjunction with requirements specified herein.

PART 2 PRODUCTS

2.01 MANUFACTURERS

A. Provide products from one of the following manufacturers as specified in the Materials paragraph below:

1. TenCate Geosynthetics Americas, Pendergrass, GA., (706) 693-2226, www.tencate.com
2. WEBTEC, INC., Charlotte, NC. (800) 438-0027, www.Webtecgeos.com
3. Tensar International Corporation, Alpharetta, GA. (800) 292-4459, www.tensarcorp.com
4. Thrace-LINQ Inc., Summerville, SC (800) 445-4675, www.thracelinq.com

2.02 MATERIALS

A. Soil Treatment Materials:

1. Hydrated Lime: Code L, ASTM C207 Type N
2. Portland Cement: ASTM C150, Type I.

B. Aggregate

1. Coarse Aggregate: Crushed carbonate, crushed gravel, crushed air-cooled slag, granulated slag, a mixture of crushed and granulated slag, or other types of suitable material meeting the following gradation requirements:

Sieve Size	Percent Passing
2 inches	100
1 inch	70-100
3/4 inch	50-90
No. 4	30-60
No. 30	7-30
No. 200	0-5

C. Subsoil: Existing to be reused.

2.03 ACCESSORIES

A. Curing Seal: Asphalt Emulsion Primer.

B. Geotextile Fabric for Stabilization: Provide one of the following:

1. Mirafi HP 370 or HP 570, by Marafi.
2. SF40 or SF56, by Dupont.
3. GTF-200 or 300, by Thrace-LINQ Inc.
4. TerraTex HD, by WEBTEC.

C. Geogrid for Stabilization: Provide one of the following:
1. Geogrid BX 1100, by Tensar.
2. Geogrid BX 1200, by Tensar.
3. Mirafi BasXgrid 11, by Marafi.
4. Mirafi BasXgrid 12, by Marafi.

PART 3 EXECUTION

3.01 PREPARATION

A. Obtain approval of mix design before proceeding with placement.

B. Start stabilization only when weather and soil conditions are favorable for successful application of proposed material.

C. Identify areas in need of stabilization by proofrolling subgrade or by inspection by the Independent Testing Lab.

3.02 EQUIPMENT

A. Perform operations using suitable, well-maintained equipment capable of excavating subsoil, mixing and placing materials, wetting, consolidating, and compacting of material.

3.03 EXCAVATION

A. Excavate subsoil to depth sufficient to accommodate soil stabilization.

B. Remove lumped subsoil, boulders, and rock that interfere with achieving uniform subsoil conditions.

C. Do not excavate within normal 45 degree bearing splay of any foundation.

D. Notify Engineer of unexpected subsurface conditions. Discontinue affected work in area until notified to resume work.

E. Correct areas over-excavated in accordance with Section 31 23 00 and as described herein.

F. Remove excess excavated material from site.

3.04 SOIL TREATMENT AND BACKFILLING

A. Lime Stabilized Subgrade: Where indicated on Construction Drawings or as required after continual failure, treat prepared subgrade with hydrated lime in accordance with state highway department specifications.

B. Cement Stabilized Subgrade: Where indicated on Construction Drawings or as required after continual failure, treat prepared subgrade with portland cement in accordance with state highway department specifications.

C. Backfill and compaction of treated subsoil shall be in accordance with Sections 31 23 00.

D. Maintain optimum moisture of mixed materials to attain required stabilization and compaction.

E. Finish subgrade surface in accordance with Section 31 23 00.

F. Remove surplus materials from site.

3.05 CURING

A. Immediately following compaction of mix, seal top surface with curing seal.

B. Do not permit traffic for 72 hours after sealing top surface.

3.06 FIELD QUALITY CONTROL

A. Responsibilities: Unless otherwise specified, the quality control tests and inspections specified below will be conducted by the Contractor's qualified independent testing firm at no cost to the Owner in accordance with Section 01 45 00. The Contractor shall perform additional testing or inspection as considered necessary by the Contractor for assurance of quality control.

B. Field Density: Field in-place density shall be determined as specified in Section 31 23 00.

C. If tests indicate work does not meet specified requirements, Contractor shall remove and replace work. Corrected areas shall be retested.

END OF SECTION 31 32 00

PART 1 GENERAL

1.01 RELATED DOCUMENTS

A. Drawings and general provisions of the Contract, including General and Supplementary Conditions and Division 01 Specification Sections, apply to this Section.

1.02 SUMMARY

A. Section Includes

1. Support and maintain excavations as required for construction of structures and all other excavations as deemed necessary by the Contractor.
2. Support existing pipes and other utilities during excavating and construction.
3. For the purpose of this section, the following definition shall apply:
4. Excavation Support System is defined as methods of stabilizing the excavation slopes for the construction of the various facilities.

B. Related Sections

1. Section 31 23 00 – Excavation and Fill
2. Section 31 23 19 – Dewatering
3. Section 31 23 33 – Trenching and Backfilling

C. Reference to Standards

1. American Safety for Testing and Materials (ASTM):
2. ASTM A-328 Standard Specification for Sheet Piling.
3. Occupational Safety and Health Administration (OSHA): Contractor shall note the OSHA requirements for excavations, particularly requirements set forth in Federal Register, Tuesday, October 31, 1989, 29 CFR Part 1926. Compliance with this publication and any other OSHA excavation requirements is the Contractor's responsibility only.

D. PERFORMANCE REQUIREMENTS

1. Design, provide, monitor, and maintain an anchored and braced excavation support and protection system capable of resisting soil and hydrostatic pressure and supporting sidewalls of excavations.
   a. Work includes removing excavation support and protection systems when no longer needed.
   b. Prevent surface water from entering excavations by grading, dikes, or other means.
   c. Install excavation support and protection systems without damaging existing buildings, pavements, and other facilities adjacent to excavation.

d. Work includes designing and implementing a dewatering system as required by Section 31 23 19 – Dewatering.

1.03 DEFINITIONS

A. Excavation Support System is defined as methods of stabilizing the excavation slopes for the construction of the various facilities.

1.04 SUBMITTALS

A. Submit under the requirements of General Requirements, Section 01 33 00 – Submittal Procedures.

B. Shop Drawings: Prepare and furnish shop drawings to the Engineer for review within sixty (60) calendar days after receipt of the Notice to Proceed or 30 days minimum prior to installation. The Contractor shall be responsible for the correctness and accuracy of the shop drawings. Shop drawings shall include but not be limited to the following items:

1. A general layout plan showing location of each temporary excavation support system, top and bottom of support system and location of existing and new nearby utilities and structures.
2. The dewatering system and temporary excavation support system shall be designed to work in concert.
3. Drawings and calculations shall show the proposed design, method of excavation support and other details left open to choice. The Designer of Record shall furnish with the drawings and computations, detailed specifications or special conditions associated with the design.
4. If required, the temporary excavation support system shall consist of engineered structural components consisting of standard sheet pile sections, structural steel sections, structural timber members, reinforced concrete sections or a combination of the above.
5. Provide details of any standard fabricated sections that are to be used.
6. Bracing scheme (if any) and associated details, including member sizes, locations, spacing, placement and removal sequences.
7. The Designer of Record must review any shop drawing submittals associated with the design and provide written evidence of satisfactory review prior to submitting such drawings to the Owner for review.
8. Provisions for removal of the temporary excavation support system shall be given.

C. The Engineer’s review and comment on the as-submitted support system shall not be interpreted as the Owner or Engineer accepting responsibility for the performance of the Excavation Support System and shall not relieve the Contractor of full responsibility for the proper design, installation, maintenance operation and actual performance of both the individual system components and the entire system.

D. Review of the excavation support system will be done in conjunction with the dewatering system specified in Section 31 23 19 - Dewatering. The dewatering system and excavation support system shall be designed to work in concert.

E. Product Data:

1. If the system consists of sheet piling, submit sheet piling data including, but not limited to, physical properties including grade of steel, nominal width of piling sections, weight of piling sections, and section moduli of standard wall sections and rolled corner sections.
2. If system consists of structural steel or timber members, submit structural data, including but not limited to physical properties, weight of members, section moduli, cross sectional areas, allowable stresses, etc.

1.05 QUALIFICATIONS

A. The design of the Excavation Support System, supervision of the installation and supervision of the construction operations associated with excavations shall be made by qualified individual(s) in this type of work.

B. Design for temporary excavation support system shall be performed by or under the direction of a Licensed Structural Engineer, registered in the State of Missouri (Designer of Record). The design drawings and associated calculations for the temporary excavation support system shall bear the seal of the Licensed Structural Engineer, registered in the State of Missouri. THERE SHALL BE NO EXCEPTIONS TO THIS REQUIREMENT. Submittals with drawings and computations without the Missouri Structural Engineer seal, signature and date shall be immediately rejected without any review. The seal of a non-Missouri licensed engineer practicing structural engineering shall not be regarded as a substitute for the seal of a Missouri Structural Engineer. THERE SHALL BE NO EXCEPTIONS TO THIS REQUIREMENT.

1.06 QUALITY ASSURANCE

A. If, during the progress of the work, the installed Excavation Support System proves inadequate to meet the requirements specified, the Contractor shall at his expense furnish and install additional components as may be necessary to perform the required support of the Excavation in a satisfactory manner. Such changes and additions shall be submitted in writing to the Engineer prior to being made.

1.07 MAINTENANCE SERVICE

A. Any and all damage to existing or proposed structures, facilities, or roadways due to construction activity and/or unsatisfactory performance of the Excavation Support System shall be the responsibility of the Contractor and he shall repair any and all such damages in a manner acceptable to the Owner or Engineer and at no additional cost to the Owner.

1.08 PROJECT CONDITIONS

A. Existing Utilities: Do not interrupt utilities serving facilities occupied by the Owner or others unless permitted in writing by the Engineer and then only after arranging to provide temporary utility services according to requirements indicated.

B. Project Site Information: A geotechnical report has been prepared for this Project and is available for information only. The report is not part of the Contract Documents. The opinions expressed in this report are those of the geotechnical

engineer and represent interpretations of the subsoil conditions, tests, and results of analyses conducted by the geotechnical engineer. Owner will not be responsible for interpretations or conclusions drawn from this data by the Contractor.

1. The Contractor shall make additional test borings and conduct other exploratory operations as necessary.
2. The geotechnical report is referenced elsewhere in the Contract Documents.

C. The Contractor shall survey adjacent structures and improvements (see Section 01 72 50 – Field Engineering); establish exact elevations at fixed points to act as benchmarks. Clearly identify benchmarks and record existing elevations.

1. The Contractor shall, during installation of excavation support and protection systems, regularly resurvey benchmarks, maintaining an accurate log of surveyed elevations for comparison with original elevations. Promptly notify Engineer if changes in elevations occur or if cracks, sags, or other damage is evident in adjacent construction.

PART 2 PRODUCTS

2.01 GENERAL

A. Materials need not be new but must be in serviceable condition.

B. Structural Steel: ASTM A 36 (ASTM A 36M).

C. Steel Sheet Piling: ASTM A 328 (ASTM A 328M) or ASTM A 572 (ASTM A 572M).

D. Wood Lagging: Lumber, mixed hardwood, nominal rough thickness of 3 inches (75 mm).

2.02 MATERIALS AND COMPONENTS

A. Steel sheet piling shall conform to ASTM A328. Steel sheet piling shall have standard interlocking sections, including standard corner sections. Piling can be new or used. Used material shall be straight and uniform and shall be capable of being driven straight and providing proper interlock.

B. Structural Steel Plates, Shapes and Bars: ASTM A36.

C. Structural Steel Tubing: Hot-formed, welded or seamless, ASTM A500, Grade B, 46 ksi.

D. Steel Pipe: ASTM A53; type as selected; Grade A; black finish unless galvanizing is required; standard weight (Schedule 40), unless otherwise shown or specified.

2.03 FASTENERS

A. Bolts and Nuts: Regular hexagon head type, ASTM A307, Grade A or ASTM 325 bolts. Provide washers and shims as required.

B. Lag Bolts: Square head type, Federal Specification FF-B-561.

C. Machine Screws: Cadmium plated steel, Federal Specification FF-S-92.

D. Wood Screws: Flat head carbon steel, Federal Specification FF-S-111.

E. Plain Washers: Round, carbon steel, Federal Specification FF-W-92.

F. Lock Washers: Helical spring type carbon steel, Federal Specification FF-W-84.

PART 3 EXECUTION

3.01 PREPARATION

A. Contractor shall protect structures, utilities, sidewalks, pavements, and other facilities from damage caused by settlement, lateral movement, undermining, washout, and other hazards that could develop during excavation support and protection system operations.

1. Shore, support, and protect utilities encountered.

B. Install excavation support and protection systems to ensure minimum interference with roads, streets, walks, and other adjacent occupied and used facilities.

1. Do not close or obstruct streets, walks, or other adjacent occupied or used facilities without permission from Owner and authorities having jurisdiction. Provide alternate routes around closed or obstructed traffic ways if required by governing regulations.

C. Locate excavation support and protection systems clear of permanent construction and to permit forming and finishing of concrete surfaces.

D. Monitor excavation support and protection systems daily during excavation progress and for as long as excavation remains open. Promptly correct bulges, breakage, or other evidence of movement to ensure excavation support and protection systems remain stable.

E. Promptly repair damages to adjacent facilities caused by installing excavation support and protection systems.

3.02 EXAMINATION

A. The products for use in establishing the excavation support system shall be examined by the Engineer for visible defects. The Engineer may reject products from being used as part of the excavation support system based upon his examination.

3.03 INSTALLATION – EXCAVATION SUPPORT SYSTEM

A. The Contractor shall design, furnish, install and maintain such facilities necessary to accomplish the following:

1. Protect excavation walls and/or side slope as well as existing and new construction adjacent to or within the excavation limits.

B. Damage Restitution: The Contractor shall be responsible for and shall repair without any cost to the Owner, any damages to work in place, Subcontractor's equipment, existing structures, temporary berms, existing roadways, and the

excavation, including damage to the bottom of excavation including removal of material and pumping out of the excavated area, that may result from his negligence, inadequate or improper design, installation or maintenance of the Excavation Support System.

C. Upon completion of the work required to be protected by the Excavation Support System, the Contractor shall remove all excavation support system components. Removal of these components shall begin after receipt of written consent of the Engineer.

3.04 SOLDIER BEAMS AND LAGGING

A. Install steel soldier piles before starting excavation. Space soldier piles at intervals indicated. Accurately align exposed faces of flanges to vary not more than 2 inches (50 mm) from a horizontal line and not more than 1:120 out of vertical alignment.

B. Install wood lagging within flanges of soldier piles as excavation proceeds. Trim excavation as required to install lagging. Fill voids behind lagging with soil, and compact.

C. Install wales horizontally at centers indicated and secure to soldier piles.

3.05 SHEET PILING

A. If required, install one-piece sheet piling and tightly interlock to form a continuous barrier. Accurately align exposed faces of sheet piling to vary not more than 2 inches (50 mm) from a horizontal line and not more than 1:120 out of vertical alignment. Cut tops of sheet piling to uniform elevation at top of excavation.

3.06 PILE DRIVING

A. The Contractor shall drive the piling with a steam, air or diesel hammer that meets the approval of the Engineer.

B. Pile driving procedures shall be established by the Contractor to prevent overheating of the interlocks to the point of melting and bonding if a vibratory hammer is used.

C. Piles driven out of interlock with adjacent piles, or otherwise damaged, shall be removed and replaced with a pile that meets the specifications at the Contractor's expense.

3.07 TIEBACKS

A. Tiebacks: Drill for, install, tension, and grout tiebacks into position. Test load-carrying capacity of each tieback and replace and retest deficient tiebacks.

3.08 BRACING

A. Bracing: Locate bracing to clear columns, floor framing construction, and other permanent work. If necessary to move a brace, install new bracing before removing original brace.

1. Do not place bracing where it will be cast into or included in permanent concrete work, unless otherwise approved by Engineer.

2. Install internal bracing, if required, to prevent spreading or distortion of braced frames.
3. Maintain bracing until structural elements are supported by other bracing or until permanent construction is able to withstand lateral earth and hydrostatic pressures.

3.09 REMOVAL AND REPAIRS

A. Remove excavation support and protection systems when construction has progressed sufficiently to support excavation and bear soil and hydrostatic pressures. Remove in stages to avoid disturbing underlying soils and damaging structures, pavements, facilities, and utilities.
   1. Remove excavation support and protection systems to a minimum depth of 48 inches below overlying construction and abandon remainder.
   2. Repair or replace, as approved by Engineer, adjacent work damaged or displaced by removing excavation support and protection systems.

B. Leave excavation support and protection systems permanently in place 48" below grade.

END OF SECTION 31 41 00

CITY OF GRAIN VALLEY

WATER TOWER UPGRADE

DIVISION 32 – EXTERIOR IMPROVEMENTS

TABLE OF CONTENTS

SECTION NUMBER	SECTION TITLE	PAGE NUMBER
32 12 16	Asphalt Paving	32 12 16 1-4
32 15 40	Aggregate Surface	32 15 40 1-3
32 31 00	Fences and Gates	32 31 00 1-3
32 90 00	Planting	32 90 00 1-8

PART 1 GENERAL

1.01 RELATED DOCUMENTS

A. Drawings and general provisions of the Contract, including General and Supplementary Conditions and Division 01 Specification Sections, apply to this Section.

1.02 SUMMARY

A. Cleaning and priming aggregate base courses for bituminous concrete binder course.

B. Bituminous concrete binder and surface course paving at the locations indicated on drawings.

C. Quality Control / Quality Assurance sampling and testing.

D. Related Sections
   1. Section 01 33 00 – Submittal Procedures
   2. Section 31 23 00 – Excavation and Fill
   3. Section 31 25 00 – Erosion and Sedimentation Control
   4. Section 31 32 00 – Soil Stabilization

E. Regulatory Requirements
   1. Conform to the current and applicable portions of Grain Valley Standard Detail Drawings STR-004.

1.03 SUBMITTALS

A. Submit Grain Valley approved mix designs of each class of mix and Grain Valley approved material sources for review at least four weeks prior to beginning of work.

1.04 QUALITY ASSURANCE

A. Mix designs shall be for bituminous concrete mixes approved and used by Grain Valley within the last year.

B. Mixing Plant: Conform to Grain Valley prequalification requirements for producing Grain Valley specified mix designs.

C. Obtain materials from same source throughout paving operations.

1.05 JOB CONDITIONS

A. Provide access to job for all contractors and subcontractors by using drives to fullest extent possible and, when specified, by constructing temporary roadways on portions of base course.

B. Delay bituminous paving until after primary construction work is complete; unless concrete trucks, material delivery trucks, and other heavy construction vehicles can be detoured around roadway.

1.06 ENVIRONMENTAL REQUIREMENTS

A. Do not place bituminous mixtures when ambient air or base temperature is less than 40 degrees F or surface is wet or frozen.

PART 2 PRODUCTS

2.01 BITUMINOUS CONCRETE BINDER AND SURFACE COURSE

A. Materials: Conform to the Grain Valley Standard Detail Drawings. Mixes shall conform to the following:

1. Bituminous Concrete Binder Course:
   a. PG 64-22
   b. Design Air Voids – 4.0% @ Ndesign = 70
   c. Mixture Composition (Gradation Mixture) – IL-19.0
2. Bituminous Concrete Surface Course:
   a. PG 64-22
   b. Design Air Voids - 4.0% @ Ndesign = 70
   c. Mixture Composition (Gradation Mixture) – Mix C

B. RAP Materials: Conform to the Grain Valley Standard Detail Drawings and section 2205.3 of the latest version of APWA Standard Specifications as modified herein. Fractionated Reclaimed Asphalt Pavement (FRAP) may be used as an aggregate source. Maximum combined FRAP is 30% of the total mix by weight. Recycled Asphalt Shingles (RAS) are **not allowed**.

C. Prime Coat: Medium curing cut-back asphalt or asphalt emulsion penetrating prime coat consisting of either MC-30 or PEP.

D. Tack Coat: Emulsified asphalt: SS-1, SS-1h, CSS-1, or CSS-1h, may be diluted with up to 1 part water to 1 part asphalt.

PART 3 EXECUTION

3.01 INSPECTION

A. Inspect areas and conditions where bituminous concrete paving is to be installed.

1. Proof roll subgrade with loaded tandem vehicle to verify that subgrade is dry and compacted and ready to support paving operations.
2. Notify Engineer of conditions detrimental to proper and timely completion of work.
3. Request resolution of conditions.

B. Protection:
1. Provide protection for all adjacent work and areas.

3.02 PREPARATION – BITUMINOUS PRIME MATERIAL

A. Apply bituminous prime coat to aggregate base course in accordance with Grain Valley Standard Detail Drawings.

B. Use clean sand to blot excess primer.

3.03 FRAME ADJUSTMENTS

A. Set frames for manholes and other units, within areas to be paved, to final grade as part of this work.
1. Include existing frames or new frames furnished in other sections of these specifications.

B. Surround frames set to grade with ring of compacted bituminous base prior to paving.
1. Place bituminous mixture up to 1 inch below top of frame, slope to grade and compact with hand tamp.

C. Adjust frames to proper grade for paving.
1. Provide temporary closures over openings until completion of rolling operations.
2. Remove closures at completion of work.
3. Set cover frames to grade, flush with surface of adjacent pavement.

3.04 BITUMINOUS CONCRETE BINDER AND SURFACE COURSE

A. Construct in accordance with Grain Valley Standard Detail Drawings..
1. Apply bituminous Tack Coat to the binder course prior to placement of the surface course
2. Apply bituminous prime to contact surfaces of curbs, gutters and pavement edges.
3. Work includes complete construction of courses on prepared base course indicated on drawings, profiles and typical sections for proposed paved parking areas.

3.05 CONSTRUCTION TESTING

A. Contractor shall complete all Quality Control / Quality Assurance testing in accordance with Grain Valley Standard Detail Drawings..

B. Contractor shall provide and pay for an independent testing company to complete the Quality Assurance tests outlined to be completed in Grain Valley Standard Detail Drawings..

END OF SECTION 32 12 16

PART 1 GENERAL

1.01 SECTION INCLUDES

A. Construction of new access drive consisting of aggregate surface and base course at locations shown on the plans.

B. Earthwork necessary to prepare the subbase for all proposed roadways.

1.02 RELATED SECTIONS

A. Section 31 23 00 – Excavation and Fill.

1.03 REFERENCE TO STANDARDS

A. Missouri Department of Transportation (MODOT) Standard Specifications for Road and Bridge Construction in Missouri, latest edition and applicable sections of the Supplemental Specifications and Recurring Special Provisions, latest edition, hereinafter referred to as the MODOT Standard Specifications.

1.04 SUBMITTALS

A. Submit material certification under the provisions of Special Conditions - Section 01 33 00 Submittal Procedures.

B. Shop Drawings: (Reserved)

C. Product Data: Contractor shall submit letter of certification that material meets MODOT specifications for the material specified.

D. Samples: Submit source and laboratory tests of all aggregate materials for laboratory testing.

1.05 QUALIFICATIONS

A. The roadway work shall be performed by a Contractor who can produce a list of not less than five (5) projects on which he has worked with the specified materials, and one who can demonstrate that he will utilize the proper equipment necessary for the completion of the work within the specified requirements.

PART 2 PRODUCTS

2.01 AGGREGATE MATERIALS

A. Aggregate Base Course

Material for Type 1, 5 and 7 aggregate bases shall be crushed stone or reclaimed asphalt or concrete which meet the requirements of Sec 1007 per section 304.2 of the MODOT Standard Specifications.

B. Aggregate Surface Course

Aggregate for surfacing shall be composed durable particles of rock or reclaimed concrete per section 1006.2 of the MODOT Standard Specifications conforming to Section 300 of the MODOT Standard Specifications.

PART 3 EXECUTION

3.01 EXAMINATION

A. Inspection of surface course shall not commence until all construction activities are completed as directed by the Engineer.

3.02 PREPARATION

A. Prepare subgrade to a condition which is satisfactory to the Engineer prior to roadway work in accordance with Section 304 of the MODOT Standard Specifications.

B. The Contractor shall clear and remove the top 4” layer of turf and topsoil in the areas of the proposed aggregate surface.

3.03 SURFACE CONSTRUCTION

A. Aggregate Base Course

Construction in accordance with Section 304 of MODOT Standard Specifications. Thickness shall be 6" after compaction. Work includes complete construction of base course as specified. Aggregate base course shall be compacted to 98 percent Standard Proctor.

B. Aggregate Surface Course

Construct in accordance with Section 310 of IDOT Standard Specifications. Work follows preparation of the subgrade in accordance with Section310 of the MODOT Standard Specifications.

3.04 FIELD QUALITY CONTROL

A. The Contractor shall notify the Engineer 48 hours prior to commencement of surface construction to allow the Engineer to inspect the subgrade prior to placement of the aggregate base course. The Engineer may require the subgrade to be modified in

accordance with Section 304; or compacted to prepare for backfilling.

B. The Contractor shall monitor the in-place density of the surface materials to ensure adequate compaction occurs and provide documentation of density testing.

3.05 PROTECTION

A. The Contractor shall restore existing roadways, which are damaged during the construction activities, at no expense to the Owner, such that no evidence of construction activities is apparent.

END OF SECTION 32 15 40

DIVISION 32 – EXTERIOR IMPROVEMENTS
Section 32 31 00 - Fence and Gates

PART 1 GENERAL

1.01 RELATED DOCUMENTS

A. Drawings and general provisions of the Contract, including General and Supplementary Conditions and Division 01 Specification Sections, apply to this Section.

1.02 SUMMARY

A. The work covered by this section consists of furnishing all labor, materials, accessories, tools, equipment, transportation, services, and performing all operations required to construct the chain link fence in strict accordance with this specification and the plans.

B. Related Sections
   1. Section 32 31 00 – Excavation and Fill
   2. Section 03 31 00 – Structural Concrete

C. Reference to Standards
   1. ASTM F567 – Standard Practice for Installation of Chain-Link Fence

1.03 SUBMITTALS

A. Before commencing work, submit complete shop drawings and illustrations for work in this section for Engineer’s review.

B. Include a complete bill of materials and have all materials designated on the shop drawings.

1.04 QUALITY ASSURANCE

A. The fence materials will be by a manufacturer regularly engaged in the business of supplying fence and fence accessories.

PART 2 PRODUCTS

2.01 CHAIN LINK FABRIC

A. Chain link fabric shall be 2-inch mesh woven from No. 9 gauge aluminum-coated steel conforming to ASTM A491 Type I of not less than 0.40 oz. per square foot of uncoated wire surface. The fabric shall have a height as specified on plan. The top of the fabric shall have a knuckle selvage and the bottom shall have a twisted (barbed) selvage. A supplier's certification shall be furnished certifying that the

fabric was produced and tested in accordance with the applicable ASTM specification and has been found to meet these specifications.

B. The chain link wire fabric shall be securely fastened to all terminal posts by 1/4" x 3/4" tension bars with heavy 11-gauge pressed steel bands spaced approximately 14 inches apart, to line post with 6-gauge wire clips at 14-inch spacing and to the top rail with 9-gauge tie wires at 24 inches.

2.02 BOTTOM TENSION WIRE

A. The bottom tension wire shall be aluminum-coated steel conforming to ASTM A824, Type I. The tension wire shall be stretched tight with galvanized turnbuckles spaced at intervals of not more than 1,000 feet.

2.03 FENCE FRAMEWORK

A. Metal framework and posts (top rail, horizontal braces, line, corner, end, pull and gate posts) shall be per ASTM F1083 and be the shapes, dimensions and weight shown on the plans.

2.04 FENCE FITTINGS

A. Fence fittings, tension and brace bands and bars, tie wires and clips, post caps, and barbed-wire arms, fasteners shall conform to ASTM F626.

2.05 BARBED WIRE

A. Steel barbed wire shall be two-strand barbed wire per ASTM A121 with four-point round barbs spaced at not more than 5 inches. Barbed wire shall have aluminum coating Type A or zinc coating Type Z, Class 3.

PART 3 EXECUTION

3.01 FENCE INSTALLATION

A. Fence installation shall conform to ASTM F567 - Installation of Chain Link Fence, except that terminal post bracing shall be required for all installations. Fence and gate installations shall meet all f the applicable requirements of the standard details shown in the plans or as directed by the Engineer.

B. All posts for the fence installation shall be set in concrete at the required dimension and depth and at the spacing shown on the plans. All concrete shall be thoroughly consolidated around the posts by tamping or vibrating and shall have a smooth finish slightly higher than the ground and sloped to drain away from the posts. All posts shall be set plumb and to the required grade and alignment. No materials shall be installed on the posts, nor shall the posts be disturbed in any manner within 7 days after the individual post footing is completed. If encountered, in lieu of drilling through rock, the rock may be excavated to the required footing depth. No extra compensation shall be made for rock excavation.

C. The top rail shall be continuous and shall pass through the post tops. The coupling used to join the top rail lengths shall allow for expansion.

D. Horizontal brace rails, with diagonal truss rods and turnbuckles, shall be installed at all terminal posts.

E. The wire fabric shall be firmly attached to the posts and braced in the manner shown on the plans. All wire shall be stretched taut and shall be installed to the required elevations. The fence shall generally follow the contour of the ground, with the bottom of the fence fabric no less than 1 inch (25 mm) or more than 4 inches (100 mm) from the ground surface. Grading shall be performed where necessary to provide a neat appearance.

F. At locations of small natural swales or drainage ditches and where it is not practical to have the fence conform to the general contour of the ground surface, longer posts may be used and multiple strands of barbed wire stretched thereon to span the opening below the fence. The vertical clearance between strands of barbed wire shall be 6 inches (150 mm) or less.

G. The gate and installation shall conform to ASTM F 1184 standards for aluminum cantilever slide gates, Type II, Class 2.

3.02 CONTRACTOR'S RESPONSIBILITY FOR UTILITY LOCATING

A. It shall be the Contractor's responsibility to determine the actual location of all utilities, including service connections to underground utilities. Prior to construction, the Contractor shall contact JULIE. Prior to construction, the Contractor shall notify all utility companies of his operational plans. The Contractor shall make arrangements for detailed information and assistance in locating utilities. In the event an unexpected utility interference is encountered during construction, the Contractor shall immediately notify the utility company, the Owner and the Engineer. Any such mains and/or services disturbed by the Contractor's operations shall be restored immediately at his expense to the satisfaction of the Owner and the Engineer.

END OF SECTION 32 31 00

DIVISION 32 – EXTERIOR IMPROVEMENTS
Section 32 90 00 - Planting

PART 1 GENERAL

1.01 RELATED DOCUMENTS

A. Drawings and general provisions of the Contract, including General and Supplementary Conditions and Division 01 Specification Sections, apply to this Section.

1.02 SUMMARY

A. This section includes all material, labor and equipment for placement of topsoil on areas to receive seeding; the section also includes seedbed preparation, fertilizing, seeding, mulching, watering and mowing,

B. Related Sections
   1. Section 01 33 00 – Submittal Procedures
   2. Section 31 23 00 – Excavation and Fill
   3. Section 31 25 00 – Erosion Control

C. Reference to Standards
   1. AASHTO T88
   2. AASHTO T194
   3. The pH shall be determined on that portion of the sample passing the No. 10 sieve in accordance with the ASTM Standard D-4972.

1.03 SUBMITTALS

A. Samples: Representative samples of off-site material proposed for use as topsoil - including test results on clay, sand, organic contents and pH shall be submitted to the Engineer for review and/or testing prior to placement of the material.

B. The following items shall be submitted and approved prior to operations:
   1. Schedule of seeding
   2. Source of seed
   3. Proposed seed mixes
   4. Fertilizer mixes and application rates
   5. Herbicides concentrations and application rates

C. The following items shall be submitted during operations:
   1. Tags from seed bags certifying source, composition and quantity.
   2. Tags from fertilizer bags certifying composition.
   3. Load tickets from straw mulch and/or hydro-mulch deliveries.

1.04 PROTECTION

A. Contractor is responsible to protect and avoid all existing underground utilities during construction operations. Repair of any utilities damaged by installation shall be the responsibility of the Contractor.

B. Contractor is responsible to protect all existing conditions including buildings, fences, pavements, trees, and other plant material from damage during project installation and maintenance. Any damages occurring shall be the responsibility of the Contractor to replace, repair or compensate Owner for damages.

1.05 DELIVERY AND STORAGE

A. Grass seed shall be delivered either individually or in premixed sacks, each bearing a tag with the following information clearly printed: date and location of packaging, seed mix, percentage of pure live seed, year of production and weight.

B. Fertilizer may be delivered separately or premixed in sacks in which case each sack shall bear a tag with the following information clearly printed: name and address of manufacturer, brand, weight, chemical composition and guarantee of analysis.

C. If the fertilizer, seed or mulch is stored on the site, it shall be raised above the ground and thoroughly covered with polyethylene to minimize moisture absorption.

D. Seed which has become wet, moldy, musty or otherwise damaged during storage will not be acceptable and will be replaced at the Contractor's expense.

1.06 WARRANTY

A. Contractor shall warranty turf for one complete growing season following the initial establishment. If seed does not germinate and develop into healthy turf, Contractor shall reseed following these seeding specifications, overseed or otherwise provide remedial work necessary for successful turf development as directed by the Owner's Representative.

B. Contractor shall warranty the native plant mixes for one complete growing season following initial establishment. At the end of the first growing season forty (40) percent of the different species in the mixes shall be identified/present in the seeded areas. The native seed mixes shall not be dominated by non-native plant species. There shall be no areas larger than 100 square feet that do not have the seeded species present.

PART 2 PRODUCTS

2.01 TOPSOIL MATERIALS

A. Topsoil shall be defined as follows:

1. Topsoil shall be free from large roots, sticks, weeds, brush or stones larger than 1 inch in diameter or other litter and waste products. It shall be a loamy

mixture having at least 90 percent passing the No. 10 sieve. It shall be free from extraneous materials, shall comply with the following requirements:

2. Topsoil shall contain not less than 1 percent nor more than 10 percent organic matter as determined by the test for organic matter in accordance with AASHTO T 194.
3. Topsoil shall contain not less than 12 percent nor more than 50 percent clay as determined in accordance with AASHTO T 88.
4. The sand content shall not exceed 55 percent as determined in accordance with AASHTO T 88.
5. The pH of the sample shall not be lower than 5.0 nor higher than 8.0. The pH shall be determined with an acceptable pH meter, or that portion of the sample passing the No. 10 Sieve, in accordance with the ASTM Standard D-4972.
6. Topsoil shall be capable of sustaining vigorous plant growth.

2.02 SEEDING MATERIALS

A. Starter Fertilizer nutrients shall be commercial nitrogen, phosphorus and potassium mixed in a 1:1:1 ratio of active ingredients and applied at a rate which will yield the number of actual nutrient pounds per acre as required.

B. Maintenance Fertilizer nutrients shall be commercial slow-release nitrogen, phosphorus and potassium mixed in a 2:1:1 ratio of active ingredients and applied at a rate which will yield the number of actual nutrient pounds per acre as required.

C. Seed Mixes shall be those shown on plans. Contractor may propose alternate varieties with equal or better qualities. Substitutions will be allowed only at the discretion of the Owner’s Representative.

D. Straw shall be fresh clean straw free from weed seeds and foreign material.

E. Hydro-mulch shall be cellulose manufactured specifically for said purpose. Mulch shall be free from foreign material and sized appropriately to be applied at specified rates.

F. Water for hydro-mulch shall be clean water, free from chemicals and materials which would adversely affect germination and growth of seeds.

G. Seed Mixes

1. Type "A" Seed: This seeding mixture will normally be used when seeding is required in areas of established yards, shoulders, slopes in street right-of-way and any other area where a high-type seeding is deemed necessary. The seed shall be sowed at a rate of 10 lbs. PLS per 1000 square feet (436 lbs. PLS per acre). The seed mixture will be 100 percent Turf-Type Tall Fescue composed of an equal mix of three of four compatible species. The mixture shall not include any varieties of the slower growing Turf-Type Tall Fescue "Dwarf". The species shall be one of the following or as approved by the City/Design Professional:

Apache	Arid	Austin
Bonanza	Carefree	Chieftan
Cimmaron	Cochise	Falcon
Guardian	Houndog	Jaguar II
Maverick II	Mustang	Olympic
Phoenix	Rebel II	Rebel 3D
Safari	Shenandoah	Thoroughbred
Titan	Tribute	Vegas

2. The seed mixture shall also include 100 percent Annual Rye grass to provide a temporary grass stand. The seed shall be sowed at a rate of 10 lbs. PLS per 1000 square feet (436 lbs. per acre) of the Turf-Type Tall Fescue and 2 lbs. PLS per 1000 square fect (87 lbs. per acre) of the Annual Rye.

2.03 EROSION CONTROL BLANKET

A. Erosion Control Blanket for general seeded areas shall be North American Green ERONET S75 Short-Term Photodegradable Straw Blanket or approved equal.

B. Erosion Control Blanket for slope installations (4:1 slopes or steeper) shall be North American Green ERONET S150 Short-term Photodegradable Double-Net Straw Blanket or approved equal.

C. Erosion Control Blanket for channel installations shall be North American Green ERONET C125 Long-Term Photodegradable Double-Net Coconut Blanket or approved equal.

2.04 CONDITION OF SITE

A. Site shall have a minimum 4” of topsoil placed over all areas to be seeded with permanent seed mix.

B. Topsoil shall be finish graded to the lines and grades shown on plans or approved by the Owner’s Representative and all areas shall drain.

C. Areas with existing vegetation shall be mown to a height of no greater than three (3) inches. The mowed vegetation shall be cut and removed or mulched and dispersed. Any remaining cut material shall not be at a thickness that will result in the death of the vegetation underneath it or inhibition of growth of seeds planted.

PART 3 EXECUTION

3.01 STRIPPING

A. Stripping of any remaining or new vegetation and topsoil is required. Topsoil shall be removed from all building and pavement areas a minimum of 5 feet, in all directions, beyond the limits of construction. Any area used as a source of fill should also be stripped of topsoil. Stripping depth shall be a minimum of 6". Additional stripping depth may be required to adequately remove vegetation and heavily

organic soils. The Contractor shall stockpile topsoil to be used when the site construction is complete. Contractor shall indicate to the Engineer the areas of topsoil stockpile(s) for approval prior to commencing work.

3.02 PREPARATION

A. All foreign materials, plants, roots, stones, sticks and debris shall be removed. Foreign material shall not be buried.

B. Under this item, grading will be necessary only at those areas where placement of topsoil will inhibit drainage. At those areas, sufficient material shall be removed to allow topsoil placement without inhibiting the drainage. Placement of the topsoil shall not begin until the Engineer approves the lines, grades and condition of the subgrade.

3.03 TOPSOIL PLACEMENT

A. Spread topsoil to depth of four (4) inches over areas to be seeded or where directed by the Engineer. Place during dry weather and on dry, unfrozen subgrade.

B. Topsoil shall be graded to the contours and spot elevations as shown on the Plans. Grades should be adjusted to ensure positive drainage away from buildings and other structures.

C. The finished surface shall be free of clods, rocks and shall conform to the lines and grades shown on the plans.

D. Topsoil intended for placement shall not be in a frozen or muddy condition, as determined by the Engineer.

3.04 TEMPORARY SEEDING

A. Time of Operations

1. Contractor shall commence operations only after giving a minimum 24 hours notice to the Owner’s Representative.

B. Seeding

1. Seeding shall be done into freshly prepared seed bed. If the seed bed has been compacted, crusted-over or otherwise affected, seedbed shall be prepared again prior to seeding.
2. Seed mixes shall be drilled, broadcasted, or hydraulically applied.

C. Mulch

1. Contractor may use either hydro mulch or straw over temporary seeded areas where topsoil is exposed with no existing vegetation present.

a. Hydromulching shall entail:
   i. Area shall be hydro-mulched at the rate of 750 pounds of cellulose mulch per acre. Mulch shall be mixed with water and applied at the rate of 1000 gallons per acre.
   ii. Seed may be mixed with the hydro-mulch at the Contractor's option.
   iii. Buildings, streets, sidewalks and other surfaces shall be protected during hydromulching operations. Any hydromulch blown beyond the seeded area shall be thoroughly cleaned-up.

b. Straw mulching shall entail:
   i. Area shall be uniformly covered with straw at the rate of 1-1/2 tons per acre.
   ii. Straw shall be punched into the soil with an uncambered dull disk approximately 20 inches in diameter set at 3-inch intervals. Stabilizer weights shall provide for straw to be pushed into the ground at least 2 inches.
   iii. In areas inaccessible to mechanical punching, water shall be applied to the spread straw at a rate and duration to bind the straw.
   iv. Straw blown beyond the seeded areas shall be raked and removed from the site.

3.05 PERMANENT SEEDING

A. Time of Operations
   1. Contractor shall commence operations only after giving a minimum 24 hours notice to Owner's Representative.
   2. Seedbed preparation and seeding shall be done only when soil is relatively dry to avoid clodding and compaction of soil.
   3. Seeding Dates: Spring seeding shall be from April 1 through June 15 and August 1 to November 1.

B. Seedbed Preparation
   1. All areas designated for seeding shall be tilled to a minimum depth of 4 inches and rolled.
   2. Surface shall be free of all construction debris, rocks, roots, vegetative debris and litter.
   3. Soils particles shall be no larger than one inch in dimension.
   4. Owner's Representative will approve seed bed prior to seeding. Seed beds will not be approved where weeds or vegetative growth remains.

C. Pre-seed Fertilizing
   1. Within 24 hours of seedbed preparation, area shall be fertilized with 270 lb. of actual nutrient per acre using a fertilizer mix of 1-1-1.

D. Seeding
   1. Seeding shall be done into freshly prepared seed bed. If the seed bed has been compacted, crusted-over or otherwise affected, seedbed shall be prepared again prior to seeding.

2. Turf seed mixes shall be drilled into the surface of the soil in two passes at right angles to each other. Seed shall be 1/2 inch below the surface or as recommended for specific seed mix.

E. Mulch

1. Contractor may use either hydro mulch or straw over seeded areas where topsoil is exposed with no existing vegetation present.
   a. Hydromulching shall entail:
      i. Area shall be hydro-mulched at the rate of 750 pounds of cellulose mulch per acre. Mulch shall be mixed with water and applied at the rate of 1000 gallons per acre.
      ii. Seed shall not be mixed with the hydro-mulch for permanent seeding applications.
      iii. iii. Building, streets, sidewalks and other surfaces shall be protected during hydromulching operations. Any hydromulch blown beyond the seeded area shall be thoroughly cleaned-up.
   b. Straw mulching shall entail:
      i. Area shall be uniformly covered with straw at the rate of 1-1/2 tons per acre.
      ii. Straw shall be punched into the soil with an uncambered dull disk approximately 20 inches in diameter set at 3-inch intervals. Stabilizer weights shall provide for straw to be pushed into the ground at least 2 inches.
      iii. In areas inaccessible to mechanical punching, water shall be applied to the spread straw at a rate and duration to bind the straw.
      iv. Straw blown beyond the seeded areas shall be raked and removed from the site.
   c. Erosion Control Blanket:
      i. Blanket is required on all slopes 4:1 (H:V) or steeper.
      ii. Blanket should be overlapped and stapled as shown on the plans and as per the manufacturer's recommendations
      iii. Blanket shall be trenched-in along the top of the slope as shown on the plans.

F. Post-seeding Fertilizing

1. Thirty (30) days following the first mowing, the area shall be re-fertilized at the rate of 200 lbs. per acre of actual nutrient using a fertilizer mix of 2-1-1.

3.06 ESTABLISHMENT – ALL SEEDED AREAS

A. Contractor shall maintain all seeded areas until acceptance of project or successful establishment of turf, whichever is longer. In no case will the period of maintenance be less than 3 months.

B. During the establishment period, Contractor shall provide the following:

1. Watering:

a. Contractor is not required to water seeded areas but may elect to do so to optimize germination and successful establishment of turf. Seeded areas generally shall be watered to achieve a rate of 5 gallons per square yard every 2 days until established. Rainfall may relieve the need for watering at certain times.
b. Watering shall be done in a manner to achieve infiltration of water and avoid run-off and soil erosion.
c. Contractor shall supply hoses, portable sprinkling devices and other needed equipment to provide supplemental watering when needed.

2. Mowing:
a. Contractor shall mow the developing turf when it reaches a height of 8 inches Growth shall be cut to a height of 4 inches. (If Contractor delays result in excess growth prior to mowing, Contractor may be required to rake and remove cuttings from the site.)
b. Contractor shall cut the turf with reel-type or rotary-type mowers, hand mowers, edgers, etc. with sharp blades set level. Mowing shall be done of the entire area, including turf around the driveways, sidewalks, mulched areas, etc. Finished areas shall smooth and uniform in height, with no gouges into soil or other irregularities indicating poorly-adjusted equipment or improper mowing techniques.
c. Mowing shall be done when the grass is relatively dry and ground is firm.

3. Treatment of Insects, Disease, Fungus
a. Should problems with the turf develop such as insect infestation, disease or fungus, Contractor shall immediately notify the Owner's Representative and discuss remedies available.
b. Contractor shall proceed expeditiously with selected treatment of affected areas and continue treatment until the problem is resolved. Contractor shall have Illinois Applicators License for treatment products as needed.

3.07 CLEAN UP

A. Any excess material shall be removed from the site. All improvements shall be cleaned as necessary to remove any effects of construction. Any damage to existing features shall be repaired to the satisfaction of the Owner's Representative.

END OF SECTION 32 90 00

CITY OF GRAIN VALLEY

WATER TOWER UPGRADE

DIVISION 33 – UTILITIES

TABLE OF CONTENTS

SECTION NUMBER	SECTION TITLE	PAGE NUMBER	
33 01 10.58	Disinfection of Water Utility Piping Systems	33 01 10.58	1-5
33 05 05	Utility Testing Forms	33 05 05	1-3
33 14 16	Public Water Utility Distribution Piping	33 14 16	1-13

PART 1 GENERAL

1.01 SECTION INCLUDES

A. Requirements for disinfection of water utility piping systems.

1.02 REFERENCES

A. ANSI/AWWA C600 AWWA Standard for Installation of Ductile Iron Mains & Their Appurtenances, current revision.

B. ANSI/AWWA C651 AWWA Standard for Disinfecting Water Mains, current revision.

C. ANSI/AWWA C652 AWWA Standard for Disinfection of Water-Storage Facilities, current revision.

E. Recommended Standards for Water Works, published by the American Water Works Association, current edition.

F. Grain Valley Standard Detail Drawings, current revision.

1.03 PERFORMANCE REQUIREMENTS

A. Disinfection shall not be considered complete until samples of water have been taken and tested to demonstrate and record the good sanitary condition of the water and a copy of all laboratory test results have been submitted to Engineer.
   1. Sampling procedures and testing results shall meet the requirements of the AWWA C600 and C651.
   2. Disinfection shall be repeated until satisfactory samples have been obtained.
   3. Owner will provide laboratory testing free of charge for up to three (3) samples at each location requiring disinfection sampling. If more than three samples are required at a given location, Owner can perform the testing, but will charge the Contractor standard testing fees for each additional sample.

B. Samples shall be considered satisfactory when two consecutive samples, obtained 24-hours apart are determined by bacteriological examination to contain zero bacteria colonies. The first of the consecutive samples shall be taken a minimum of 24-hours after flushing heavily chlorinated water from the facilities and filling with potable water.

1.04 SUBMITTALS

A. Submit under provisions of Section 01 33 00 - Submittal Procedures:
   1. Complete laboratory test results for bacteriological analysis of water samples taken during disinfection.
   2. Schedule and sequence for flushing and disinfection procedures. Submit at least two (2) weeks prior to commencing this work and include:
      a. Form of chlorine proposed.
      b. Form of dechlorination proposed.
      c. Description and location of appurtenances required.
      d. Name, location, and verification of certification for testing laboratory.
      e. Specific methods for disinfection.

1.05 QUALITY ASSURANCE

A. Bacteriological analysis of water samples taken to demonstrate successful disinfection shall be performed by a laboratory certified by the Missouri Department of Public Health for the examination of samples from the Public Water Supplies and their sources by the Total Coliform and Fecal Coliform Methods.

B. Dechlorinate all water used during flushing and disinfection prior to discharge to storm or sanitary sewer, trench lagoon, temporary basin, or any surface discharge point. Dechlorination shall meet requirements of AWWA C651, AWWA C652, AWWA C653, and MODNR requirements.

C. Perform all work included in this Section in accordance with:

   1. AWWA C600, C651, C652, and C653 as applicable.
   2. Grain Valley Standard Detail Drawings.
   3. Recommended Standards for Water Works.

1.06 SEQUENCING

A. Sequence the cleaning of facilities to prevent contamination of previously cleaned or disinfected facilities by water, debris, or residual material from subsequent cleaning operations.

PART 2 PRODUCTS

2.01 CHLORINE

A. Form of chlorine shall conform to ANSI/AWWA C653. Do not use calcium hypochlorite intended for swimming pool disinfection or other sequestered type of calcium hypochlorite.

PART 3 EXECUTION

3.01 GENERAL

A. Clean and disinfect the water treatment equipment, water storage facilities, pumps, valves, and piping installed under this Contract.

3.02 PREPARATION

A. Prior to installation, the interior surfaces of flowmeters, pumps, valves, piping, and miscellaneous appurtenances that will contact potable water during normal operation shall be cleaned and pre-disinfected with a one percent solution of sodium hypochlorite by spraying, swabbing, or flooding. After cleaning and pre-disinfection, all surfaces exposed to sodium hypochlorite solution shall be thoroughly rinsed with potable water, to remove any trace of potentially corrosive residuals from the cleaning and pre-disinfection.

B. If so needed, pumps and valves shall be disassembled sufficiently to achieve satisfactory cleaning and pre-disinfection prior to installation.

C. After installation, erection, and painting:
   1. Flush piping in accordance with AWWA C651 and Grain Valley Standard Detail Drawings.
   2. Remove all materials not part of the structural or operational components and all debris from treatment vessels and storage vessels prior to cleaning.
   3. Clean the surfaces that will be exposed to potable water or its vapor during normal plant operation on all process vessels, equipment, pumps, piping, valves, and storage vessels by high-pressure washing, sweeping, scrubbing, or other equally effective means.
   4. After cleaning, vacuum, discharge, or otherwise remove all water, debris, and residual material remaining in all process vessels, equipment, pumps, piping, valves, and storage vessels.

D. Clean all piping, valves, flowmeters, and equipment provided under this Contract sufficiently for disinfection of each item provided whether or not item is scheduled for disinfection.

E. Install necessary flushing taps, sampling taps and temporary plugs, valves and piping to achieve the required flushing, disinfection, and sampling for each set of isolated piping, and equipment.

3.03 DISINFECTION

A. Major items to be disinfected include:
   1. All potable water piping, tank and valves.

B. Disinfection shall not be conducted until all work is complete and cleaned.

C. Withdraw water samples from piping and/or equipment isolated for disinfection and submit samples to an MODNR certified bacteriological testing laboratory.

D. Continue to obtain and submit samples for testing until satisfactory samples are obtained.

E. Protect the Owner's water distribution system from contamination by:
   1. Water from piping that is not disinfected.
   2. Heavily chlorinated water.

F. The Owner shall furnish water to the Contractor at no cost for the initial disinfection. In the event the initial disinfection work does not produce satisfactory results, the Owner shall provide water at a rate of $3.00 per thousand gallons for subsequent disinfection work.

G. Owner has an MODNR certified testing laboratory and will provide laboratory testing free of charge for up to three (3) samples at each location requiring disinfection sampling. If more than three (3) samples are required at a given location, Owner can perform the testing, but will charge the Contractor standard testing fees for each additional sample.

3.04 BACTERIOLOGICAL SAMPLING AND TESTING

A. City will perform bacteriological testing, reporting and interpretation of testing results.

B. Bacteriological sampling shall be handled in accordance with MODNR and Missouri Department of Public Health requirements.

B. Contractor shall coordinate with City and Engineer to take water samples with the approved disinfection plan or as directed by City.

C. Water shall be sampled from cold water taps that are free from hose attachments and water purification devices.

C. City will provide bottles for sampling. Sample bottles shall be of at least 120 mL capacity, sterile plastic or hard glass, wide mouthed with glass stopper or screw cap. Prior to sterilization of the sample bottles, sodium thiosulfate shall be added to the sample bottles in an amount sufficient to provide an approximate concentration of 100 mg per liter of sample.

D. Prior to Collecting the Sample
   1. Adjust the flow of water to a stream approximately the size of a pencil.
   2. Allow the water to run from the tap for 2 to 3 minutes.
   3. Test for free and total residual chlorine by DPD colorimetric or other USEPA approved method.

E. Do not collect sample if free and/or total chlorine residuals exceed the levels found in the source of potable water used to flush the heavily chlorinated water from the facilities being disinfected and sampled.

F. Collecting the Sample
   1. A sample shall be taken immediately following the removal of the cap from the sample bottle. Do not rinse the bottle or touch the rim of the bottle or the

inside of the cap with fingers or with the spout of the sampling point.

2. The contractor shall take two (2) sets of Bac-T samples, one immediately after the final flush, the second taken 24 hours later.
3. A minimum sample volume of 100 mL shall be collected.
4. The sample bottle shall be filled allowing at least ¼-inch of air space from the top to provide space for mixing.
5. Schedule sample collection such that the time of initiation of analysis shall not exceed 8 hours from time of collection.
6. The contractor shall coordinate disinfectant testing and bacteriological testing to demonstrate that the above requirements have been met.
7. A city representative and/or engineer shall be present to observe all sampling.
8. City will deliver and pay for all bacteriological testing. City will provide copies of all testing reports to Contractor.

G. Record the time and location of the sampling point for each sample of water drawn for bacteriological analysis. Maintain records necessary to establish chain-of-custody of the samples.

H. The sample report form shall be completed in indelible ink immediately after collecting the sample and shall contain the name of the system (public water site identification, if available), sample identification (if any), date and time of collection, sample site location, sample collector's name and organization (if not the water system), persons transporting the samples from the system to the laboratory (if not the sampler), transportation conditions (e.g. less than 10°C, protection from sunlight), sample type (e.g. routine, repeat), and total chlorine residual (if applicable).

I. When the sample is delivered to the laboratory, the following information shall be added to the sample report form:
   1. Date and time of sample arrival;
   2. Name of carrier;
   3. Name of the person receiving the sample for the laboratory; and
   4. Assigned laboratory number. (In the event of a repeat or replace sample, the number assigned to the original sample shall also be recorded).

END OF SECTION 33 01 10.58

PART 1 GENERAL

1.01 DESCRIPTION

A. Contractor shall perform testing of utilities as referenced in these specifications and shall document said tests using forms contained in this section.
1. Pipeline Pressure Testing

1.02 RELATED SECTIONS

A. Section 33 14 16 – Public Water Utility Distribution Piping

1.03 REFERENCE TO STANDARDS

A. Standards for Disinfecting Water Mains, AWWA C651.

1.04 PRODUCT / MANUFACTURER / INSTALLER QUALIFICATION REQUIREMENTS - RESERVED

1.05 SUBMITTAL REQUIREMENTS - RESERVED

1.06 QUALITY ASSURANCE - RESERVED

1.07 WARRANTY - RESERVED

1.08 OPERATIONS AND MAINTENANCE MANUALS - RESERVED

1.09 DELIVERY, STORAGE, AND HANDLING - RESERVED

1.10 RECORD DOCUMENTS - RESERVED

PART 2 PRODUCTS - RESERVED

PART 3 EXECUTION

3.01 GENERAL

A. Utilize the forms provided in this Section for documenting testing results.

3.02 INSTALLATION - RESERVED

3.03 TESTING:

A. Perform testing in accordance with applicable standards.

3.04 MANUFACTURER’S SERVICES:

A. Utilize the services of manufacturer’s representative to perform testing.

3.05 FINAL ACCEPTANCE:

A. Final payment contingent on submission of all testing reports.

END OF SECTION 33 05 05

PIPELINE PRESSURE TESTING RECORD

DATE:_____ RECORD NO._____
Contractor:_____

Plant / Project Location:_____
Pipeline Tested (Service):_____
Location & Description:_____
Pipe Size & Materials:_____
Length of Pipeline Tested:_____
Operating Pressure:_____ PSIG

Specification Test Pressure:_____ PSIG

Actual Test Pressure:_____ PSIG

Testing Material (Water, Air, etc.):_____
Test Started:_____ Pressure:_____ PSIG

Test Completed:_____ Pressure:_____ PSIG

Duration: _____ Pressure: Rise/Drop_____ PSIG

Test: Pass/Fail_____
Witness By:_____ Date:_____
Owner (Authorized Signature)

Title:_____ For: _____
(Owner)

Witness By:_____ Date:_____
Contractor (Authorized Signature)

Title:_____ For:_____
(Contractor's Name)

Description of Repairs Made: See Reverse Side

General Comments: See Reverse Side

Distribution: Owner, CMT, Contractor, Sub-Contractor, _____

Description of Repairs Made:

General Comments:

DIVISION 33 – UTILITIES
Section 33 14 16 – Public Water Utility Distribution Piping

PART 1 GENERAL

1.01 SUMMARY

A. Section Includes:
   1. Pipe and fittings, gate valves and boxes, butterfly valves and boxes, and fire hydrants for water main installation.

1.02 GENERAL

A. Like items of material provided hereunder shall be the end products of one manufacturer in order to achieve standardization for appearance.

1.03 SUBMITTALS

A. Submittals shall be made in accordance with Section 01 30 00 – Submittal Procedures. In addition, the following specific information shall be provided by the Contractor:
   1. Submit shop drawings and complete product data that shall include description of materials, construction, function, and operation for each product and material component and assembly specified or implied herein (including the manufacturer's installation instructions) for each of the following:
      a. Each size, class, material, and joint-type of pipe being provided.
      b. Each valve size and end-type being provided.
      c. Valve boxes.
      d. Each size, pattern, and joint-type of fittings being provided.
      e. Each type and size of fire hydrant being provided.

B. Submit with the product data, copies of current Certified Product Listing published by Underwriters Laboratory or NSF International for Drinking Water System Components (ANSI/NSF Standard 61) for all products provided for service in contact with potable water.

C. Contractor shall submit a plan for abandoning existing watermains, valves, hydrants, and services. Plan shall be submitted at least 4 weeks prior to any abandonment and shall be coordinated with the sequence of construction schedule.

1.04 REFERENCE TO STANDARDS

A. The portions of the work specified in this section shall conform to the following standards, rules, and regulations with modifications and additional requirements as stated in or reasonably inferred from the Contract Documents.
   1. Grain Valley Standard Detail Drawings, July 2021.

2. AWWA C104: ANSI/AWWA C104/A21.4-95, American National Standard for Cement-Mortar Lining for Ductile-Iron Pipe and Fittings for Water, as published by American Water Works Association.
3. AWWA C105: ANSI/AWWA C105/21.5--93, American National Standard for Polyethylene Encasement for Ductile-Iron Pipe Systems, as published by American Water Works Association.
4. AWWA C110: ANSI/AWWA C110/A21.10-93, American National Standard for Ductile-Iron and Gray-Iron Fittings, 3 in. through 48 in. for Water and Other Liquids, as published by American Water Works Association.
5. AWWA C111: ANSI/AWWA C111/A21.11-95, AWWA Standard for Rubber-Gasket Joints for Ductile-Iron Pressure Pipe and Fittings, as published by American Water Works Association.
6. AWWA C115: ANSI/AWWA C115/A21.15-94, American National Standard for Flanged Ductile-Iron Pipe with Ductile-Iron or Gray-Iron Threaded Flanges, as published by American Water Works Association.
7. AWWA C151: ANSI/AWWA C151/A21.51-96, American National Standard for Ductile-Iron Pipe, Centrifugally Cast, for Water, as published by American Water Works Association.
8. AWWA C153: ANSI/AWWA C153/A21.53-94, American National Standard for Ductile-Iron Compact Fittings, 3 in. through 24 in. and 54 in. through 64 in. for Water Service, as published by American Water Works Association.
9. AWWA C502: ANSI/AWWA C502-94, AWWA Standard for Dry-Barrel Fire Hydrants, as published by American Water Works Association.
10. AWWA C509: ANSI/AWWA C509-94, AWWA Standard for Resilient-Seated Gate Valves for Water Supply Service, as published by American Water Works Association.
11. AWWA C600: ANSI/AWWA C600-93, AWWA Standard for Installation of Ductile-Iron Water Mains and their Appurtenances, as published by American Water Works Association.
12. AWWA C651: ANSI/AWWA C651-92, AWWA Standard for Disinfecting Water Mains, published by American Water Works Association.
13. AWWA C909: Standard for Molicularly Oriented Poly Vinyl Chloride (PVCO) Pressure Pipe, 4 in. through 12 in., for Water Distribution.
14. ASTM D1784: Specification for Rigid PolyVinyl chloride compounds and Chlorinated PolyVinyl chloride compounds.
15. ASTM D2241 Performance Requirements: Specification for PVC Pressure-Rated Pipe (SDR Series).
16. ASTM D2672: Joints for IPS PVC Pipe Using Solvent Cement.
17. ASTM D3139: Specification for Joints for Plastic Pressure Pipes Using Flexible Elastomeric Seals.

1.05 REGULATORY REQUIREMENTS

A. All products provided under this section for service in contact with potable water shall be tested and certified by Underwriters Laboratory or NSF International (as an ANSI accredited certifier) against NSF 61: Drinking Water System Components – Health Effects.
B. All materials that come in contact with potable water shall comply with the 2014 no lead standards as defined in the Reduction of Lead in Drinking Water Act

(January 2011) and shall be tested and certified against NSF 372: Drinking Water System Components – Lead Content.

PART 2 PRODUCTS

2.01 MATERIAL SELECTION

A. Watermain shall be the type specified herein
B. Valves and Boxes shall be the type specified herein
C. Fire Hydrants shall be the type specified herein

2.02 DUCTILE IRON PIPE

A. Pipe Materials:
   1. Water main on this project shall be ductile iron pipe.
   2. Ductile iron pipe (D.I.P.) shall be:
      a. In accordance with AWWA C151.
      b. All pipe shall have a Brinell Hardness of less than 230 BHN.
      c. Minimum wall thickness for pipe having push-on or mechanical joints, restrained joints, plain ends, or cast flange ends shall be Thickness Class 50. The minimum wall thickness for threaded flanges shall be Thickness Class 50.
      d. Lined with standard-thickness cement-mortar lining with seal coat in accordance with AWWA C104.
      e. Coated on all exterior surfaces with an asphaltic coating.

B. Pipe Joints:
   1. Mechanical and push-on joints for pipe and fittings shall conform to AWWA C111. Flanged joints shall conform to AWWA C115 with ANSI B16.1, Class 125, flat-faced flanges. Bolts and nuts shall conform to ASTM A307, Grade B. Restrained retainer gland joints shall be Mega-Lug 1100 series as manufactured by EBAA Iron Works. As an alternate to restrained retainer gland joints, restrained joints using a boltless design, American Ductile Iron Pipe “Flex-Ring” or U.S. Pipe “TR-FLEX”, or Griffin Pipe Products “SNAP-LOK” may be used. Restrained retainer gland joints are required when connecting to fittings. Restrained joints using a boltless design shall be used for full length joints where called out on the Drawings for restrained joints. No substitutions other than those listed in this paragraph will be acceptable for use in thrust restraint locations.

C. GASKETS
   1. Flanged joint gaskets shall be ring type and conform to ANSI B16.21.

D. Exterior Coating
   1. The exterior of ductile iron pipe (not including fittings) shall be coated with a layer of arc-sprayed zine conforming to ISO 8179-1.
   2. The mass of the zine applied shall be 200 g/m' of pipe surface area.
   3. A finishing layer topcoat shall be applied to the zinc.

4. The mean dry film thickness of the finishing layer shall not be less than 3 mils with a local minimum not less than 2 mils.
5. The manufacturer shall clearly mark the outside of each pipe indicating the pipe has been coated in accordance with these specifications.

E. Polyethylene Encasement
1. All buried ductile iron pipe, including all appurtenances (fittings, valves, etc.) shall have a polyethylene encasement meeting ASTM D4976 and AWWA C105/ANSI A21.5. Encasement shall be installed per the Ductile Iron Pipe Association (DIPRA) installation guide.
2. Contractor may use either Linear Low Density (LLD), High Density Cross Laminated (HDCL) or V-Bio Enhanced Polyethylene film with the minimum properties indicated in the table below.

Minimum Requirements for Polyethylene Encasement			
Item	**LLD**	**HDCL**	**V-Bio**
Thickness, mil	12	4	8
Tensile Strengh, psi	4,400	6,300	3,600
Elongation, percent	1,000	100	700
Dielectric Strength, v/mil	1,900	800	800
Tear Resistance, gf	4,400	250	2,550
Impact Resistance, g	1,100	800	600

3. Polyethylene encasement shall be provided in tubes. Sheeting is not allowed. The minimum tube size for each pipe diameter shall be in accordance with the table below.

Polyethylene Flat Tube Width (inches)		
Nominal Pipe Diameter (inches)	**Push-on Bell & Spigot Joints**	**Mechanical Joints**
8	21	24
12	29	30
16	37	37
24	53	53

4. Color: the color of polyethylene encasement shall be blue for Linear Low Density (LLD) and High Density Cross Laminated (HDCL).
5. Adhesive Tape: Adhesive tape shall be a general purpose adhesive tape 1-inch wide and approximately 8 mils thick, such as Scotch Tape No. 50, Polyken No. 900, Tape coat CT or approved equal (duct tape is not allowed).

2.03 GATE VALVE AND BOX, (ALL DIAMETERS)

A. Gate valves shall conform to the following:
1. Resilient seat/wedge, NRS type rated for 250 psig cold water working pressure.

2. In full accordance with ANSI/AWWA C509 or ANSI/AWWA C515 for 4-inch through 16-inch sizes and in accordance with all applicable provisions of ANSI/AWWA C509 for 18-inch through 24-inch sizes.
3. Fitted with ductile-iron valve body, bonnet, and gate.
4. Marked with the words “D.I.” or “Ductile Iron” cast on the valve or stamped on a permanently attached corrosion resistant metal tag.
5. Provided with wedge gate that is encapsulated with rubber, symmetrical, and seals equally well with flow in either direction.
6. Provided with O-ring stem seals.
7. Certified in accordance with ANSI/NSF Standard 61 by either Underwriters Laboratory or NSF International.
8. Operated by standard 2-inch, square, wrench-nut.
9. Manufactured to open left (counterclockwise stem rotation).
10. Provided with a fusion bonded epoxy coating complying with ANSI/AWWA C550 on all internal and external surfaces of the valve body and bonnet.
11. Furnished with mechanical-joint ends and be installed with mechanical joint restraint glands as specified for ductile iron fittings. Valves installed in restrained joint pipe may be furnished with ends compatible with and restrained by the type of restrained joint pipe” installed. Valves shown on the Drawings to be attached to a flanged hydrant shoe, tapping valve, tapping saddle, or flanged branch of a tee or cross shall have one flanged end compatible with the mating flange.
13. Gate valves shall be Resilient Seat Gate Valve as manufactured by Pratt or approved equal.

B. Valve boxes shall conform to the following:
1. Two-piece, cast iron, screw-type adjustable boxes with cover marked “WATER”.
2. 5-1/4" inside diameter.
3. Be one of the following:
a. Clay & Bailey #2194.
c. Or approved equal.

2.04 BUTTERFLY VALVES (ALL DIAMETERS)

A. Type: Rubber sealed butterfly valve, manual actuators shall be of traveling nut, self-locking type. Valve shall be suitable for a differential pressure of 250 psig and be certified to NSF Standard #61.

B. Butterfly valve material shall be as specified in the table below:

1.	Body	ASTM A536 Ductile Iron
2.	Shaft	ASTM A564, type 630, condition H-1150
3.	Bearing	316 Stainless Steel
4.	Disc	ASTM A536 Ductile Iron
5.	Disc Edge	316 Stainless Steel
6.	Pin	ASTM A564, type 630, condition H-1150
7.	Seat	EPDM

C. Connections

1. Buried: Mechanical Joint

D. Standards: AWWA C504, Rubber Sealed Butterfly Valves, Class 250B Standard

E. Installation: Unless necessary due to installation conditions and approved by Engineer, the valve shall be installed with the higher pressure on the seat side

F. Manufacturers:
1. Pratt (HP250II D.I. MJ Butterfly Valve)

2.05 DUCTILE IRON FITTINGS

A. Fittings shall include bends, tees, crosses, sleeves, reducers, wyes, and any other fittings shown on the drawings.

B. Provide ductile-iron fittings in accordance with the full requirements and intent of the Contract Documents from one of the following manufacturers.
1. McWane Company of Birmingham Alabama.
2. Sigma Corporation.
3. Star Pipe Company.
4. Or equal.

C. Fittings shall be ductile iron, standard thickness cement-mortar lined with seal coat in accordance with AWWA C104. Where taps are shown on fittings, tapping bosses shall be provided. Fittings for buried installation shall have an asphaltic coating applied to the exterior in accordance with AWWA C151.

D. Flanged and Mechanical Joint fittings shall conform to AWWA C110 or C-153.

E. Unless indicated otherwise on the Drawings, Ductile Iron Fittings on this project shall have restrained joints with rubber gaskets in accordance with ANSI/AWWA C111/A21.11 and shall be mechanical joints with restraint glands. Restraint of mechanical joints between pipes and fittings shall be incorporated into the follower gland and shall include a mechanism to impart multiple wedging action that increases with increasing pipe pressure. Follower glands with restraining mechanisms shall be manufactured of ductile iron conforming to ASTM A536, shall conform to and shall be compatible with dimensions of mechanical joints conforming to AWWA C111 and AWWA C153, shall have a working pressure of 250 psig, and shall have a minimum design safety factory of 2:1. The mechanical joint follower gland with restraint mechanism shall be Series 1100 MegaLug as manufactured by EBAA Iron, Inc., Uni-Flange Series 1400 as manufactured by Ford Meter Box Company or equal.

F. Fittings shall have mechanical joint ends unless shown otherwise.

2.06 FIRE HYDRANT, 3-WAY

A. The following requirements modify or are in addition to the Standard Specifications.
1. Hydrants shall be designed, manufactured, and tested in accordance with AWWA C502.

2. Hydrants shall be “Traffic” type with a replaceable “breakable” unit immediately above the ground line for minimizing repairs due to traffic damage.
3. Hydrants shall be of the compression type, constructed such that the main valve closes with the water pressure to assure no loss of water in the event of damage to the upper portion of the hydrant.
4. Hydrants shall be of the dry top design with O-ring seals to insure that the operating threads will be protected from water entry. The dry top design shall include a factory lubricated operating mechanism which allows a supplemental lubricant to be added in the field without the removal of the top section.
5. Hydrants shall have a “Weather Shield” or “Weather Cap” to protect the clearance area between the top casting and the operating nut from moisture and possible frost damage.
6. The operating nut and nozzle cap nuts are to be pentagon in shape and measure 12 inches from point to opposite flat at the base of the nut. Caps shall be provided with rubber gaskets and chains.
7. Hydrants shall have 1- 4” pumper NST and 2-2.5” hose nozzle NST. Hydrants shall utilize standard nozzle caps.
8. Hydrant nozzle section shall be capable of rotation through 360 degrees with respect to the standpipe.
9. The allowable distance between the centerline of the lowest nozzle and the ground line shall be not less than 16 inches and not greater than 22 inches.
10. Hydrants shall have permanent markings cast into the upper barrel assembly, identifying the manufacturer, name and size of main valve opening, and year of manufacture.
11. Hydrants shall have an identification mark indicating direction of opening and shall be “open right”.
12. Hydrants shall have an automatic drain that is opened by the main valve rod. Drain valve shall open as the main valve is closed and close as the main valve is opened. The port and seat of the main valve is to be bronze. The hydrant shall have two drain valves and outlets.
13. Exterior of hydrant top section shall be painted a minimum of one coat of primer and one finish coat of enamel that is red in color.
14. The shoe of the hydrant shall be provided with a standard flange connection 6 inches in size. The internal surface of the shoe and lower valve assembly shall be coated with a factory applied epoxy coating with a minimum dry film thickness of 4 mils.
15. The bronze valve seat shall be threaded into a bronze drain ring or shoe bushing to prevent electrolysis between these components. The drain channel shall be all bronze or be lined with naval brass.
16. Hydrants shall be designed to permit the use of extension sections and allow all parts to be removable from ground level without requiring excavation of the hydrant.
17. Installation shall be in accordance with Grain Valley Standard Detail Drawing Fire Hydrant Detail WAT-001. Drain field shall be a minimum 0.5 cubic yard of 1” clean, washed rock. Hydrant testing shall be in accordance with AWWA C600 and AWWA Manual M-17.
18. Hydrants furnished under this section shall be accompanied by a certification, signed by an officer of the manufacturing company, that the

hydrants meet all aspects and standards contained within this specification.

19. Hydrants shall have a standard test pressure of 150 psig working water pressure and 300 psig test pressure, and be certified as such by the manufacturer.
20. Drain valve shall not utilize springs, toggles, levers, or other small working parts. Drain valve facing shall be made of Buna N or Nylon. Leather will not be acceptable.

C. Where new fire hydrant leads are to cross existing utilities (such as water mains to be abandoned), the Contractor shall pothole the existing utility and shall adjust the depth of the new water main accordingly to avoid the utility. The depth shall be determined prior to ordering the correct depth of bury for the fire hydrant.

D. Hydrants shall be WB-67 manufactured by Waterous or Super Centurion as manufactured by Mueller Company.

PART 3 EXECUTION

3.01 DUCTILE IRON WATER MAIN, ALL DIAMETERS

A. Under these items, install water main as shown on the Drawings and in accordance with AWWA C600, the following portion of the Grain Valley Standard Detail Drawings and the following requirements that may modify the Standard Specifications and AWWA C600:

B. The following requirements modify or are in addition to the Grain Valley Standard Detail Drawings.

1. Assembly of buried pipe and fittings shall be in accordance with the manufacturer's written instructions and recommendations.
2. Field cut pipe shall be cut square, beveled, field-gauged, and rounded in accordance with manufacturers written instructions and recommendations.
3. Solid sleeves shall be installed with buried piping where shown on plans. Provide a make-up pipe spacer to fill the gap between pipe ends covered by the sleeve. The pipe spacer shall be cut from the same pipe material as adjacent pipe and shall be cut to length such that all adjacent joints remain fully seated.
4. All buried piping shall be uniformly sloped and installed to the line and grade indicated on the drawings. Minimum depth of cover shall be 4'-0", unless noted otherwise on the drawings.
5. If a grade conflict is determined, the Contractor shall notify the Engineer, who shall then determine what adjustments are required.

C. Thrust Blocks

1. Thrust block all crosses, tees, bends, plugs, fire hydrants and valves against undisturbed earth as detailed in the drawings. Backfill thrust blocks a minimum of 24-hours after placement.
2. Thrust blocks or misplaced concrete shall not contact the bell face or fasteners of any pipe, fitting, or valve.

3.02 GATE VALVE AND BOX, (ALL DIAMETERS)

A. Under these items, install gate valves and boxes as shown on the Drawings and in accordance with the MDNR Design Standards for Missouri Community Water Systems.

3.03 BUTTERFLY VALVE AND BOX, (ALL DIAMETERS)

A. Under these items, install butterfly valves and boxes as shown on the Drawings and in accordance with the MDNR Design Standards for Missouri Community Water Systems.

3.04 DUCTILE IRON FITTINGS

A. Under this item, install ductile iron fittings as shown on the Drawings and in accordance with the MDNR Design Standards for Missouri Community Water Systems.

3.05 FIRE HYDRANT, 3-WAY

A. Under this item, install fire hydrants as shown on the Drawings and in accordance with the MDNR Design Standards for Missouri Community Water Systems.

3.06 CONNECTION OF PROPOSED WATER MAIN TO EXISTING WATER MAIN

A. Under this item, connect the proposed water main to the existing water main as shown on the Drawings

B. Each segment of water main being installed shall be initially connected to the existing main as indicated on the Drawings. Connection points shall be valved and shall be the source of water for flushing, disinfection and testing.

C. The Contractor shall be responsible for determining the type and outside diameter of existing water main pipe in order to obtain the proper fittings.

D. Connections to existing mains shall have no visible leakage. Contractor shall leave excavation open at connection to existing main and under pressure for Engineer to inspect for leakage.

E. Where short lengths of main must be returned to service immediately after installation, all pipe and fittings shall be swabbed with chlorine solution prior to installation.

3.07 POLYETHYLENE ENCASEMENT

A. Polyethylene encasement shall be installed on all ductile iron pipe, fittings, appurtenances, and tap service lines within 3 feet of the water main. The polyethylene shall be installed in a manner to prevent contact between the pipe, fittings, and the surrounding embedment.

B. The polyethylene encasement shall be installed as follows:
    a. Polyethylene encasement tubing shall be approximately two (2) feet longer than the length of the pipe section to provide a one (1) foot of overlap on each adjacent pipe.
    b. Repair rips, punctures, or other damages to the polyethylene encasement with adhesive tape or with a short length of polyethylene tube cut open, wrapped around the pipe, and secured with adhesive tape as directed by the City.
    c. Bolted Connections: All bolted connection shall by protected by 2 layers of polyethylene encasement. A minimum of 6 inches of overlap is required on each side of the connection.
    d. Pipe-Shaped Appurtenances: Bends, reducers, offsets, and other pipe-shaped appurtenances shall be covered with polyethylene in the same manner as the pipe.
    e. Odd-Shaped Appurtenances:
        i. Valves, tees, crosses, and other odd-shaped pieces that cannot practically be wrapped in a tube shall be wrapped with a flat sheet or split length of polyethylene encasement tube.
        ii. The sheet shall be passed under the appurtenance and brought up around the body.
        iii. Seams shall be made by bringing the edges together, folding over twice, and taping
        iv. Tape polyethylene encasement securely in place at overlaps, valve tops and all other penetrations.
    f. Lifting devices shall not be placed over polyethylene.
    g. Polyethylene shall be protected from exposure to weather or damage at all times.
    h. Openings in Encasement:
        i. Openings for branches, blow-offs, air valves, and similar appurtenances shall be made by making an x-shaped cut in the polyethylene and temporarily folding the film back.
        ii. After the appurtenance is installed, tape the slack securely to the appurtenance and repair the cut as well as any other damaged areas in the polyethylene with tape.
        iii. The new appurtenance shall be wrapped.
    i. Junctions between Wrapped and Unwrapped Pipe:
        i. Where polyethylene wrapped pipe joins an existing pipe which is not wrapped, extend the polyethylene tube to cover the unwrapped pipe a distance of at least three feet.
        ii. Secure the end with three circumferential turns of tape.
    j. Service Taps:
        i. Wrap 3 layers of adhesive tape over the polyethylene encasement, covering the area where the tapping machine will be mounted.
        ii. Mount the machine over the tape.
        iii. Make the tap and install the corporation stop through the tape and polyethylene encasement.
        iv. After making the service connection, inspect the polyethylene and repair damaged areas with tape.

3.08 INSTALLATION REQUIREMENTS

C. All valves, boxes, tees and crosses shall be installed level.

D. Contractor shall excavate for the individual services as the new main is installed. Any excavations associated with potholing of services prior to installation of the new main shall be backfilled by the end of the day.

E. Plugs
1. Installed piping systems shall be temporarily plugged at the end of each day's work, or other interruption to progress on a given line. Plugging shall be adequate to prevent entry of small animals or persons into the pipe or the entrance or insertion of deleterious materials.
2. Standard plugs shall be inserted into all dead-end pipes, tees, or crosses; spigot ends shall be capped; flanged and mechanical joint ends shall have blind flanges of metal.
3. Plugs installed for pressure testing shall be blind flanges fully secured and blocked to withstand the test pressure.
4. Where plugging is required because of contract division or phasing for later connection, the ends of such lines shall be equipped with a permanent type plug or blind flange. Installation or removal of such plugging shall be considered incidental to the work.

F. Concrete Cradles, Encasement, Reaction Blocks and Restraining
1. Concrete cradles, encasement and reaction blocks shall be as indicated on the Drawings. Concrete thrust blocks shall be provided on pressure piping at all changes in direction. Thrust blocks are required in addition to the flanged, restrained retainer glands, or restrained joint fittings. All concrete cradles, anchors, and reaction blocks shall be of Class B concrete.
2. Reaction or thrust blocks shall be constructed at all tees, plugs, caps, and at bends deflecting 11-1/4 degrees or more. Thrust blocks shall be installed on any slopes exceeding 10 degrees from horizontal; using one block at least 3 cubic feet in volume for each successive three lengths of pipe on such slope.
3. Blocks shall be poured between undisturbed soil and fittings. Concrete shall be so placed that pipe joints and fitting joints will be accessible for repair. The dimensions of concrete thrust blocks shall be as indicated on the Drawings, but in no case less than 2 cubic feet in volume.
4. Class B Concrete shall be a 6 bag mix with a minimum 28 day compressive strength of 3000 psi.
5. Granular bedding shall be FA-6 conforming with ASTM C-33.

G. Contractor shall not operate existing water valves.

H. All fire hydrants shall be installed prior to the hydrostatic testing of the water main so that all items (water main, fire hydrants, valves, etc) are tested as one complete system. This shall occur prior to abandonment of the existing water main.

I. Owner will inspect fire hydrants, valves, and other miscellaneous materials immediately upon removal and if it is determined the materials can be reused, the Owner will salvage and remove the materials off-site. If the materials cannot be reused, the Contractor will legally dispose of the materials off-site.

J. After the new water main has been installed satisfactorily, disinfected and approval given by the Owner, the existing watermains shall be abandoned as noted on the Drawings and described herein. The limits of the pipelines to be abandoned are shown on the Drawings. All fire hydrants and valve boxes within the limits shown shall be removed to a minimum one foot below grade. All pipelines shall be drained and the pipe ends plugged with a mechanical joint cap. All curb boxes shall be removed.

3.09 TESTING

A. General:
   1. Conduct pressure and leakage tests on all newly installed pipelines or segments of pipelines. Furnish all necessary equipment and material and make all permanent or temporary connections or plugs to the pipe, as required to perform testing on pipe segments. Properly restrain all segments to be tested. The Engineer will monitor the tests. Test pressures and type of test shall be as specified and as shown on the Drawings.
   2. Testing New Pipe Which Connects to Existing Pipe: New pipelines which are to be connected to existing pipelines shall be tested by isolating the new pipe with special valves or blind flanges as necessary. Costs of valves and blind flanges used for this testing shall be incidental to new pipeline being tested.

B. Pressure Tests for Pressure Pipe
   1. Pressure tests shall be in accordance with City of Grain Valley Standard Specifications.

   2. All buried piping shall be subject to pressure tests as specified herein. After the pipe has been laid and backfilled, the pipe shall be subjected to hydrostatic pressure tests in accordance with the latest edition of AWWA Standards and Manuals. The test pressure shall be a minimum of 1.5 times the maximum operating pressure of the pipe system.

   3. The duration of each pressure test shall be for a period of not less than two hours and not more than six hours. The basic provisions of AWWA C600 shall be applicable.

   4. Each section of pipe to be tested shall be slowly filled with water and the specified test pressure shall be applied by means of a pump connected to the pipe in a satisfactory manner. The pump pipe connection and all necessary apparatus including gauges and meters shall be furnished by the Contractor. Before applying the specified test pressure, all air shall be expelled from the pipe. To accomplish this, taps shall be made, if necessary, at points of highest elevation and afterwards tightly plugged. Any cracked or defective pipes, fittings, valves, or hydrants discovered in

consequence of this pressure test shall be removed and replaced by the Contractor at the Contractor's expense with sound material and the test shall be repeated until satisfactory to the Engineer.

C. Leakage Tests for Pressure Pipe
   1. Concurrently with the pressure test, a leakage test shall be conducted to determine the quantity of water lost by leakage under the specified test pressure. Applicable provisions of AWWA C600 shall apply. Duration of each leakage test shall be a minimum of two hours. Allowable leakage is defined in AWWA C600.

D. Test Records: Records shall be made of each piping system installation during the test and recorded on the form provided in the contract documents (Document 33 05 05 – Utility Testing Forms). These records shall include but not limited to the following:
   1. Date of test.
   2. Description and identification of piping tested.
   3. Test fluid.
   4. Test pressure.
   5. Remarks, to include such items as:
      a. Leaks (type, location).
      b. Repairs made on leaks
   6. Certification by Contractor and signed acknowledgement by Engineer.

END OF SECTION 33 14 16

CITY OF GRAIN VALLEY

WATER TOWER UPGRADE

DIVISION 40 – PROCESS INTERCONNECTIONS

TABLE OF CONTENTS

SECTION NUMBER	SECTION TITLE	PAGE NUMBER	
40 05 06	Couplings, Adapters and Specials for Process Piping	40 05 06	1-4
40 05 07	Sleeves, Supports, Hangers, Anchors and Seals	40 05 07	1-7
40 05 24	Fabricated Welded Steel Pipe and Fittings	40 05 24	1-6
40 05 51	General Requirements for Valves and Valve Actuators	40 05 51	1-6
40 05 53	Valves	40 05 53	1-6
40 05 53.2	Electronic Control Valves	40 05 53.2	1-6
40 72 00	Level Sensing and Measurement	40 72 00	1-7
40 73 13	Pressure Control	40 73 13	1-2

PART 1 GENERAL

1.01 SUMMARY

A. This section includes the ancillary equipment necessary to provide a complete and operational piping system including pipe supports, couplings, adapters and piping appurtenances.

B. Related Sections:

1. Section 09 96 00 – High Performance Coatings
2. Section 33 14 18 – Public Water Utility Distribution Piping
3. Section 40 05 00 – Common Work Results for Process Interconnections

1.02 SUBMITTALS

A. Submittals shall meet the requirements of Section 01 33 00 – Submittal Procedures.

B. All types of valves shall be submitted for review. Sufficient information shall be presented to allow proper evaluation. Complete dimensional information is required.

C. The submittals shall reference the plan sheets and indicate the intended use for the valve submitted.

1.03 QUALITY ASSURANCE

A. The contractor shall establish and maintain quality control of all piping and accessories on the project. To assure contract compliance, the contractor shall maintain records of his quality control efforts as listed below.

B. Check for damage to and defects in material.

C. Check for proper storage of piping and accessories and provide a systematic list of piping and accessories on site along with their location.

D. Check to see that all pieces and accessories incorporated into the piping systems have been submitted and reviewed.

E. Coordinate submittals to assure correct dimensions, etc.

1.04 STORAGE AND HANDLING

A. Piping couplings, adapters and specials shall be stored on site on pallets and kept free from sand and other debris. Storage shall be such that no water is trapped in or on any part of the valves.

1.05 WARRANTY

A. The valves furnished and installed are subject to the one year warranty provisions of the General Conditions.

PART 2 PRODUCTS

2.01 PIPE COUPLINGS AND EXPANSION JOINTS

A. Flexible couplings or expansion joints shall be provided for piping systems and at connections to equipment where shown on the Drawings. The Contractor may propose to install additional flexible couplings to facilitate piping installation, if he submits complete details describing location, pipe supports, and hydraulic thrust protection, if required. Acceptable types of flexible couplings and expansion joints shall be as follows:

1. General: Flexible couplings, transition couplings, and flanged coupling adapters shall be provided with thrust ties. Thrust ties shall be attached to steel pipe with fabricated lugs, and to ductile iron pipe with cast-in-place lugs or flange lugs or socket clamps thrust tied across pipe couplings or flanges. Thrust protection shall be adequate to sustain the force developed by 1-1/2 times the operating pressure specified.

2. Sleeve Type Flexible Couplings: Except as noted, sleeve type flexible couplings for use with
   a. Steel Pipe
      i Dresser, Style 38; Smith-Blair, Style 411; Romac 400; or equal.
   b. Ductile Iron Pipe
      i Dresser, Style 138; Smith-Blair, Style 441; Powerseal 3501; Romac 501; or equal, with low alloy steel bolts and nuts unless noted otherwise on drawings.

3. Groove Type Flexible Couplings: Except as noted, groove type flexible couplings for use with both steel and ductile/cast iron pipe, the pipe grooves shall be machined to allow maximum separation between joined pipe ends.
   a. Steel Pipe
      i Victaulic Style 75 for sizes 1”-8”, Style 77 for sizes 10”-24”, or equal.

   b. Ductile or Cast Iron Pipe
      i Victaulic Style 31, or equal.

4. Transition Couplings: For interior piping, transition couplings used to connect pipes with small differences in outside diameter shall be

a. Dresser, Style 62; Smith-Blair, 413; PowerSeal Model 3501; Romac RC501; or equal, with low alloy steel bolts and nuts where connecting to ductile iron pipe.

5. Expansion Joints: Expansion joints shall be spool-type, hand-laid elastomer bellows expansion joints and shall be reinforced, wide arch type with 125-pound ANSI flanged ends, split galvanized steel flange retaining rings to ASTM A-536, control rods to protect the bellows from overextension and compression sleeves to protect the bellows from compression. The bellows arch shall be nonfilled and lined with a Buna-N, nitrile, or butyl. Lining material shall be NSF-61 listed for potable water service. Burst pressure shall be four times the working pressure rating. Rated compression, elongation and lateral deflection and minimum working pressure ratings shall be equal to the published catalog data for Red Valve expansion joints as listed above. Flange bolt set for elastomer bellows expansion joints shall include washers over the split steel retaining rings to help provide a leak-proof joint under hydrostatic test pressures.
   a. Red Valve, Style J-1W or Mercer Flexmore, Style 450.

6. Dielectric Pipe Fittings and Unions: When connecting piping system of dissimilar materials provide dielectric fittings and unions manufactured by, with gaskets suitable for the intended service. Provide dielectric flanges with insulated bolting at 3” and larger piping.
   a. Watts, Series 3000

2.02 PRESSURE GAUGES

A. Where indicated on the drawings, the Contractor shall tap pipelines and shall install 1/2 inch gauge cocks to receive 1/2 inch pressure gauge fittings. The fittings shall include a pet cock for air bleedoff located below the gauge and a shutoff valve to allow removal of the gauge. The gauges shall be Ashcroft Model 1259 or Model 1279, Weksler, or equal. Gauges shall have 4-1/2” diameter dial, black phenolic solid front case, 1/2" NPT lower stainless steel connection, 0.5% accuracy, glycerine filled and overload safety stop. The gauges shall have diaphragm seals and the seals shall be Ashcroft Type 500 or equal. All gauges on pump discharge lines shall have stainless steel impulse dampeners, Ashcroft 50-1106S or equal.

B. Gauges installed on the suction side of a pump shall be a combination vacuum, pressure gauge.

2.03 SLAB, FLOOR, WALL, AND ROOF PENETRATIONS

A. All piping penetrations of slabs, floors, walls, and roofs shall be cast ductile iron wall pipes with thrust collars, unless noted otherwise on the drawings.

B. Pipe Sleeves with Modular Link Seal, where called for on the drawings:
   1. Where specifically noted on drawings, provide steel pipe sleeve where pipe passes through concrete or masonry walls, floors, slabs, and roofs which are to be watertight and where shown on the Drawings. Pipe sleeves shall be schedule 40 pipe.

2. All pipe sleeves shall be provided with thrust collars. Thrust collars shall be fabricated of steel and shall be continuously welded (both sides) to the pipe sleeve. All welds shall be done in the pipe manufacturer's shop by qualified welder.

3. The annular space between pipes and sleeves shall be watertight. The joint shall be sealed by a modular mechanical unit consisting of interlocking synthetic rubber links shaped to continuously fill the annular space between the pipe and sleeve. For non-immersion service, the interconnected rubber links shall be assembled with zinc phosphate-plated steel bolts and nuts and steel pressure plates under each bolt head and nut to prevent the nut from turning when the bolt is tightened. For immersion service, the links shall be assembled with stainless steel bolts, nuts, and pressure plates. Tightening of the bolts shall cause the rubber sealing links to expand, resulting in a watertight seal between the pipe and sleeve opening. Unless noted otherwise, for applications exposed to groundwater and drinking water, the seal elements shall be EPDM; for exposure to wastewater and stormwater, the seal elements shall ne Nitrile; and for exposure to operating temperatures above 120 degrees F, such as on air piping, the seal elements shall be Silicone rubber. The installed closure shall provide electrical isolation of the pipe from the sleeve. Closures shall be sized according to manufacturer's instructions for the size of pipes shown on the Drawings. Annular mechanical seals shall be Link Seal by Thunderline Corporation, or equal.

4. It shall be the Contractor's sole responsibility to coordinate the pipe sleeve and the annular seal sizes.

PART 3 EXECUTION

3.01 INSTALLATION

A. Install the equipment as recommended by the manufacturer and in the locations specified in the drawings.

END OF SECTION 40 05 06

PART 1 GENERAL

1.01 DESCRIPTION OF THE WORK

A. This section covers the requirements to furnish and install sleeves, supports, hangers, anchors and seals for piping and equipment under this contract.

1.02 RELATED WORK

A. Specified Elsewhere:
   1. Division 03 - Concrete
   2. Section 40 05 24 - Fabricated Welded Steel Pipe and Fittings

1.03 REFERENCE TO STANDARDS

A. Standards: Manufacturer's Standardization Society of the Valve and Fittings Industry, M.S.S.:
   1. SP 58: Pipe Hangers and Supports - Materials, Design and Manufacture.
   2. SP 69: Pipe Hangers and Supports - Selection and Application.

1.04 QUALITY ASSURANCE

A. Manufacturer:
   1. To the greatest extent possible obtain materials from only one manufacturer, even though several may be specified as acceptable manufacturers.

B. Supplier:
   1. Furnishing of the materials only to a recognized material supplier who has been furnishing materials in the same area as project for a period of not less than 2 years.

C. Installer:
   1. Subcontract installation of materials to a company specializing in the installation in performing work of this section with a minimum 5 years experience. Assign work to experienced tradesmen in compliance with trade union jurisdictions.

D. Installation:
   1. Perform work in accordance with State and local building codes.
   2. Perform work in accordance with industry standards.

1.05 DELIVERY, STORAGE AND HANDLING

A. Deliver products wrapped in factory-fabricated fiberboard type containers.

B. Do not install damaged products; replace and return damaged units to manufacturer.

C. Store hangers, supports and anchors in clean, dry space. Store in original cartons and protect from dirt, physical damage and construction traffic.

1.06 SUBMITTALS

A. Submit in accordance with Division 1, Section 01 33 00 – Submittal Procedures.

B. Shop Drawings: Locate all piping, and equipment supports with static and dynamic load on each. Locate all sleeving for mechanical equipment. Locate all flashing for mechanical equipment.

C. Product Data: Provide schedule of sealants with type and location for each.

PART 2 PRODUCTS

2.01 PIPING HANGERS AND SUPPORTS

A. Suspension Hangers:
1. Acceptable Manufacturers:

	2½-Inch IPS and Smaller	3-inch IPS and Greater	Copper/Brass Piping, All Sizes
a. Grinnell:	Fig. 65	Fig. 260	Fig. CT 65
b. B-Line:	Fig. 3104	Fig. 3100	Fig. 3104 CT
c. Persing:	Fig. 230	Fig. 200	Fig. 220 CT

2. Adjustable wrought steel clevis type. Copper plated for all hangers in direct contact with copper lines.

B. Adjustable steel yoke pipe roll:
1. Acceptable Manufacturers:
   a. Grinnell Fig. 171/181
   b. B-Line Fig. B3110/B3114
   c. Persing Fig. 322/324

C. Pipe Covering Protection Sleeves for Insulated Pipe:
1. Acceptable Manufacturers:
   a. Grinnell Fig. 167 Series
   b. B-Line Fig. 35L Series
   c. Persing Fig. 400 Series

D. Pipe Covering Protection Saddles for Insulated Pipe:
   1. Acceptable Manufacturers:
      a. Grinnell Fig. 160 Series
      b. B-Line Fig. 3160 Series
      c. Persing Fig. 400 Series

E. Pipe Protection/Thermal Insulation Hanger Shields for Insulated Pipe.
   1. Acceptable Manufacturers:
      a. B-Line Fig. B3195 Series
      b. Insul-shield
      c. Pipe Shields
      d. Uni-grip

F. Hanger Rods, Galvanized All Thread Rod; ASTM A36:
   Hanger rod sizes:

Pipe Size	Hanger Rod Diameter
2-inch and smaller	⅜-inch
2½-inch to 3½-inch	½-inch
4-inch to 5-inch	⅝-inch
6-inch	⅝-inch
8-inch	⅝-inch
Over 8-inch	As per Hanger Manufacturer recommendations

F. Wall Brackets:
   1. Acceptable Manufacturers:
      a. Grinnell Fig. 194/195/196/ Clip Fig. 193
      b. B-Line Fig. B3063/B3068/B3067 / Clip Fig. B3063 CP
      c. Persing Fig. 153/151/153 / Clip Fig. 153 C

   2. Welded steel with capacity as required.

G. Horizontal Pipe Slide Supports:
   1. Acceptable Manufacturers:
      a. Grinnell 257 Type 3
      b. Fluorogold FPS-IT
      c. TOBO TPS-100

   2. Pipe shall be fixed in place by metal hold down clamps anchored to formed steel channels capped with 1/8 inch Teflon sheet. The Teflon shall be securely fastened to the channel by metal screws or by chemical bond or both.
   3. Hold down clamps shall be the "one-piece" type. Hold down clamps shall be sized large enough to allow the pipe to slip in the axial direction thereby allowing for expansion or contraction of the pipe.
   4. All metal parts shall be galvanized by the manufacturer and prepared and painted by the plumbing Contractor after assembly. All nuts and bolts shall be cadmium plated.

H. Preformed Metal Framing Channels:
1. Acceptable Manufacturers:
a. Unistrut
b. Superstrut
c. B-Line

2. Continuous slotted steel framing channel in gauge and size for capacities required complete with the matching fittings, nuts, bolts and hangers as shown on the drawings.

I. Auxiliary Steel Angle and/or Pipe:
1. Auxiliary steel angle, channels T-sections for the support of piping or equipment shall be AISI-SAE 1020 low carbon steel or harder. Where piping is used for supports, it shall be Schedule 40 black steel.

J. Pipe Support Bearing Pad:
1. Each pipe saddle shall receive bearing pads. They shall be 3/16-inch thick and cover 100% of the contact area between the pipe and the pipe saddle. See pipe support details.
2. Each pipe anchor strap shall receive bearing pads. The bearing pad shall be 3/32-inch thick and cover 100% of the contact area between the pipe and anchor strap. See pipe support details.
3. The coefficient of friction shall average 0.06 under a compressive load of 2000 psi. The compressive creep shall be a maximum of 2% at 2000 psi at 70°F. The pads shall be a blend of materials composed of virgin (unreprocessed) PTFE resin tested per ASTM D1457 and reinforcing agents including milled glass fibers. The blended material shall have the following physical properties: tensile strength, 2200 psi; elongation, 225%; specific gravity, 2.17 to 2.22.
4. The bearing pads shall be as manufactured by Con-Serv, Inc., Georgetown, S.C., Model: CON-SLIDE Type CSA or approved equal.

2.04 SEALS, SAFING AND FLASHING

A. Wall and Floor Seals: Wall and floor seals shall be modular mechanical type with interlocking synthetic rubber links. Manufacturers/Models:

1.	Thunderline	No. 300, 400, 500 "Link-Seal"
2.	Clow	No. F-1430, F-1435
3.	Tyler	Nos. F-796, F-797

B. Roof Flashing:
1. Where plumbing vent penetrates roof and flashings must be attached to pipe, the flashing shall be 24 gauge galvanized metal.

C. Sealant:
1. Acceptable Manufacturers:

a.	General Electric	Silicone Construction 1200
b.	DAP	One Part Acrylic Sealant
c.	Dow Corning	Silicone Rubber Sealant

2. Caulking for exterior flashing shall be silicone or butyl rubber.

3. Caulking shall be capable of weathering in temperature ranging from -30 degrees F to 180 degrees F and in direct sunlight maintaining its elasticity and its adherence to the material on which it was applied.
4. Caulking color shall be black or where visible shall be chosen by the Construction Coordinator.

PART 3 EXECUTION

3.01 HANGERS AND SUPPORTS

A. Hangers in General:

1. All piping shall be supported as specified herein. All structural steel, hanger rods, turnbuckles, beam clamps, angle iron clips, inserts, brackets, floor bases, supports and bracing shall be provided.
2. Provide supports, where pipe changes direction, adjacent to flanged valves, strainers, and fittings and at equipment.
3. Horizontal suspended piping shall be supported with adjustable hanger assemblies. Provide the specified clevis type with weight bearing insulation and protection shield. All hanger rods shall have enough length and threaded length to allow adjustment.
4. Vertical pipe runs shall be supported and laterally braced at every floor level. Support vertical pipe with riser clamps installed below hubs, couplings or lugs, welded to the pipe.
5. Piping shall be supported as follows:

	Maximum Spacing	
Pipe Sizes	Ferrous Pipe	Copper Tubing
2-inch thru 1-inch	6-feet	5-feet
1¼-inch thru 2-inch	8-feet	8-feet
2½-inch thru 3-inch	12-feet	8-feet
4-inch thru 6-inch	14-feet	8-feet
8-inch thru 14-inch	20-feet	---
Over 14-inch	As per Pipe Manufacturers Recommendations	

6. Piping shall be properly supported from hangers securely attached to the building construction using clamps for steel construction, anchors for concrete construction or lag screws or bolts for wood construction or as otherwise detailed on drawings or specified.
7. All piping shall be supported in a manner to minimize undesirable stress on bodies of valves and other fittings.
8. All piping shall be supported from walls on brackets, directly from the floor above, or from auxiliary steel. Do not support pipe from ceilings.
9. No cutting, drilling, welding or burning on any structural steel member shall be allowed. Power driven studs and welding studs shall not be allowed.
10. All bolts and threaded rods shall be used with double nut and washer or single nut, washer, and lock washer wherever a single unsecured nut could work loose and allow either threaded rod or supported piping to drop.
11. Cast in place concrete anchors shall be positioned and secured to reinforcing.
12. All Pipe hangers shall be cleaned and painted with rust resistant paint before installation.

B. All pipe saddles and pipe anchor straps shall receive slide bearing pads that cover 100% of the contact area between the pipe and the saddle. All surfaces of the bearing pad shall be maintained clean and free from grit, dirt or grease. The bearing pads bearing slide surface must be protected from all foreign matter and must not be exposed to direct sunlight. Do not scratch or mar surfaces.

3.02 PIPE MOVEMENT

A. Design and install hangers to resist disengagement from movement of supported pipe.

B. Provide allowances for expansion and contraction of installed piping. Install piping in a manner that will not cause more than negligible stress nor cause leaks due to thermal expansion and contraction. Movement of pipe shall not result in noise generation.

3.05 CUTTING, DRILLING AND PATCHING

A. Contractor shall do all cutting and drilling that is required in order that its work may be properly installed and it shall do all patching and repairing required to restore all surfaces to their original condition.

B. Where holes are required, these shall be cut in a careful manner and the openings kept to an absolute minimum.

C. The cutting and drilling into structural members or slabs may be accomplished only upon the prior written concurrence of the Construction Coordinator.

D. Openings in a slab on grade shall be made by scoring with a concrete saw followed by a chiseled clean break. Such floor openings shall be restored using fully compacted granular subgrade and concrete bonded to the vertical pipe installed through the floor. No sleeve is to be placed in such case, and concrete shall be sloped upward around the pipe to prevent water ponding at that point.

E. All patching and repairing shall be done by experienced men in the particular trades to which the respective kinds of work belong; and shall be neatly made, restoring the area to its original condition to the satisfaction of the Construction Coordinator.

3.06 PRIMING

A. Prime coat exposed steel hangers and supports.

3.07 SLEEVES, SEALS, SAFING, FLASHING AND SEALANT

A. Wall and Floor Seals and Sleeves:
   1. Setting:
      a. Set sleeves in position in advance of concrete work.
      b. Provide suitable reinforcing around sleeves.

   2. Sleeves shall be cut the same length as the thickness of the walls and 1½-

inch longer than thickness of floors. 1½-inch shall extend above the floor.

3. Cuts should be square or round and ground smooth.
4. In outside walls and in floors the annular space between the pipe and the sleeves shall be sealed with a flexible link seal as per this Specification.
5. In interior walls the annular space between the pipe and the sleeve shall be sealed tight with oakum.
6. Sleeves shall be sized with 2-inch of open space between outside pipe and inside of sleeve unless otherwise specified in individual sections.
7. Cuts between sleeves and walls or floors shall be patched with mortar to the approval of the Construction Coordinator.

B. Flashing:

1. Flashing for vent piping shall be soldered or lapped over vent piping and feather out on top of roof. Flashing should be sealed to roof with roofing pitch.
2. Wherever curbs or chimneys penetrate sloped roofs such that the joint formed by the curb or chimney and the roof is a straight line parallel to the ridge of the roof a cricket flashing shall be installed. Thus flashing shall be sloped towards the sides of the curb or chimney at a minimum of 4/12 pitch such that no water may collect above the chimney or curb on the roof surface.
3. Flashing shall extend at least 8-inch underneath lapping roofing. On sloped roofs the lower flashing shall extend 8-inch over the top of the roofing and be secured with nails into wood, screws into sheet metal and anchors into concrete.
4. Nails, screws, anchor, and exposed flashing edges shall be covered and sealed with sealant as listed in this Specification.
5. Flashing attached to sheet metal shall be riveted into place with beads of sealant applied between the two metal surfaces and along the exposed edges.
6. All fasteners shall be of the same material as the flashing.
7. Caulking sealant shall not be used to fill gaps in flashing greater than ¼-inch. Gaps of this size shall be covered by flashing material, fastened and sealed into place.
8. Flashing, sealant and fasteners shall be painted a uniform color as per Construction Coordinator.

3.09 ADJUSTING AND CLEANING

A. Adjust hangers and supports and place grout as required under supports to bring piping and equipment to proper levels and elevations.

END OF SECTION 40 05 07

PART 1 GENERAL

1.01 SECTION INCLUDES

A. This Section covers the work necessary to furnish and install complete, the fabricated welded steel piping, 14-inch diameter and larger process piping specified herein, and as specified further in Section 40 05 00 – Common Work Results for Process Interconnections for installation in exposed interior locations.

1.02 GENERAL

A. See Section 40 05 00 – Common Work Results for Process Interconnections, which contains information and requirements that apply to the work specified herein and are mandatory for this project.

1.03 ALTERNATES - NOT USED

1.04 REFERENCE TO STANDARDS

A. ANSI/AWWA C207, AWWA Standard for Steel Pipe Flanges for Waterworks Service - Sizes 4-inch through 144-inch (100 mm through 3600 mm).

B. ASME - Boiler and Pressure Vessel Codes - Section IX.

C. ASME B31.1 - Code for Pressure Piping, Power Piping,

D. ASTM A193, Standard Specification for Alloy-Steel and Stainless Steel Bolting Materials for High-Temperature Service.

E. ASTM A194, Standard Specification for Carbon and Alloy Steel Nuts for Bolts for High-Pressure and High-Temperature Service.

F. ASTM A307 - Standard Specification for Carbon Steel Bolts and Studs, 60,000 psi Tensile Strength.

G. ASTM A563 - Standard Specification for Carbon and Alloy Steel Nuts.

1.05 SUBMITTALS

A. Submittals shall be made in accordance with Section 01 33 00 – Submittal Procedures and Section 40 05 00 – Common Work Results for Process Interconnections. In addition, the following specific information shall be provided prior to the start of work:

1. Procedure specifications and qualification records of all welding procedures for all pipe and associated structural welding to be performed under this Section, in accordance with Section IX of the ASME Boiler and Pressure

Vessel Code except as modified by the code listed in Code Requirements of this Section.

2. Welders qualifications shall be submitted for each individual welder scheduled to execute welding work.

1.06 CODE REQUIREMENTS

A. Meet the requirements of the ASME Code for Pressure Piping B31.1, Power Piping, hereinafter referred to as the Piping Code.

1.07 QUALITY ASSURANCE

A. A system of quality control is required of the manufacturer to assure and document that the materials furnished are manufactured and erected to the standards and conditions specified herein.

1.08 WARRANTY

A. Manufacturer shall provide a written guarantee for all materials and workmanship extending one (1) year after startup. All materials, equipment, and workmanship furnished under these Specifications shall be free from all defects in material or workmanship.

1.09 MANUFACTURER'S QUALIFICATION

A. Manufacturer shall submit a document describing his quality control procedure and system.

B. Manufacturer shall have been in the design and manufacture of the materials for five (5) years minimum.

1.10 DELIVERY, STORAGE AND HANDLING

A. In addition to the requirements in Section 01 60 00 – Product Requirements, the ends of pipe shall be covered during shipping.

PART 2 PRODUCTS

2.01 PIPE

A. Schedule 10S type 304L Stainless Steel meeting one of the following ASTM standards as per AWWA Standards (2015).

1. ASTM A36
2. ASTM A139
3. ASTM A283
4. ASTM A516
5. ASTM A572
6. ASTM A1011
7. ASTM A1018

Pipe shall be designed and fabricated in accordance with the requirements of AWWA C200 and the ASTM standards referenced therein. Pipe sizes shown in these Documents shall be for nominal outside diameter, unless otherwise noted, and shall conform to the requirements of ANSI B36.10.

2.02 JOINTS

A. Butt-welded or flanged, as specified herein.

2.03 FITTINGS - BUTT-WELDING TYPE

A. Carbon steel, to match pipe wall thickness, fabricated from the pipe material in accordance with the dimensions shown in AWWA C208.

B. Fabricate all bends as four or five-piece fittings.

2.04 BRANCH CONNECTIONS

A. Tees, reducing tees, or laterals as specified in this Section, Article 2.03, FITTINGS, paragraph A.

2.05 FLANGES

A. Forged steel, hub type flanges, conforming to ANSI/AWWA C207 for Class D and E Standard Steel-Hub flanges.

B. Steel-ring, plate type flanges, conforming to ANSI/AWWA C207 for Class D and E Standard Steel-Ring flanges.

1. All steel-ring, plate type flanges shall be fabricated with an inside diameter not greater than ⅛-inch larger than the associated pipe outside diameter.

2.06 BOLTING

A. ANSI/AWWA Class D flanges: Provide carbon steel, finished, hot-dipped galvanized, ASTM A307, Grade A hex head bolts and ASTM A563, Grade A hex head nuts.

B. ANSI/AWWA Class E flanges: Provide carbon steel, finished, hot-dipped galvanized, ASTM A193, Grade B7 hex head bolts and ASTM A194, Grade 2H hex head nuts.

2.07 GASKETS

A. The following shall apply to joints between steel flanges and joints between one steel flange and one ductile or cast iron flange. Flange gaskets shall meet NSF 61. Unless noted otherwise, gaskets for shall be single piece (non-segmented), 1/8-inch thick conforming to AWWA C207. Gasket material shall be free from corrosive alkali or acid ingredients and suitable for the intended purpose. Gaskets shall be full face type. Gaskets with annular rings shall be full face, specially designed gaskets to improve joint performance, such as Toruseal as manufactured by American Cast

Iron Pipe Company, or equal. Gasket shall be rated for 350 psi for 24-inch diameter and smaller and 250 psi for diameters larger than 24 inches.

2.08 COVERED WELDING ELECTRODES

A. As specified in the welding procedure.

2.09 WELDING ROD AND BARE ELECTRODES

A. As specified in this Section, PART 3 EXECUTION.

2.10 INSULATION

A. Influent and effluent riser pipe shall be insulated with rigid thermal fiberglass and jacket from the ground level to bottom of the bowl. Stell riser pipe shall be coated on interior and exterior.

PART 3 EXECUTION

3.01 WELDING

A. General: In accordance with the latest editions of Section IX, ASME Boiler and Pressure Vessel Code except as modified by the piping code listed in CODE REQUIREMENTS of this section and the Piping Code.

B. Welding Procedure Specifications:
   1. Qualify all welding procedure specifications prior to fabrication in accordance with the ASME Boiler and Pressure Vessel Code, Section IX except as modified by the code listed in CODE REQUIREMENTS of this Section.
   2. Identify all welding procedure specifications by number and reference the procedure number on all fabrication Drawings.

C. Welding and Welding Operators:
   1. Qualify all welders and welding operators prior to fabrication in accordance with the ASME Boiler and Pressure Vessel Code, Section IX except as modified by the code listed in CODE REQUIREMENTS of this Section.
   2. Include qualifications for all welding positions to be employed in the fabrication.
   3. Make qualification records available for review by the Engineer.

D. Materials:
   1. Use welding products within the limits recommended by their manufacturers.
   2. Keep electrodes, filler wires, and fluxes clean, dry, and properly stored according to manufacturer's recommendations. Do not use electrodes, filler wires, or fluxes that are damp, greasy, or oxidized.
   3. Do not use backing rings
   4. Consumable inserts may be used if included in the qualified welding, procedure specification. Match the chemistry of the consumable insert with the base metal and weld metal chemistry.

E. Weld Identification:
   1. Assign each qualified welder or welding operator an individual identification

number or symbol.

2. Permanently mark each pressure weld with the identification of the welder or welding operator who performed the weld. If more than one welder or welding operator welds a joint, each shall apply their identification in a manner to indicate the part of the weld they completed.

F. Procedure:

1. Clean surfaces to be welded free of paint, oil, dirt, scale, oxides, and other material detrimental to welding. Clean in a manner that will not lead to contamination of the weld or adjoining base metal.
2. No welding shall be performed if there is any rain, snow, sleet, or high wind in contact with the weld area or if the ambient temperature is below 32 degrees F.
3. If the ambient temperature is less than 32 degrees F, local preheating to a temperature warm to the hand is required.
4. Tack Welds:
   a. Remove completely if not made by a qualified welder using the same procedure as for the completed weld.
   b. If not removed, make tack weld with an electrode the same as, or equivalent to, the electrode to be used for the first weld pass.
   c. Completely remove cracked tack welds.
5. Clean each layer of deposited weld metal with a power-driven wire brush, prior to depositing each subsequent layer of weld metal, including the final pass.
6. Chip or grind out surface defects which will affect the soundness of the weld.
7. Weld Passes:
   a. 4-inch and Under Pipe: Minimum of a full root and second pass.
   b. 6-inch through 24-inch Pipe: Minimum of three weld passes using the specified electrode.
   c. Greater Than 24-inch Pipe: Minimum of three weld passes using the specified electrode.
8. Welds: Welds shall be free of cracks, incomplete penetration, weld undercutting, excessive weld reinforcement, porosity, slag inclusions, and other defects in excess of the limits prescribed in the Piping Code.
9. Branch Connections: Branch connections shall fit and groove-weld in accordance with the details described and shown in the Piping Code.
10. Do not field weld epoxy-lined and/or coated pipe except as specifically approved by the Engineer.

3.02 FABRICATION

A. End Preparation:

1. Machine shaping of pipe ends is the preferred method.
2. Oxygen or arc cutting is acceptable only if the cut is smooth and true and all slag is removed either by chipping or grinding.
3. Beveled ends for butt welding shall meet the requirements of ANSI B16.25.
4. Grooved Ends: Meet the requirements of the grooved end coupling and fitting manufacturer.

B. Cleaning:
   1. Before Welding: Surfaces shall be clean and free of paints, and coatings, oil, rust, scale, slag, or other material detrimental to welding.
   2. After Welding: After completion of shop or field fabrication and after erection, clean all piping inside and outside to remove all loose scale, weld spatter, dirt, loose debris, and foreign material.

C. Alignment and Spacing:
   1. Align ends to be joined within existing commercial tolerances on diameters, wall thicknesses, and out-of-roundness.
   2. Root Opening of the joint shall be as stated in the welding procedure specification.

3.03 SUPPORTS AND HANGERS

A. See Section 40 05 07 – Sleeves, Supports, Hangers, Anchors, and Seals.

3.04 CORROSION PROTECTION

A. See Section 40 05 00 – Common Work Results for Process Interconnections.

3.05 EXAMINATION, INSPECTION, AND TESTING

A. Required Examinations:
   1. Perform examinations in accordance with the Piping Code.
   2. Perform examinations for every pipe thickness and for each welding procedure, progressively, for all piping covered by this Section.
   3. Examine at least one of each type and position of weld made by each welder or welding operator.
   4. For each weld found to be defective under the acceptance standards or limitations on imperfections contained in the Piping Code, examine two additional welds made by the same welder that produced the defective weld. Such additional examinations are in addition to the minimum required above. Examine, progressively, two additional welds for each examination found to be unsatisfactory.

B. Inspection: Provide access to the Engineer for inspection of all shop and field work and review of all records of examinations.

C. Pressure Tests:
   1. Piping: Hydrostatically or pneumatically test at the pressure listed in the Piping Schedule in accordance with the Piping Code.
   2. Piping Pressure Test Procedures: As specified in Section 33 14 16 – Public Water Utility Distribution Piping.

END OF SECTION 40 05 24

DIVISION 40 – PROCESS INTERCONNECTIONS
Section 40 05 51 – General Requirements for Valves and Valve Actuators

PART 1 GENERAL

1.01 SECTION INCLUDES

A. This section includes the general requirements for all valves and actuators for process piping and equipment under this contract.

B. Related Sections:
1. Section 40 05 53.2 – Electronic Control Valve

B. The valve and actuator schedule, included in the contract drawings, is to be used in conjunction with this section.

1.02 GENERAL

A. Like items of equipment provided hereunder, although for different services, shall be the end products of one manufacturer in order to achieve standardization for appearance, operation, maintenance, spare parts, and manufacturers service, unless specifically specified otherwise.

B. See Conditions of the Contract and Division 1 - General Requirements, which contain information and requirements that apply to the work specified herein and are mandatory for this project.

1.03 QUALIFICATIONS

A. The valves and valve actuators supplied under the related sections shall be manufactured by firms that have at least ten (10) years experience in the design manufacturing and testing similar products.

1.04 REGULATORY REQUIREMENTS

A. All equipment furnished, and equipment installation, under this section shall meet requirements of the Federal Occupation Safety and Health Act of 1970 (OSHA), latest edition.

1.05 QUALITY ASSURANCE

A. The manufacturer shall have established an on-going program of quality assurance and shall, upon request, provide auditable records to the Owner and/or Engineer of quality control documentation for the specified materials and equipment through it's manufacturing process.

1.06 SUBMITTALS

A. Submittals shall be made in accordance and under provisions of Section 01 33 00 – Submittal Procedures.

B. Submittals for valves, valve actuators and associated equipment shall be as specified in this and the referenced sections.

C. Submit product information for valve name tags.

D. Submit evidence of Quality Assurance Program.

E. Submit certification that the manufacturer meets the applicable manufacturer's qualifications stated in Part 1 Paragraph 1.03 of this section.

F. All types of valves shall be submitted for review. Sufficient information shall be presented to allow proper evaluation. Complete dimensional information is required. Provide catalog data.

G. The submittals shall reference the plan sheets and indicate the intended use for the valve submitted.

H. Submit certification of NSF standard where required herein.

1.07 DELIVERY, STORAGE AND HANDLING

A. All valves/actuator assemblies shall be delivered in the manufacturer's cartons and shall be stored inside, away from construction until just prior to installation. Under no circumstances shall the valves/actuator assemblies be stored outdoors or subject to the weather.

B. To prevent damage and eliminate dirt and moisture from entering valves, the manufacturer shall be provided and installed end caps. The end caps shall not be removed until installation.

C. Maintain manufacturer's coatings at all times.

1.08 MANUFACTURER'S SERVICE

A. If required by the related section, a manufacturer's factory representative for the equipment specified shall be present at the jobsite for installation assistance, inspection and certification of the installation, equipment testing, startup assistance, and training of Owner's personnel.

1.09 MAINTENANCE SERVICE (WARRANTY)

A. The Manufacturer/Contractor shall warrant the equipment to be free of material or workmanship defects for a period of one (1) year from the date of substantial completion established by the Owner.

PART 2 PRODUCTS

2.01 PRODUCT DESCRIPTION, MANUFACTURER, MODEL

A. The product description, manufacturer and model number for the valves and valve actuators furnished, will be specified in the related sections.

B. Valves shall meet NSF 61 and 372 standard where applicable.

2.02 VALVE COMPATIBILITY

A. For purpose of standardization of spare parts as well as familiarity with repair techniques, all valves and manual valve actuators of a similar type (i.e.: ball; butterfly; gate; etc.) shall be made by a single manufacturer.

2.03 VALVE MARKINGS

A. The manufacturer's name and pressure rating shall be clearly marked on the outside of the valve body.

2.04 VALVE AND ACTUATOR NAME TAGS

A. The assembled valves and valve actuators shall be furnished with name tags. The tags shall be 3-inch around with a white background and black lettering. The tag shall be minimum 1/16" thick 2ply Briply plastic. The valve tag designation shall be engraved with a minimum ⅜-inch high block lettering. The tags shall be attached with 1/16-inch diameter type 304 7x7 SS cable, secured with stainless steel oval sleeves. The tag designation is given on the process and instrumentation diagrams, included with the contract drawings.

B. Manufacturer/Supplier:
   1. Brimar Industries, Inc.
   2. Or equal.

2.05 END CAPS

A. The manufacturer shall provide and install protective end caps on each valve.

2.06 LIMIT SWITCHES

A. General - Certain valves are required to be provided with limit switches for remote position indication. The limit switches and associated attachments shall be factory installed and set by the valve manufacturer, unless specifically indicated otherwise. Limit switches shall be double-pole, double-throw (DPDT) type, heavy duty, silver plated, adjustable cam operated and rated at 5 amps at 120 volts ac.

B. Type A - Two (2) limit switches, one (1) for the open and one (1) for the closed position.

C. Type B - Four (4) limit switches, two (2) for the open and two (2) for the closed position.

2.07 VALVE BOXES – NOT USED

2.08 EXTENSION STEMS FOR VALVE OPERATORS – NOT USED

2.09 EXTENSION BONNETS FOR VALVE OPERATORS - NOT USED

2.10 FLOOR STANDS - NOT USED

2.11 EXTENSION STEMS/TORQUE TUBES - NOT USED

2.12 STEM GUIDES – NOT USED

PART 3 EXECUTION

3.01 VALVE ACTUATORS

A. Unless otherwise specified on the drawings, or referenced sections, valve actuators shall be furnished, and factory installed by the valve manufacturer.

3.02 VALVE INSTALLATION

A. Bolt holes of flanged valves shall straddle the vertical centerline of the pipe run. Prior to installing flanged valves, the flange faces shall be thoroughly cleaned. After cleaning, insert gasket and bolts, and tighten the nuts progressively and uniformly. If flanges leak under pressure, loosen or remove the nuts and bolts, reseat or replace the gasket, retighten and/or reinstall the nuts and bolts, and retest the joints. Joints shall be watertight at test pressures before acceptance.

B. Thoroughly clean threads of screwed joints by wire brushing, swabbing, or other approved methods. Apply approved joint compound to threads prior to making joints. Joints shall be watertight at test pressures before acceptance.

3.03 VALVE STEM ORIENTATION (unless otherwise indicated on the drawings)

A. All valves installed in horizontal runs of pipe having centerline elevations 4-feet 6-inches or less above the finish floor shall be installed with their operating stems vertical.

B. Valves installed in horizontal runs of pipe having centerline elevations greater than 4-feet 6-inches above the finish floor shall be installed with their operating stems horizontal.

C. If adjacent piping prohibits the stem orientation listed above, the stems shall be installed above the valve horizontal centerline as close to horizontal as possible.

D. Valves installed in vertical runs of pipe shall have their operating stems orientated to facilitate the most practicable operation.

F. Inverted operating stems will not be permitted unless specifically approved by the Engineer.

3.04 VALVE LOCATIONS

A. Locate valves in accessible locations. Locate valves so that separate supports can be provided and installed where necessary.

B. Provide and install gate valves for shut-off and isolating service on equipment, vertical risers and individual systems.

C. Provide and install drain valves at main shut-off valves, low points of piping and all apparatus.

3.05 VALVE INSULATION

A. Where insulation is indicated, install extended stem valves and arrange in a proper manner to receive insulation.

3.06 RELIEF VALVE OUTLETS

A. All relief valve outlets shall be piped full size to adjacent floor drains or as shown on the drawings. Where no floor drains are provided, piping shall be piped straight down to within 3-inches of the floor.

3.07 TESTING

A. Valves shall be tested at the same time that the adjacent pipeline is tested. Joints and valve stem packing shall show no visible leakage under test. Tighten or repack stem packing, and repair joints that show signs of leaking prior to final acceptance. If there are any special parts of control systems or operators that might be damaged by the pipeline test, they shall be properly protected. The Contractor will be held responsible for any damage caused by the testing.

3.08 FINISHES

A. Buried Valves - Not Used

B. Valve Boxes – See Section 33 14 16 – Public Water Utility Distribution Piping

C. Non-Buried Valves
   1. Exterior/Nonsubmerged Surfaces - All exterior/nonsubmerged surfaces shall be primed and finished coated in accordance with Section 09 96 00 – High-Performance Coatings.
   2. Interior/Submerged Surfaces - All interior/submerged surfaces shall be shop primed and finished coated in accordance with Section 09 96 00 – High-Performance Coatings.

D. Actuators
   2. Electric Actuators - Electric actuator assemblies shall receive finishes that are in accordance with Section 40 05 53.2 – Electronic Control Valves.

END OF SECTION 40 05 51

DIVISION 40 – PROCESS INTERCONNECTIONS
Section 40 05 53 - Valves

PART 1 GENERAL

1.01 SUMMARY

A. This section covers the work necessary to provide and test process valves that are to be installed both above and below grade.

B. Related Sections:
   1. Section 09 96 00 – High Performance Coatings
   2. Section 13 21 10 – Composite Elevated Storage Tank
   3. Section 33 14 16 – Public Water Utility Distribution Piping
   4. Section 40 05 51 – General Requirements for Valves and Valve Actuators

1.02 SUBMITTALS

A. Submittals shall meet the requirements of Section 01 33 00 – Submittal Procedures.

B. All types of valves shall be submitted for review. Sufficient information shall be presented to allow proper evaluation. Complete dimensional information is required.

C. The submittals shall reference the plan sheets and indicate the intended use for the valve submitted.

1.03 QUALITY ASSURANCE

A. The contractor shall establish and maintain quality control of all valves and accessories on the project. To assure contract compliance, the contractor shall maintain records of his quality control efforts as listed below.

B. Check for damage to and defects in material.

C. Check for proper storage of valves and accessories and provide a systematic list of valves and accessories on site along with their location.

D. Check to see that all valves and accessories incorporated into the piping systems have been submitted and reviewed.

E. Coordinate valve submittal and piping submittals to assure correct dimensions, etc.

1.04 STORAGE AND HANDLING

A. Valves shall be stored on site on pallets and kept free from sand and other debris. Storage shall be such that no water is trapped in or on any part of the valves.

B. Valves shall not be lifted by the handwheel or operator. Manufacturer's recommendation for handling must be followed.

1.05 WARRANTY

A. The valves furnished and installed are subject to the one year warranty provisions of the General Conditions.

PART 2 PRODUCTS

2.01 EXTENSION STEMS

1. Buried Valves
   a. All buried valves shall have hot dipped galvanized steel extension stems keyed to the valve and the operating nut brought to within 6" of the finished grade.

2. Non-Buried Valves
   a. Extension stems shall be 304 stainless steel and extended to the top of concrete unless otherwise shown or specified on the drawings.

2.02 STEM GUIDES

A. Cast iron stem guide are required at a minimum of 5 ft. intervals on non-buried valves. Stem guides shall be as manufactured by Rodney Hunt, or equal.

2.03 OPERATORS

A. Chain Wheel

1. Valves manually operated (without an electric operator) with centerlines more than 6'-0" above a finished floor elevation shall be provided with galvanized chain wheel operators and guides and galvanized chain.

B. Lever

1. Valves manually operated with centerlines less than 6’-0” above a finished floor elevation and 8” or less in diameter shall have a lever operator provided with each valve. Manufacturer shall determine at which valve diameter the transition from lever to hand wheel occurs if different from stated within this specification section.

C. Hand wheel

1. Valves manually operated with centerlines less than 6’-0” above a finished floor elevation and greater than 8” in diameter shall have a hand wheel operator provided with each valve.

2.04 VALVE BOXES

A. Valve boxes shall be furnished with extension stems and actuating nut extended to within 6” of the top of the box. The valve box shall extend to the finished grade. A tee wrench shall be provided for the buried valves (1 per 6 valves). Buried and submerged valves shall be furnished with a completely sealed actuator.

B. Valve boxes shall be two-pieces, cast iron, and screw-type adjustable boxes with cover marked WATER. Box shall have 5-1/4” inside diameter. Box shall be 6” PVC shaft 6” adjustable trench adaptor (American Flow Control or approved equal. See Grain Valley Water Specification WAT-002.

2.05 VALVE AND ACTUATOR NAME TAGS

A. The assembled valves and valve actuators shall be furnished with name tags. The tags shall be 3-inch around with a white background and black lettering. The tag shall be minimum 1/16” thick 2ply Briply plastic. The valve tag designation shall be engraved with a minimum ⅜-inch high block lettering. The tags shall be attached with 1/16-inch diameter type 304 7x7 SS cable, secured with stainless steel oval sleeves. The tag designation is given on the process and instrumentation diagrams, included with the contract drawings.

B. Manufacturer/Supplier:
   1. Brimar Industries, Inc.
   2. Or equal.

2.06 BUTTERFLY VALVES

A. Type: Lug type and designed for air service up to 250°F, with lever actuator, 10 position positive latching lever operator on valves 8" and smaller and worm gear with hand wheels on valves 10" and larger, unless otherwise specified or shown on Drawings. Valves shall have position indication.
   1. Materials:

a.	Body	Ductile Iron, ASTM A536
b.	Seat	EPDM
c.	Disc	Ductile Iron, ASTM A536, Nickel Plated
d.	Shaft	Stainless Steel, ASTM A276, Type 316 (up to 200psi) Stainless Steel, ASTM A582, Type 416 (up to 250psi)
e.	O-Ring	EPDM

   2. Connections: threaded lugged compatible with class 125 ANSI B16.1 and class 150 ANSI B16.5.
   3. Standards: meets AWWA C504 for shaft diameter and body wall thickness.
   4. Installation: Unless necessary due to installation conditions and approved by the Engineer, the valves shall be installed with pipe diameters downstream and upstream as shown on the drawings, and the higher pressure on the seat side.
   5. Manufacturers: Dezurik BOS-US; Crane 44, Milliken. No substitutions will be considered.

2.07 CHECK VALVES

A. Type: 4 Inches and Larger for water service lever and weight swing check.

1. Materials:

a.	Body	Cast Iron
b.	Disc	Cast Iron
c.	Disc Ring	Bronze
d.	Seat Ring	Bronze
e.	Hinge Pin	SS

2. Connections: Flanged class 125 ANSI B16.1
3. Standards: AWWA C508 for 2-24 inch
4. Installation: per manufacturer recommendations
5. Manufacturers: Apco 250; GA Industries 220; M&H 159. No substitutions will be considered.

B. Type Valves 4 Inches and Larger (Vertical Swing Check)

1. Materials:

a.	Body	Ductile Iron
b.	Disc	One piece Buna-N (NBR), with integral O-ring sealing with metal and steel reinforcements, ASTM D2000-BG
c.	Disc Ring	Bronze
d.	Seat Ring	Bronze
e.	Hinge Pin	SS

2. Coatings - Fusion-bonded epoxy NSI/NSF 61
3. Disc Accelerator – Type 302 Stainless Steel, One piece, Enclosed, Field adjustable and replaceable. Non-slam closing.
4. Backflow actuator - Stainless steel screw type backflow actuator.

C. Connections - Flanged class 125 ANSI B16.1 and B16.10

D. Standards ANSI/AWA Standard C508.

E. Manufacturers - Val-Matic “Surgebuster” Swing-Flex series 500, or equal.

2.08 FLAP VALVES

A. Type

1. Circular port with offset single pivoted hinge flap valve
2. Constructed with 10 degree offset from vertical

B. Materials

a.	Body & Disc	Cast Iron ASTM A126, Class B
b.	Disc Ring	Bronze, B62
c.	Seat Ring	Bronze, B62
d.	Cotter Pin	Brass CDA360
e.	Hinge Pin	Stainless Steel

C. Connections

1. Flanged class 125

D. Manufacturers

1. Rodney Hunt Seried A-611
2. Clow Valve F-3012-T
3. Or Equal

2.09 GATE VALVES

A. Type: Resilient seated gate valve for a buried installation. The valve shall have a double disc, non-rising stem and open counterclockwise.

1. Materials:

a.	Body	Cast Iron
b.	Bonnet	Cast Iron
c.	Stem	Manganese Bronze
d.	Wedge	Cast Iron encapsulated in rubber

2. Connections: Mechanical joint for buried applications.
3. Standards: AWWA C509 Resilient Seated Gate Valves
4. Installation: Unless necessary due to installation conditions and approved by Engineer, the valves shall be installed per manufacturer recommendations.
5. Manufacturers: Mueller Company 2360, Clow model 2640, Pratt, No substitutions will be considered.

2.10 VALVE STEM ORIENTATION (UNLESS OTHERWISE INDICATED ON THE DRAWINGS)

A. All valves installed in horizontal runs of pipe having centerline elevations 4-feet 6-inches or less above the finish floor shall be installed with their operating stems vertical.

B. Valves installed in horizontal runs of pipe having centerline elevations greater than 4-feet 6-inches above the finish floor shall be installed with their operating stems horizontal.

C. If adjacent piping prohibits the stem orientation listed above, the stems shall be installed above the valve horizontal centerline as close to horizontal as possible.

D. Valves installed in vertical runs of pipe shall have their operating stems orientated to facilitate the most practicable operation.

E. Inverted operating stems will not be permitted unless specifically approved by the Engineer.

2.11 VALVE LOCATIONS

A. Locate valves in accessible locations. Locate valves so that separate supports can be provided and installed where necessary.

B. Provide and install valves for shut-off and isolating service on equipment, vertical risers and individual systems.

2.12 VALVE INSULATION

A. Where insulation is indicated, install extended stem valves and arrange in a proper manner to receive insulation.

2.13 TESTING

A. Valves shall be tested at the same time that the adjacent pipeline is tested. Joints and valve stem packing shall show no visible leakage under test. Tighten or repack stem packing, and repair joints that show signs of leaking prior to final acceptance. If there are any special parts of control systems or operators that might be damaged by the pipeline test, they shall be properly protected. The Contractor will be held responsible for any damage caused by the testing.

3.08 FINISHES

A. Buried Valves - Not Used

B. Valve Boxes – Not Used

C. Non-Buried Valves
1. Exterior/Nonsubmerged Surfaces - All exterior/nonsubmerged surfaces shall be primed and finished coated in accordance with Section 09 96 00 – High-Performance Coatings.
2. Interior/Submerged Surfaces - All interior/submerged surfaces shall be shop primed and finished coated in accordance with Section 09 96 00 – High-Performance Coatings.

D. Actuators
1. Electric Actuators - Electric actuator assemblies shall receive finishes that are in accordance with Section 40 05 53.2 – Electronic Control Valve.

END OF SECTION 40 05 53

INTRODUCTION

This specification covers the design, manufacture, and testing of 1 in. (25 mm) through 36 in. (900 mm) Electronic Control Valves

PART 1 - GENERAL

1. Standard products - use the same manufacturer for multiple units of same type.

2. Manufacturers shall price items under different subsections or sections separately.

PART 2 - PRODUCTS

2.01 ELECTRONIC CONTROL VALVES

A. FUNCTION

The Electronic Control Valve shall be capable of controlling downstream pressure, rate of flow, upstream pressure sustaining, tank level control (altitude and modulating), valve position, blending, pressure management or select combinations of any of these applications. Solenoid pilot controls equipped onto the electronic control valve are actuated by electrical signals received from SCADA. The solenoid pilots either add or relieve line pressure from the cover chamber of the control valve, causing it to open or close, ensuring the process variable signal follows the set-point command signal. This enables remote control over the electronic control valve operations. The process variable signal would come from a flow meter, pressure sensor or other rapid fluctuating process. The electric solenoid pilot controls can also be combined with hydraulic or electronic motorized pilot controls to create dual function, or fail-safe capability. Upon receiving the remote setpoint command from SCADA, the electron valve shall modulate and maintain the desired setpoint value. When the feedback signal deviates from the setpoint, the appropriate opening or closing solenoid on the valve will pulse. As the feedback signal approaches the setpoint, this on/off pulse time will gradually decrease to smoothly modulate the valve to setpoint. When the feedback signal is within a programmable dead band, the opening and closing solenoids will lock the cover and the electronic valve will maintain position.

B. MATERIALS

1. Material Specification for the Electronic Control Valves Main Valve as follows:

Component	Material
Body & Cover	Ductile Iron
Main Valve Trim	Stainless Steel
Seat	Stainless Steel
Stem, Nut and Spring	Stainless Steel
Seal Disc	Buna-N® Rubber
Diaphragm	Nylon Reinforced Buna-N® Rubber
Internal Trim Parts	Stainless Steel
End Detail	Flanged (1-1/2” – 36”)

	Threaded (1” – 3”) Grooved (1-1/2” – 8”)
Pressure Rating	Class 150 lb. (250psi Max.) Class 300 lb. (400psi Max.)
Temperature Range	Water to 180°F
Any other wetted metallic parts	Stainless Steel
Coating	Fusion Bonded Epoxy Coating (Interior and Exterior); ANSI / NSF 61 Approved AWWA coating specifications C116-03.
Optional Accessories	*Position Transmitter, Limit Switch, Opening & Closing Speed Controls, Check Feature, Isolation Valves, Gauges*.

C. MANUFACTURE

1. Main Valve:

   a. The main valve shall be hydraulically operated, single diaphragm actuated, globe or angle pattern. The valve shall consist of three major components; the body with seat installed, the cover with bearing installed and the diaphragm assembly. The diaphragm assembly shall be the only moving part and shall form a sealed chamber in the upper portion of the valve, separating the operating pressure from line pressure. Packing glands, stuffing boxes and/or rolling diaphragm technology will not be permitted and there shall be no pistons operating the main valve or pilot controls. No fabrication or welding shall be used in the manufacturing process. Y-pattern valves shall not be permitted. Main valve shall be certified by NSF/ANSI Standard 61 as a safe drinking water system component.

2. End Connections:

   a. End Connections for control valve shall be flanged per ASME/ANSI B16.42, Class 150 or Class 300 (1-1/2” thru 36”) or Threaded End Connections (1” thru 3”) or Grooved End Connections (1-1/2” thru 8”).

3. Main Valve Body:

   a. No separate chamber(s) below the diaphragm shall be allowed between the main valve cover and body. No fabrication or welding shall be used in the manufacturing process.

   b. The valve shall contain a resilient, synthetic rubber disc with a rectangular cross-section contained on three and one half sides by a disc retainer and forming a tight seal against a single removable seat insert. No O-ring type discs (circular, square, or quad type) shall be permitted as the seating surface. The disc guide shall be of the contoured type to permit smooth transition of flow and shall hold the discs firmly in place. The disc retainer shall be of a sturdy one-piece design capable of withstanding opening and closing shocks. It must have straight edge sides and a radius at the top edge to prevent excessive diaphragm wear as the diaphragm flexes across this surface. No hours-glass shaped disc retainers shall be permitted and no V-type or slotted-type disc guides shall be used.

c. The diaphragm assembly containing a non-magnetic stainless steel stem; of sufficient diameter to withstand high hydraulic pressures and shall be fully guided at both ends by a bearing in the main valve cover and an integral bearing in the valve seat. The valve seat shall be a solid, one-piece design and shall have a minimum five-degree taper on the seating surface for a positive, drip-tight shut off. No center guides shall be permitted. The stem shall be drilled and tapped in the cover end to receive and affix such accessories as may be deemed necessary. The diaphragm assembly shall be the only moving part and shall form a sealed chamber in the upper portion of the valve, separating the operating pressure from the line pressure. No bolts or cap screws shall be permitted for use in the construction of the diaphragm assembly.

d. The flexible, non-wicking, FDA approved diaphragm shall consist of nylon fabric bonded with synthetic rubber compatible with the operating fluid. The diaphragm's center hole for the main valve stem must be sealed by the vulcanized process or a rubber grommet sealing the center stem hole from the operating pressure. The diaphragm must withstand a Mullins Burst Test of a minimum of 600 X per layer of nylon fabric and shall be cycled tested 100,000 times to insure longevity. The diaphragm shall not be used as the seating surface. The diaphragm shall be fully supported in the valve body and cover by machined surfaces which support no less than one-half of the total surface area of the diaphragm in either the fully opened or fully closed position. Bellofram type rolling diaphragms shall not be permitted.

e. The main valve seat and stem bearing in the valve cover shall be removable. The cover bearing and seat in the 6" and smaller size valve shall be threaded into the cover and body. The valve seat in the 8" and larger size valves shall be retained by flat head machine screws for ease of maintenance. The lower bearing of the valve stem shall be contained concentrically within the seat and shall be exposed to the flow on all sides to avoid deposits. To insure proper alignment of the valve stem, the valve body and cover shall be machined with a locating lip. No "pinned" covers to the valve body shall be permitted. Cover bearing, disc retainer and seat shall be made of the same material. All necessary repairs and/or modifications other than replacement of the main valve body shall be possible without removing the valve from the pipeline. The valve shall be designed such that both the cover assembly and internal diaphragm assembly can be disassembled and lifted vertically straight up from the top of a narrow opening/vault. Y-pattern valves shall not be permitted. The seat shall be of the solid one piece design. Two piece seats or seat inserts shall not be permitted. Packing glands and/or stuffing boxes shall not be permitted.

4. Pilot Control System:

a. The pilot control shall be through two direct acting two-way solenoid pilot valves controlled by an external power source. The pilot control system shall include strainers and solenoid manual by-pass valves. The pilot control system shall utilize copper control tubing and brass fittings. The solenoid pilot valves either add or relieve line pressure from the cover chamber of the main valve, causing it to open or close as directed by the electronic controller. Solenoids shall have NEMA IV enclosures.

5. Material Specification for Solenoid

Pilot Controls: Component	Material
Body	Stainless Steel
Pilot Trim	Stainless Steel
Seals and Disc	NBR
Core and Plugnut	430F Stainless Steel
Core Springs	302 Stainless Steel
Shading Coil	Copper
Disc-Holder	CA
Core Guide	CA
Connections	FNPT
Pressure rating	400 psi Max.
Temperature Range	AC: Water to 125°F Max. DC: Water to 104°F Max.
Power Supply	120VAC / 60 Hz (standard)
Enclosure (standard)	NEMA Type 1, General Purpose, Watertight
Control Tubing	Stainless Steel
Control Fittings	Stainless Steel

6. Factory Assembly:
   a. Each control valve shall be factory assembled.

   b. The Quality Management System of the factory shall be certified in accordance with ISO 9001: 2008.

   c. For all control valves, the factory assembly shall include the complete main valve, pilot valve(s), and all associated accessories and control equipment.

   d. During factory assembly the control valve manufacture shall make all necessary adjustments and correct any defects.

7. Nameplates:

   a. Each Control Valve and associated pilot(s) shall be provided with an identifying nameplate.

   b. Nameplates, depending on type and size of control valve, shall be mounted in the most practical position possible, typically on the inlet side of the valve body.

   c. Nameplates shall be brass and a minimum of 3/32” thick, ¾” high and 2-3/4” long.

   d. Pertinent control valve data shall be etched or stamped into the nameplate. Data shall include control valve Catalog number, function, size, material, pressure rating, end-connection details, type of pilot controls used and control adjustment range.

8. Factory Testing:

    a. Each control valve shall be factory tested.

    b. The Quality Management System of the factory shall be certified in accordance with ISO 9001: 2008

    c. Tests shall conform to approved test procedures.

    d. The standard factory tests shall include a valve body and cover leakage test, seat leakage test and a stroke test. Control valves and pilot valves, in the partially open position, with both ends closed off with blind flanges (valves) and pipe plugs (pilots), shall be subject to an air test. The applied air pressure shall be 90 psi minimum. All air pressure tests shall be applied for a minimum of 15 minutes. No visible leakage is permitted through the valve seat, the pressure boundary walls of the valve body, valve cover, pilot body, pilot cover or the body-cover joint.

    e. Control valve manufacturer shall, upon request, offer additional testing, such as high pressure hydrostatic testing, positive material inspection testing, ferrite testing, liquid penetration inspection testing, magnetic particle examination testing and radiographic examination testing.

D. PRODUCT DATA

1. The following information shall be provided:

    a. Control Valve manufacturer's technical product data.

    b. Control Valve manufacturer's Installation, Operation and Maintenance manual (IOM).

2. Provide specific information on all optional features specified above and confirm that these items are provided.

3. The valve manufacturer shall be able to supply a complete line of equipment from 1" through 36" sizes and a complete selection of complementary accessories and equipment.

4. The control valve manufacture shall provide a computerized cavitation analysis report which shows flow rate, differential pressure, and percentage of valve opening. Cv factor, system velocity, and if there will be cavitation damage.

5. The manufacturer must also provide valve noise levels according to International Standards over the flow range of the valve. Noise calculation program will be specific to the control valve manufacturer, and based upon tests conducted by a third party, independent laboratory and will be able to provide dBA values for octave band frequencies between 31.5 and 8000 Hz. (Valves with KO trim calculations are per another industry accepted standard without the octave band frequency noise levels). Generic, third party noise calculation for non-specific control valves will not be accepted.

PART 3 - EXECUTION

A. DELIVERY, STORAGE AND HANDLING

1. Delivery
   a. Contractor shall coordinate shipping with the manufacturer.

2. Packing and Shipping

   a. Control valves specified herein shall be factory assembled. Any control valve appurtenances, accessories, parts and assemblies that are shipped unassembled shall be packaged and tagged in a manner that will protect the equipment from damage and facilitate the final assembly in the field.

   b. Care shall be taken in loading, transporting and unloading to protect control valves, appurtenances, or coatings from damage. Equipment shall not be dropped. All control valves and appurtenances shall be examined before installation and no piece shall be installed which is found to be defective. Any damage(s) shall be repaired.

   c. Prior to shipping, the control valves and all associated accessories shall be acceptably packaged and covered to prevent entry of foreign material.

   d. All packaged control valves shall be shipped, remain covered and stored on site until they are installed and put into use.

B. FIELD TESTING

1. A direct factory representative shall be made available by the equipment supplier for start-up service, inspection and necessary adjustments.

C. WARRANTY

1. The Control Valve manufacturer shall warrant the valve to be free of defects in material and workmanship for a period of three years from date of shipment provided the valve is installed and used in accordance with all applicable instructions. Electrical components shall have a one-year warranty.

END OF SECTION 40 05 53.2

DIVISION 40 – PROCESS INTERCONNECTIONS
Section 40 72 00 – Level Sensing and Measurement

PART 1 GENERAL

1.01 RELATED DOCUMENTS

A. Drawings and general provisions of the Contract, including General and Supplementary Conditions and Division 01 Specification Sections, apply to this Section.

1.02 SUMMARY

A. The work on this section includes the supply and installation of level transmitters, float switches and all related mounting hardware and equipment as required to furnish a complete and operational electrical system.

B. RELATED SECTIONS

1. Section 26 01 26 - Testing Electrical Systems
2. Section 26 05 19 – Low-Voltage Electrical Power Conductors and Cables
3. Section 26 05 29 – Hangers and Supports for Electrical Systems
4. Section 26 05 33 – Raceway and Boxes for Electrical Systems

C. REFERENCE TO STANDARDS

1. U.L. Listed

1.03 SUBMITTALS

A. Submit under the provisions of Section 01 30 00.

B. Submittal shall include electrical ratings, layout, wiring diagrams, U.L. listing, etc.

1.04 DELIVERY, STORAGE AND HANDLING

A. Level measurement equipment shall be stored indoors from time of delivery to jobsite, protected from weather and construction.

1.05 QUALIFICATIONS (RESERVED)

1.06 QUALITY ASSURANCE

A. The level measurement equipment shall be manufactured and supplied by a company regularly engaged in the business of furnishing level measurement equipment. If required by Owner, manufacturer shall submit a certification to a minimum experience of ten years in manufacture of level measurement equipment.

1.07 REGULATORY REQUIREMENTS (RESERVED)

1.08 COORDINATION (RESERVED)

1.09 MAINTENANCE SERVICE (WARRANTY)

A. All equipment shall be warranted to be free from defects in material and workmanship for a period of one year from date of substantial completion established by the Owner.

1.10 EXTRA MATERIALS (SPARE PARTS) (RESERVED)

PART 2 PRODUCTS

2.01 SUBMERSIBLE LEVEL TRANSMITTERS

A. Submersible level transmitters to be provided by tank manufacturer:

Location Name & Tag #	Transducer Span (psi)	Signal Output
	0 - ___ psi	4-20 mA DC
	0 - ___ psi	4-20 mA DC
	0 - ___ psi	4-20 mA DC

B. The Transducer shall be of the solid-state head-pressure sensing type, suitable for continuous submergence and operation and shall be installed in accordance with the manufacturer's instructions.

C. The transducer shall be installed in a suitably-sized wall-mounted PVC standpipe stilling well with diaphragm face of the sensor 6 inches above the floor of the structure.

D. Provide a stainless-steel hanging chain and stainless-steel latching ring at the top of the structure in order to permit field-removal and adjustment. The instrument manufacturer shall provide accessories as required to accommodate a lifting chain.

E. The transducer housing shall be fabricated entirely from stainless steel.

F. The transducer head shall be equipped with a durable stainless-steel cage and baffle plate designed to protect the sensing diaphragm from damage. The protective spacer shall anchor the instrument in place and position the sensing diaphragm off the bottom of the structure.

G. A hydraulic fill liquid shall be factory installed behind the diaphragm in order to transmit the sensed pressure to the transducer element.

H. Transducer electronics shall provide a 4-20 mA DC output signal directly proportional to the sensed pressure.

I. The internal pressure of the lower transducer assembly shall be relieved to atmospheric pressure through a heavy-duty jacketed hose/cable assembly and

either a slack bellows or maintenance-free vent/breather tube filter mounted in an upper-assembly enclosure. The breather system shall compensate for variations in barometric pressure and expansion and contraction of air due to temperature changes and altitude as well as prevent fouling from moisture and other corrosive elements. The enclosure shall be located above the anticipated high water level and flood elevation.

J. The transducer assembly shall be installed where noted on the drawings and placed in successful operation. It shall be provided with input power and output signal transient protection, and associated control elements as specified herein and in accordance with the manufacturer's instructions.

K. All components in contact with a wastewater environment shall be third party listed for use in a Class 1, Division 1, Group D environment. Provide compatible isolating-type (active) intrinsically-safe barrier if required for hazardous location application.

L. The Submersible Level Transmitter shall be one of the following:

1. Model BC001 Birdcage as manufactured by Blue Ribbon Corp.
2. PBLTX Series as manufactured by Dwyer/Mercoid, or
3. LevelRat as manufactured by Keller
4. No substitutions will be allowed.

2.02 ULTRASONIC LEVEL TRANSMITTER

A. Level indicator / transmitters shall utilize non-contact ultrasonic technology.

B. Unit transducer shall be temperature compensated.

C. Transmitter primary power is to be 120 VAC, 60 Hz, with isolated process signal output of 4-20 ma proportional to measured level into 750 ohm load.

D. Separation between Transducer and electronics shall be up to 1000 feet.

E. Transmitter electronics package shall be furnished in non-metallic NEMA 4X IP65) wall-mount enclosure suitable for outdoor use.

F. Transmitter electronics shall include algorithms for open-channel flow measurement and volume conversion.

G. Transmitter shall have no less than three (3) normally-open (N.O.) form "A" alarm/pump control relays with minimum rating of 5 Amps at 250 VAC. Relay operation shall be field programmable/re-programmable.

H. Display shall be alphanumeric back-lit LCD.

I. On units with a removable programming panel, furnish a minimum of one hand-held programmer for each project.

J. Include a minimum of two (2) bound paper instruction manuals.

K. Operating temperature for electronics shall be no less then -20°to 50°C.

L. Liquid level resolution shall be no less than 0.25% of program range or 0.24", whichever is greater. Calibrated range shall be from 1 ft to 50 feet with resolution of 0.1% of program range or 0.08" whichever is greater.

M. Transmitter shall include a volume conversion algorithm for conversion of horizontal-cylindrical tanks.

N. All transducer components located within a classified location shall be third party listed for use in a Class 1, Division 1, Group D environment.

O. Wet Well Ultrasonic Level Transmitter shall be one of the following:

1. Siemens/Milltronics HydroRanger 200 Model #7ML5034/7ML1034 series
2. Pulsar, Inc; Shalimar, Florida; Ultra-4

B. Compatible Level Transducers for Wet Well Ultrasonic Level Transmitters shall be ambient temperature compensated and shall be Milltronics XPS-10F (applications 1-33 feet) or XPS-15F (applications 1-50 feet), or equivalent. Where noted on project drawings, furnish transducer with 2" MNPT thread for installation into a 2" FNPT field adapter, Milltronics ST-H, or equivalent.

C. The contractor shall provide factory trained recorder manufacturer's representative for the purpose of field start-up, calibration and commissioning of the equipment. In addition, the factory trained representative shall provide minimum four (4) additional hours instruction for the owner on equipment set-up and maintenance procedures.

2.03 RADAR LEVEL SENSOR

A. The Radar Level sensor shall be Micropilot Series FMR10 as manufactured by Endress + Hauser or Rosemount 1208 as manufactured by Emerson.

B. The pulsed time of flight radar transmitter shall operate at 26 GHz using 2-wire technology for level measurement and/or open channel flow measurement.

C. Accuracy shall be =/- 0.2".

D. Maximum measurement distance shall be 0-16ft.

E. The radar shall have CSA C/US General purpose approvals as required.

F. Process Temperature range is -40 to 176 degrees F and pressure range is from -14.5 to 43 psi.

G. The unit provides diagnosis information according to NAMUR NE107 with clear text messages to remedy.

H. It must be possible to view a graphical representation of the actual signal and envelope curve on the display.

I. The process connection shall be 1” NPT, 1.5” NPT, 2” NTP or 3”- 6” ANSI flange connection by application. FMR10 series radar has 1” - 1.5” NPT only and the FMR20 series radar has 1”, 1.5” and 2” NPT and 3” - 6” flange options available.

J. The radar output signal shall be 4-20 mA dc loop powered.

K. The radar device shall have Bluetooth wireless technology interface and can be operated and configured via this interface using the SmartBlue app. The range under reference conditions is 33ft. The Bluetooth shall have both encrypted communication and password encryption for security purposes. The Bluetooth wireless technology interface can be deactivated. The FMR10 must be configured via Bluetooth while the FMR20 may be configured with 4-20mA/Hart or a remote RIA 15 display or Bluetooth as options.

L. The radar signal on alarm shall be 22.5mA

M. The radar shall have a linearization function with up to 32 value pairs entered allowing conversion of the measured value into any unit of length, weight, flow, or volume.

N. The radar unit shall be rated for IP66 or NEMA 4x.

O. The radar sensor body material shall be made of PVDF.

P. The radar sensor must have hermetically sealed wiring and fully potted electronics eliminating water ingress.

Q. Provide a weather-proof cover in PVDF.

R. Include a remote digital display RIA with NEMA 4X enclosure with viewing window and sunshield where installed exterior.

2.04 BUBBLER LEVEL MEASUREMENT SYSTEM

A. Bubbler level measurement system shall dynamically measure the liquid level in a wet well and shall output a proportional 4-20 madc signal representing this level.

B. Two identical bubbler level measurement systems shall be provided. Each shall include the following equipment, features and options:

1. Range: 0 - 2-1/2" to 0 - 400 ‘ H_2O, or equivalent, full scale. Calibrated Span: 0 - ___ - __ Ft. (USGS)
2. Output: 4-20 madc, 600 ohm resistance.
3. Accuracy: 0.5% of range.
4. Ambient Conditions: -30° F to +170° F.
5. Thermal Sensitivity: 0.01% per EF.
6. Visual Flow Indicator (Rotameter).
7. Built in air compressor.
8. NEMA 4X fiberglass enclosure, 16"x18", with window.
9. 120V power supply.
10. Loss of Air Alarm.
11. Clogged Dip Tube Alarm.

12. Auto-Blowdown.
13. Box Heater.
14. Audio Alarm (use with setpoints for low and high level alarms).

C. The bubbler level measurement system shall be Series 7600, as manufactured by Computer Instruments Corporation, or equivalent.

2.05 FLOATS (MERCURY FREE)

A. Float shall be capable of tripping internal switch within two inches of specified elevation. Float housings shall be stainless steel "ball" approximately 5 inches in diameter.

B. Floats shall be one of the following:
1. U.S. Filter (Consolidated Electric Company); Model 9G-EF
2. Anchor Scientific; Long Lake, Minnesota Roto-Float-SST/NM Type P
3. Contegra; St. Paul, Minnesota Model FS-90

Unless specified or indicated otherwise on the drawings, all floats shall be normally open, with contact closing on rising water level.

C. Unless otherwise noted on project drawings, a stainless steel clamp tube shall be furnished with an adapting fitting and two yokes for mounting to a vertically supported one inch Stainless Steel or Schedule 80 PVC pipe. One inch pipe shall be securely fastened to structure or wall at its ends with stainless steel pipe mounting brackets as detailed on drawings.

D. Where floats are noted to be installed in a Class 1, Division 1, Group D environment wet-well, each float shall additionally be furnished with an intrinsically-safe barrier to provide the necessary interface between the classified and non-classified environments. Intrinsically safe barrier shall be F.M. or other third-party listed device.

FLOAT SCHEDULE
To be provided by tank manufacturer

Float Location	No. of Floats	Cable Length (ft) (1)	Float Type (2)	Trip Elevation

Notes:
1. Lengths shown are FOR INFORMATION ONLY. Contractor shall field measure all float cable lengths required prior to ordering floats. A minimum of 5 feet of slack float cable shall be included in length to allow for adjustments of float actuation level.
2. A - N.O. contacts (contacts open on falling level).
B - N.C. contacts (contacts close on falling).

PART 3 EXECUTION

3.01 EXAMINATION

A. Verify length of float cable required. Running splices or field splicing in boxes other than those indicated on the drawings will not be allowed.

3.02 INSTALLATION

A. Install equipment as detailed on drawings and per manufacturer's requirements.

B. Stainless steel float bodies shall be grounded.

C. Secure slack to cable hangers with corrosion resistant nylon cable ties.

3.03 TESTING

A. Provide factory-trained manufacturer’s representative services to inspect completed installation, make all adjustment necessary to place system in trouble-free operation and instruct operating personnel in proper care and operation of equipment. Include four (4) hours additional services in order to instruct owner on use and maintenance of equipment.

END OF SECTION 40 72 00

PART 1 GENERAL

1.01 SECTION INCLUDES

A. This section covers the requirements to furnish and/or install pressure gages.

1.02 GENERAL

A. Like items of equipment specified herein shall be the end products of one manufacturer in order to achieve standardization for operation, maintenance, spare parts, and manufacturer's service.

B. See Conditions of the Contract and Division 1 - General Requirements, which contain information and requirements that apply to the work specified herein and are mandatory for this project.

1.03 WARRANTY

A. Contractor shall provide a written guarantee for all materials and workmanship extending twelve (12) months after startup. All materials, equipment, and workmanship furnished under these Specifications shall be free from all defects in material and/or workmanship. During the twelve (12) month period, the Contractor shall replace and install any part or parts which malfunction or corrode.

1.04 SUBMITTALS

A. Submittals shall be made in accordance with Section 01 33 00 - Submittal Procedures, in Division 1 - General Requirements.

PART 2 PRODUCTS

2.01 ISOLATED PRESSURE SENSOR, SLEEVE TYPE (IPS/S)

A. This type of isolated pressure sensor shall consist of a 360° flexible elastomeric sleeve, which is in contact with the water. The sleeve shall be installed in a metal or plastic housing, with a vacuum/pressure transmitting fluid fill between the housing and the sleeve. The housing shall be equipped with a ¼-inch dia. FNPT opening to allow installation of a pressure or vacuum/pressure gauge, or other instrumentation. A second opening in the housing shall also be provided for a fill/bleed connection for the pressure transfer fluid. The portions of the housing in contact with the process fluid, and the sleeve shall be selected to be compatible with the process fluid. The sleeve void shall be filled with a fluid selected for pressure or vacuum/pressure service.

B. Gauge: The pressure or vacuum/pressure gauge shall be an Ashcroft Type 1009, Grade 1A having a 3½-inch dia. dial, with 316SS Bourdon tube, 316SS socket, SS case and ¼-inch diameter MNPT connection. The gauge shall be filled with silicon fluid, and shall have one percent (1%) full scale accuracy (ASME Standard B40.1, Grade 1A). The pressure or pressure/vacuum range shall be as given on the drawings.

C. Connection: Depending on the size of the isolated pressure sensor, the unit may be designed for installation with either FNPT end connections, or between flanges. The process fluid connection diameter shall be as given on the drawings.

D. Designations for IPS/S:
   1. IPS/S: For normal service:
      a. Housing: Carbon steel.
      b. Sleeve: For lime slurry service.
      c. Connection: 150 lb., flat faced.
      d. Sleeve Fluid: Food grade.

E. IPS/S Manufacturer/Model/Type/Series:
   1. Ashcroft-Stratford Connecticut.
      a. Type 85 - NPT connection.
      b. Type 86 - Flanged connection.
      c. Type 80 - Flanged connection.

   2. Red Valve Company - Carnegie, Pennsylvania.
      a. Type 40 - Flanged connection.
      b. Type 42 - NPT connections.

2.02 GAUGE ACCESSORIES

A. Gauge Cocks
   1. Type 1 - ¼-inch diameter, 3-ounce brass with tee handle, rated at 100 psi air. Ashcroft 1092 or equal.
   2. Type 2 - ¼-inch diameter, 4-ounce brass with lever handle, rated at 100 psi air. Ashcroft 1095 or equal.
   3. Type 3 - ¼-inch diameter, 10-ounce brass with lever handle and union, rated at 100 psi air. Ashcroft 1094 or equal.

PART 3 EXECUTION

3.01 GENERAL

A. Pressure sensors shall be of the type specified herein and shall be installed at the locations shown, as detailed on the plans and as recommended by the manufacturer.

3.02 MANUFACTURER'S CERTIFICATE(S)

A. Provide manufacturer's certificate(s) in accordance with Section 01 43 33 - Manufacturer’s Field Services of Division 1 - General Requirements.

END OF SECTION 40 73 00

CITY OF GRAIN VALLEY

WATER TOWER UPGRADE

TABLE OF CONTENTS

SECTION NUMBER	SECTION TITLE	PAGE NUMBER
46 46 23	Tank Mixing System	46 46 23 1-6

PART 1 GENERAL

1.01 DESCRIPTION

A. These specifications provide the requirements to furnish and place into operation a potable tank mixer at the Grain Valley 1.0 MG Water Tower Upgrade.

1.02 RELATED SECTIONS

A. Division 1 – General Requirements
B. Division 2 – Existing Conditions
C. Division 3 – Concrete
D. Division 9 – Finishes
E. Division 26 – Electrical
F. Division 40 – Process Interconnections

1.03 REFERENCE TO STANDARDS

A. The following standards apply to the work and products specified herein.
   1. Occupational Safety and Health Administration, OSHA
   2. American National Standards Institute
   3. ANSI B16.1 Cast Iron Pipe Flanges and Flanged Fittings

1.04 SUBMITTAL REQUIREMENTS

A. Submit shop drawings and product data in accordance with Section 01 33 00 – Submittal Procedures for all parts of the specified system to include but not be limited to the following:
   1. Complete assembly and installation drawings.
   2. Descriptive information on material and equipment furnished.
   3. Location of all appurtenances.
   4. Process and instrumentation diagrams.
   5. Certified pump performance curves demonstrating compliance with performance specified herein.
   6. Mixing calculations demonstrating compliance with performance specified herein.
   7. Include a list of special tools required for checking, testing, parts replacement, and maintenance with current price information.
   8. Testing procedures and acceptance criteria shall be provided for glass-lined assemblies.

1.03 QUALITY ASSURANCE

A. Continuous Operation Equipment. The mixer shall operate continuously, all day and all night, using 120 VAC as the power source.

B. No Visual Defects. The mixer shall have no visual defects, and shall have high quality welds, assembly, and corrosion resistant finish.

C. Qualified US Manufacturer. The manufacturer of the mixer shall have extensive experience in the production of such equipment, and the equipment shall be manufactured in the continental United States.

D. Factory Startup Services. Delivery, placement and startup services shall be available, but not included in the bid. For factory delivery and placement, services shall be performed by full time factory employees experienced in the operation of this equipment and who have completed OSHA safety trainings applicable to this type of placement.

E. Warranty. The mixer shall be warranted to be free of defects in materials and workmanship for a period of 5 years. This equipment warranty would run directly from the manufacturer of the equipment to the owner. The equipment warranty would not be part of the contract or any required bond.

1.04 SUBMITTALS

A. The awarded Bidder shall provide an electronic copy of the following documents. Upon acceptance of these documents by the Engineer, the Bidder will be issued a Notice to Proceed, and may then proceed to place the equipment.

1. Manufacturer Qualification Document
2. List of Supplied Equipment
3. Manufacturer Product Sheets
4. Electric Power Source Requirements
5. NSF / ANSI Standard 61 Documentation
6. Warranty Statement
7. Operation Manuals

1.05 FIELD SERVICES

A. Placement and startup. Equipment manufacturer shall offer placement and startup performed by equipment manufacturer's full time factory employees trained in the operation of the mixer who have completed OSHA safety trainings applicable to this type of equipment placement and startup.

PART 2 PRODUCT SPECIFICATIONS

2.01 MANUFACTURER

A. Specified Equipment. The mixer shall be manufactured by Ixom Watercare, Inc. of Dickinson, ND, or be a pre-approved alternative.

B. Pre-approved Alternative(s). Alternatives to the specified equipment will be considered on the following basis only.

1. Ten (10) Days Before Bid. To offer equipment as a pre-approved alternative, written application from the alternative supplier shall be made to the Engineer at least 10 days in advance of the bid opening.

2. No Material Difference in Quality of Equipment or in Vendor Support. The application should include:
    a. A brief description of how the offered alternative does or does not meet each of the specifications in this document.
    b. An analysis of how acceptance of the alternative equipment would likely affect the overall water quality goals of the project.
    c. A statement of the science and support background of the supplier of the alternative equipment, so that the benefits and costs of the alternative equipment to the Owner can be estimated by the Engineer.

3. Five (5) Days Notice to Bidders. If the alternative equipment is accepted by the Engineer, an informational addendum to these specifications shall be distributed by the Engineer to plan holders at least 5 days in advance of the bid opening.

2.02 PERFORMANCE AND FEATURES

A. Complete Water Circulation Required. To meet the project objectives, the tank or reservoir circulation shall be achieved by a single or multiple submerged units within the reservoir capable of providing long distance circulation of water. The mixer shall have a direct measurable flow rate where suction shall enter specified mixer's intake positioned within 2 inches of reservoir floor and discharging water vertically in a sheet flow pattern to induce a large volume, low velocity flow to reach the tank or reservoir water surface. The mixer must be placement flexible in design to allow best hydraulic positioning for tank or reservoir conditions to prevent hydraulic short circuiting within tank or reservoir. Suction not within 2 inches of tank or reservoir floor is not allowed.

B. Number of units required. To meet the project objectives, the following number of mixers are required.

Qty	Model	Tank or Reservoir
1	GridBee GS potable tank mixer	1.0 MG Tank

D. Complete Mix: The mixer manufacturer guarantees that the subject tank will be completely mixed by the mixer. In continuous operation of the mixer: (1) at least once per 24 hours all water temperatures within the tank shall converge to within 0.8 degrees C, and

(2) at least once per 72 hours all chlorine concentrations within the tank shall converge to within 0.18 mg/l.

E. Fit Through Small Hatch Opening. The mixer shall be capable of fitting through a clear, unobstructed opening of 12” diameter without requiring disassembly or assembly.

F. Continuous Operation With 120VAC, 20 Amp Power Source. The mixer shall operate continuously during day and night while connected to electric grid power.

G. Stainless Steel Construction. The mixer shall be constructed primarily of Type 316 stainless steel metal for strength and superior corrosion resistance.

H. Motor. The mixer shall be mechanically operated by a submersible motor that meets the following criteria.

1. Direct Drive, with no gearbox and no oil-filled parts.

2. Designed for submersible operation. Mixer design shall include flow sleeve or housing around motor to provide water flow past motor per submersible motor design criteria providing lower temperature through water cooling the motor and increase winding life.

3. Designed for Continuous Operation without overheating or compromising motor life expectancy. Constant, full speed operation, variable frequency drive or other method of speed reduction not required and not allowed.

4. 120 VAC, 20 Amp power source shall be supplied by others and not the mixer manufacturer.

I. Exposed Rotating Protection. The mixer shall not have any rotating equipment openly exposed. Rotating shafts, impellers, and motors shall not

be openly exposed, and in the event of any part of the mixer exterior contacting the floor or cord, it shall not cause damage to either.

J. Low Elevation Intake: The mixer shall be supplied with an intake capable of being positioned at the lowest elevation of the tank or reservoir floor. The intake level shall bring water into the mixer at horizontal layer within 2 inches of the tank or reservoir floor to prevent hydraulic short circuiting of inflow water through the tank.

K. Restraint System. The mixer shall not require any brackets, penetrations, rope, ties, or fixed connections to the tank or reservoir columns, walls, or floor below the overflow elevation. The mixer shall allow for placement and servicing without requiring tank or reservoir to be drained. The mixer shall not require the use of a diver or diving team to enter the tank or reservoir to complete placement or service of the specified equipment.

L. Functional for All Water Levels. The mixer shall function properly and not be negatively impacted by fluctuating water levels down to 24 inches of water depth. Devices requiring more than 24 inches of water depth to properly function without damage not allowed.

M. SCADA and Controls. The mixer shall have an Electrical Control Enclosure. The mixer equipment shall be supplied with a Control Box capable of disconnecting 120 VAC outgoing power to the mixer equipment and meeting the following criteria:

1. NEMA 4X enclosure shall be provided with protection against condensation and moisture in a marine environment.
2. Control Box shall be UL 508 Listed for sound electrical design and safety.
3. Control Box shall include exterior mounted HOA switch, definite purpose contactor for mixer control, exterior display showing green run, red fault indication, and motor operating amperage, grounding lug, 120 VAC standard three-prong male molded plug, and locking latch for security.
4. Control Box shall include dry contact output (Normally Open and Normally Closed) for run and fault indication, 4-20 mA analog output scaled signal for motor current, and HOA switch position auxiliary dry contacts. Control Box shall include a 24 VDC relay to allow for remote on and off control of the mixer. Integration of inputs/outputs to site PLC/RTU shall be provided by others and not by the mixer equipment manufacture.
5. Control Box requires a 120 VAC power source, Minimum 20 Amp rated service located near the final placement of the Control Box. SCADA and control functions of the Control Box include 24 VDC power for automatic operation, run and fault indication, and 4-20 mA current output. The 120 VAC power source shall be supplied by others and not the mixer equipment manufacturer.

N. The complete mixer shall be NSF / ANSI Standard 61 and NSF / ANSI Standard 372 listed for safe contact with potable water. The mixer shall be NSF / ANSI Standard 61 listed to be safely in contact with a potable water volume as low as 5,000 gallons.

O. Maintenance Requirements. The mixer shall operate normally with the following maintenance features.

1. No scheduled lubrication is required of any system components including motor.

2. No spare parts shall be required to be kept on hand.

P. Equipment Support. The mixer manufacturer shall offer full factory support with the following staff and support services.

1. Customer Service, Application Engineering, and Equipment Engineering staff available by email or toll free phone.

2. Field personnel for placing and servicing the specified mixer.

3. Public website with detailed information available describing the mixer for this project and related applications of this equipment into potable water tanks and reservoirs.

4. Service plans for preventative maintenance and continued technology improvements for the specified mixer.

PART 3 EXECUTION

3.01 CONTRACTOR PLACEMENT

A. Placement, Startup, and Service. Shall be provided by others and not the factory equipment manufacturer.

END OF 46 46 23

CITY OF GRAIN VALLEY

WATER TOWER UPGRADE

APPENDIX A

GEOTECHNICAL ENGINEERING REPORT PREPARED BY TERRACON

Grain Valley Water Tower

Geotechnical Engineering Report

January 20, 2025 | Terracon Project No. 02235134

Prepared for:

Crawford, Murphy & Tilly Inc.
Kansas City, Missouri 64108

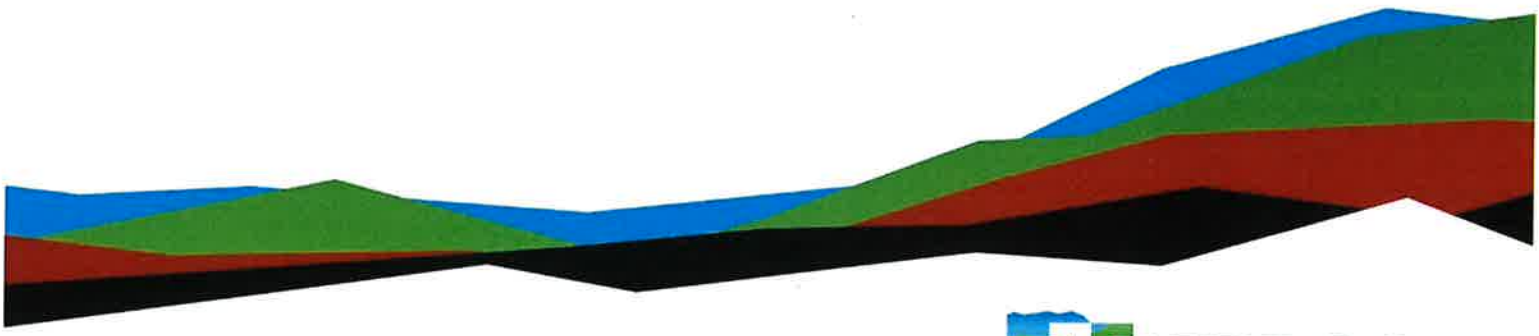

Terracon
Explore with us

Nationwide
Terracon.com

- Facilities
- Environmental
- Geotechnical

15620 W 113th Street
Lenexa, KS 66219
(913) 492-7777
Terracon.com

January 20, 2025

Crawford, Murphy & Tilly Inc.
1627 Main Street, Suite 600
Kansas City, Missouri 64108

Attn: Julie Jenson, P.E.
P: (816) 272-8318
E: jjenson@cmtengr.com

Re: Geotechnical Engineering Report
Grain Valley Water Tower
1301 NE Tyer Road
Grain Valley, Missouri
Terracon Project No. 02235134

Dear Ms. Jenson:

We have completed a subsurface exploration and geotechnical engineering evaluation for the referenced project in general accordance with Terracon Proposal No. P02235134 dated May 11, 2023. This report presents the findings of the subsurface exploration and provides geotechnical recommendations concerning the design and construction of foundations for the project.

We appreciate the opportunity to be of service to you on this project. If you have any questions concerning this report or if we may be of further service, please contact us.

Sincerely,

Terracon

Stacey L. Bonderer

Stacey Bonderer, E.I.T.

Staff Engineer

Kole C. Berg

Kole Berg, P.E.
Senior Consultant
Missouri: PE-2002016417



Table of Contents

Introduction 1
Project Description 1
Site Conditions 2
Geotechnical Characterization 2
Seismic Site Class 3
Geotechnical Overview 3
Ring-Wall Footing and Mat Foundation 3
Ring-Wall Footing and Mat Foundation Design Parameters 4
Ring-Wall Footing and Mat Foundation Construction Considerations 4
Deep Foundations 5
Drilled Shaft Design Parameters 5
Drilled Shaft Lateral Resistance 6
Drilled Shaft Construction Considerations 8
General Comments 9

Figures

GeoModel

Attachments

Exploration and Testing Procedures
Site Location and Exploration Plans
Exploration and Laboratory Results
Supporting Information

Note: This report was originally delivered in a web-based format. **Blue Bold** text in the report indicates a referenced section heading. The PDF version also includes hyperlinks which direct the reader to that section and clicking on the Terracon logo will bring you back to this page. For more interactive features, please view your project online at client.terracon.com.

Refer to each individual Attachment for a listing of contents.

Introduction

This report presents the results of our subsurface exploration and Geotechnical Engineering services performed for the proposed water tower to be located at 1301 NE Tyer Road in Grain Valley, Missouri. The purpose of these services was to provide information and geotechnical engineering recommendations relative to:

- Subsurface soil and rock conditions
- Groundwater conditions
- IBC seismic site class
- Foundations

Drawings showing the site and boring locations are shown on the attached **Site Location Plan** and **Exploration Plan**. The results of the laboratory testing performed on soil samples obtained from the site during our field exploration are included on the boring logs in **Exploration Results**.

Project Description

Our initial understanding of the project was provided in our proposal and was discussed during project planning. Our final understanding of the project conditions is as follows:

Item	Description
Project Description	We understand that a new 1.5-million-gallon water tower is planned. The tower will be approximately 120 feet tall and approximately 60 feet in diameter. The diameter at the base will be 40 feet.
Maximum Loads	Anticipated structural loads were not provided. We have assumed the following maximum loads based on our experience with similar projects. ▪ Water: 12,500 kips ▪ Water Tower Structure: 3,000 kips
Below-Grade Structures	No equipment pits or other below-grade areas are planned.
Free-Standing Retaining Walls	No free-standing retaining walls are planned.

Terracon should be notified if any of the above information is inconsistent with the planned construction as modifications to our recommendations may be necessary.

Site Conditions

The following description of site conditions is derived from our site visit in association with the field exploration and our review of publicly available geologic and topographic maps.

Item	Description
Project Location	The project is located at 1301 NE Tyer Road in Grain Valley, Missouri. Latitude/Longitude: 39.0272, -94.2205 (approximate) See **Site Location**
Existing Improvements	The site is presently vacant and grass covered.
Existing Topography	The site is relatively flat ground surface elevation ranges from approximately 935 feet to 932 feet according to Google Earth.

Geotechnical Characterization

We have developed a general characterization of the subsurface conditions based on the subsurface exploration, laboratory data, geologic setting, and our understanding of the project. This characterization, termed GeoModel, forms the basis of our geotechnical evaluation. Conditions observed at each boring location are indicated on the individual logs. The individual logs are in the **Exploration Results** and the GeoModel is in the **Figures** attachment of this report.

As part of our analyses, we identified the following model layers within the subsurface profile. For a more detailed view of the model layer depths at each boring location, refer to the GeoModel.

Model Layer	Layer Name	General Description
1	**Clay**	Lean and fat clay
2	**Bedrock**	Limestone and shale, highly to moderately weathered

The borings were observed during drilling and shortly after completion of drilling for the presence and level of water. Groundwater was not encountered any of the borings during drilling. A longer period of time may be required for groundwater to develop and stabilize in a borehole. Longer term observations in piezometers or observation wells, sealed from the influence of surface water, are often required to define groundwater levels.

Groundwater levels may fluctuate due to seasonal variations in the amount of rainfall, runoff, and other factors not evident at the time the borings were performed. "Perched"

water could occur above lower permeability soil layers and/or near the soil/bedrock interface. Therefore, groundwater conditions at other times may be different than the conditions encountered in our exploratory borings. The potential for water level fluctuations and perched water should be considered when developing design and construction plans and specifications for the project.

Seismic Site Class

The seismic design requirements for buildings and other structures are based on Seismic Design Category. The Site Class is required to determine the Seismic Design Category for a structure. The Site Class is based on the upper 100 feet of the site profile defined by a weighted average value of either shear wave velocity, standard penetration resistance, or undrained shear strength in accordance with Section 20.4 of ASCE 7 and the International Building Code (IBC); these seismic criteria are the same as American Water Works Association (AWWA) D100. Based on the soil and bedrock encountered in our subsurface exploration, **Seismic Site Class C** can be considered for design of the project. The subsurface exploration at this site extended to a maximum depth of 40 feet and terminated in bedrock. The site properties below the maximum boring depth were estimated based on our experience and knowledge of geologic conditions of the general area. Upon request, we could perform deeper borings or geophysical testing to confirm the conditions below the current maximum boring depth.

Geotechnical Overview

Due to the anticipated foundation loads of the proposed water tower, in our opinion, shallow footings bearing in the native clay would likely experience larger than tolerable settlements. Therefore, we recommend supporting the structure on a ring-wall footing or mat foundation bearing on bedrock or deep foundations that extend to competent bedrock.

The recommendations contained in this report are based upon the results of field and laboratory testing (presented in the **Exploration Results**), engineering analyses, and our current understanding of the proposed project. The **General Comments** section provides an understanding of the report limitations.

Ring-Wall Footing and Mat Foundation

Based on the conditions encountered at the borings, the water tower can be supported on a ring-wall footing or a mat foundation that bears on limestone bedrock or lean concrete fill that extends to bedrock. We have considered the influence of weathering on

the upper few feet of the limestone, as well as the interbedded shale and limestone layers within the bedrock, in developing these parameters.

Ring-Wall Footing and Mat Foundation Design Parameters

Item	Description
Maximum Net Allowable Bearing Pressure [1, 2, 3]	10 kips per square foot (ksf)
Minimum Foundation Dimensions	Per IBC 1809.7
Ultimate Passive Resistance [4] **(equivalent fluid pressure)**	290 pcf
Sliding Resistance [5]	0.4 allowable coefficient of friction – bearing directly on bedrock
Minimum Embedment below Finished Grade	Top of limestone bedrock (estimated at 11 to 12 feet below grade)
Estimated Total Settlement from Structural Loads [2]	On the order of 1/2 inch
Estimated Differential Settlement [2, 6]	About 1/2 to 2/3 of total settlement

1. The maximum net allowable bearing pressure is the pressure in excess of the minimum surrounding overburden pressure at the footing base elevation.
2. Values provided are for maximum loads noted in **Project Description**. Additional geotechnical consultation will be necessary if higher loads are anticipated.
3. Loose or disturbed rock fragments and any soil seams should be removed and replaced with lean concrete or foundation concrete.
4. Use of passive earth pressures require the sides of the excavation for the ring-wall footing or mat foundation to be nearly vertical and the concrete placed neat against these vertical faces or that the footing forms be removed and compacted structural fill be placed against the vertical footing face. Assumes no hydrostatic pressure.
5. Can be used to compute sliding resistance where the foundation bears directly on bedrock or on lean concrete fill that extends to bedrock.
6. Differential settlements are noted for equivalent-loaded foundations and bearing elevation as measured over a span of 50 feet.

Ring-Wall Footing and Mat Foundation Construction Considerations

The base of all foundation excavations should be free of water and loose or disturbed rock fragments and any soil seams prior to placing concrete. Concrete should be placed soon after excavating to reduce bearing surface disturbance.

The bearing materials at the base of the foundation excavation should be evaluated by a representative of the Geotechnical Engineer. If unsuitable bearing materials are

observed, the excavation should be extended deeper to suitable material. The footings could bear directly on suitable rock at the lower level or on lean concrete backfill as shown on the following figure.

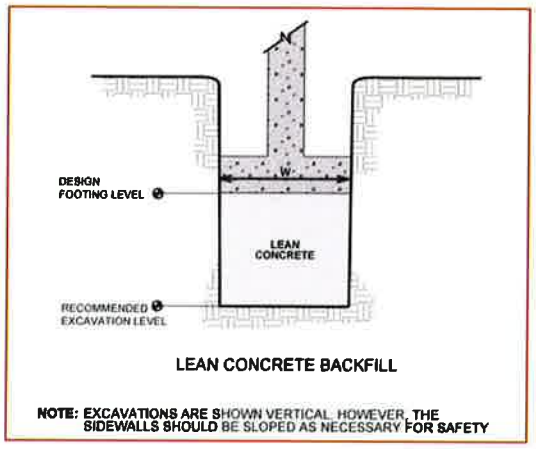

Deep Foundations

Drilled Shaft Design Parameters

Soil design parameters are provided below in the **Drilled Shaft Design Summary** table for the design of drilled shaft foundations. The values presented for allowable side friction and end bearing include a factor of safety.

Drilled Shaft Design Summary [1]

Depth (feet)	Stratigraphy [2]		Allowable Skin Friction (ksf) [3]	Allowable End Bearing Pressure (ksf) [4]
	No.	Material		
0-3	1	Lean/Fat Clay	0	0
3-11	1	Lean/Fat Clay	0	0
Below 11	2	Weathered Limestone and/or Shale Bedrock	3	25

Drilled Shaft Design Summary [1]

Depth (feet)	Stratigraphy [2]		Allowable Skin Friction (ksf) [3]	Allowable End Bearing Pressure (ksf) [4]
	No.	Material		

1. Design capacities are dependent upon the method of installation and quality control parameters. The values provided are estimates and should be verified when installation protocol have been finalized.
2. See Subsurface Profile in **Geotechnical Characterization** for more details on stratigraphy.
3. Applicable for compressive loading only. Reduce to 2/3 of values shown for uplift loading. The effective weight of the shaft can be added to uplift load resistance to the extent permitted by IBC.
4. Shafts should extend at least one diameter into the bearing stratum for end bearing to be considered.

Shafts should be adequately reinforced as designed by the Structural Engineer for both tension and shear to sufficient depths. Buoyant unit weights of the soil and concrete should be used in the calculations below the highest anticipated groundwater elevation.

Drilled shafts should have a minimum (center-to-center) spacing of three diameters. Closer spacing may require a reduction in axial load capacity. Axial capacity reduction can be determined by comparing the allowable axial capacity determined from the sum of individual piles in a group versus the capacity calculated using the perimeter and base of the pile group acting as a unit. The lesser of the two capacities should be used in design.

A minimum shaft diameter of 3 feet should be used. Drilled shafts should extend into the bearing strata at least one shaft diameter for the allowable end-bearing pressures listed in the above table.

Post-construction settlements of drilled shafts designed and constructed as described in this report are estimated to range from about ½ to ¾ inch. Differential settlement between individual shafts is expected to be ½ to ⅔ of the total settlement. Settlement estimates for drilled shafts are dependent on the shaft diameter, and these settlement estimates are valid for shaft diameters ranging from 3 to 5 feet.

Drilled Shaft Lateral Resistance

The following table lists input values for use of the computer program for LPILE analyses of lateral resistance. Modern versions of LPILE provide estimated default values of S_u, k_h, and E_{50} based on strength and are recommended for the project. Since deflection or a

service limit criterion will most likely control lateral capacity design, no safety/resistance factor is included with the parameters.

Stratigraphy[1]		LPILE Soil Model	S_u (psf)[2]	γ' (pcf)[2]	ε_{50}[4]	k[5] (pci)	
Depth (feet)	Material					Static	Cyclic
0-3	Clay	Stiff Clay w/o Free Water	Default Value	110	Use Default Value		
3-11	Clay	Stiff Clay w/o Free Water	Default Value	110	Use Default Value		
Below 11	Weathered Bedrock	Weak Rock	100 psi[3]	130	See Notes 4 and 5		

1. See Subsurface Profile in **Geotechnical Characterization** for more details on Stratigraphy.
2. Definition of Terms:
   S_u: Undrained shear strength
   γ': Effective unit weight
3. For the weak rock model, the uniaxial compressive strength (given here in psi) is input instead of the undrained shear strength.
4. For the weak rock model, the k_{rm} value is input instead of the ε_{50} value. A k_{rm} value of 0.0005 can be used for the weathered bedrock at this site.
5. For the weak rock model, the Young's modulus value is input instead of the static soil modulus parameter, k. A value of 10,000 psi can be used for the weathered bedrock at this site.

Group action for lateral resistance of piles/shafts should be considered when spacing is less than six diameters (center to center). Group effects can be roughly estimated with the design parameters for allowable passive resistance in the direction of the load reduced in accordance with the table below; p-y multipliers can also be used in LPILE as a rough estimate for group load behavior. We can provide guidance for p-y multipliers if detailed analyses using LPILE are planned.

Pile/Shaft Spacing [1]	Reduction Factors
6D	1.0
4D	0.85
3D	0.65

1. Where D is the diameter of the shaft

The shafts/piles should be spaced at least three shaft diameters apart (center-to-center) if they will be used to resist lateral loads. Pile caps and/or grade beams could be subject to uplift loading due to frost action; thus, foundation elements should extend at least 3 feet below the lowest adjacent finished grade for frost protection.

The load capacities provided herein are based on the stresses induced in the supporting rock strata. The structural capacity of the shafts should be checked to assure they can safely accommodate the combined stresses induced by axial and lateral forces. Lateral deflections of shafts should be evaluated using an appropriate analysis method, and will depend upon the shaft's diameter, length, configuration, stiffness and "fixed head" or "free head" condition. We can provide additional analyses and estimates of lateral deflections for specific loading conditions upon request. The load-carrying capacity of shafts may be improved by increasing the diameter and possibly the length.

Drilled Shaft Construction Considerations

The drilling contractor should be experienced in the subsurface conditions observed at the site, and the excavations should be performed with equipment capable of providing a clean bearing surface. The drilled straight-shaft foundation system should be installed in general accordance with the procedures presented in "Standard Specification for the Construction of Drilled Piers", ACI Publication No. 336.1-01.

The contractor is generally expected to use conventional "dry" techniques for installation of the drilled shaft. Subsurface water was not encountered in boring during the drilling activities. Subsurface water levels are influenced by seasonal and climatic conditions, which result in fluctuations in subsurface water elevations. Additionally, it is common for water to be present after periods of significant rainfall. However, the contractor should be prepared to install temporary casing and/or dewater the shaft excavations if caving conditions or water infiltration are encountered. We do not anticipate that personnel will enter the shaft excavations to clean or evaluate the bearing materials; however, temporary casing must be installed if personnel will enter a shaft excavation. While removing temporary casing from a shaft excavation during concrete placement, the concrete inside the casing should be maintained at a sufficient level to prevent intrusion of overburden materials into the excavation and resist any earth pressures outside the casing during the entire casing removal procedure. We recommend the concrete mixture for drilled shafts be designed with a suitable slump to facilitate casing removal and reduce the possibility of concrete arching.

Conventional excavating and drilling equipment should be able to penetrate the soil. A rock auger or core barrel will be required to advance the shaft excavations into the bedrock.

The drilling contractor should remove all soils and loose rock fragments from the base of each drilled shaft excavation prior to placing concrete. The drilled shaft installation process should be performed under the observation of the Geotechnical Engineer. The Geotechnical Engineer should document the shaft installation process including soil/rock

conditions observed, groundwater/seepage conditions, consistency with expected conditions, and details of the installed shafts.

General Comments

Our analysis and opinions are based upon our understanding of the project, the geotechnical conditions in the area, and the data obtained from our site exploration. Variations will occur between boring locations or due to the modifying effects of construction or weather. The nature and extent of such variations may not become evident until during or after construction. Terracon should be retained as the Geotechnical Engineer, where noted in this report, to provide observation and testing services during pertinent construction phases. If variations appear, we can provide further evaluation and supplemental recommendations. If variations are noted in the absence of our observation and testing services on-site, we should be immediately notified so that we can provide evaluation and supplemental recommendations.

Our Scope of Services does not include either specifically or by implication any environmental or biological (e.g., mold, fungi, bacteria) assessment of the site or identification or prevention of pollutants, hazardous materials or conditions. If the owner is concerned about the potential for such contamination or pollution, other studies should be undertaken.

Our services and any correspondence are intended for the sole benefit and exclusive use of our client for specific application to the project discussed and are accomplished in accordance with generally accepted geotechnical engineering practices with no third-party beneficiaries intended. Any third-party access to services or correspondence is solely for information purposes to support the services provided by Terracon to our client. Reliance upon the services and any work product is limited to our client and is not intended for third parties. Any use or reliance of the provided information by third parties is done solely at their own risk. No warranties, either express or implied, are intended or made.

Site characteristics as provided are for design purposes and not to estimate excavation cost. Any use of our report in that regard is done at the sole risk of the excavating cost estimator as there may be variations on the site that are not apparent in the data that could significantly impact excavation cost. Any parties charged with estimating excavation costs should seek their own site characterization for specific purposes to obtain the specific level of detail necessary for costing. Site safety, cost estimating, excavation support, and dewatering requirements/design are the responsibility of others. Construction and site development have the potential to affect adjacent properties. Such impacts can include damages due to vibration, modification of groundwater/surface water flow during construction, foundation movement due to undermining or subsidence from excavation, as well as noise or air quality concerns. Evaluation of these items on

nearby properties are commonly associated with contractor means and methods and are not addressed in this report. The owner and contractor should consider a preconstruction/precondition survey of surrounding development. If changes in the nature, design, or location of the project are planned, our conclusions and recommendations shall not be considered valid unless we review the changes and either verify or modify our conclusions in writing.

Figures

Contents:

GeoModel

Grain Valley Water Tower
1301 NE Tyler Road | Grain Valley, MO
Terracon Project No. 02235134

Terracon
15620 W 113th St
Lenexa, KS

GeoModel

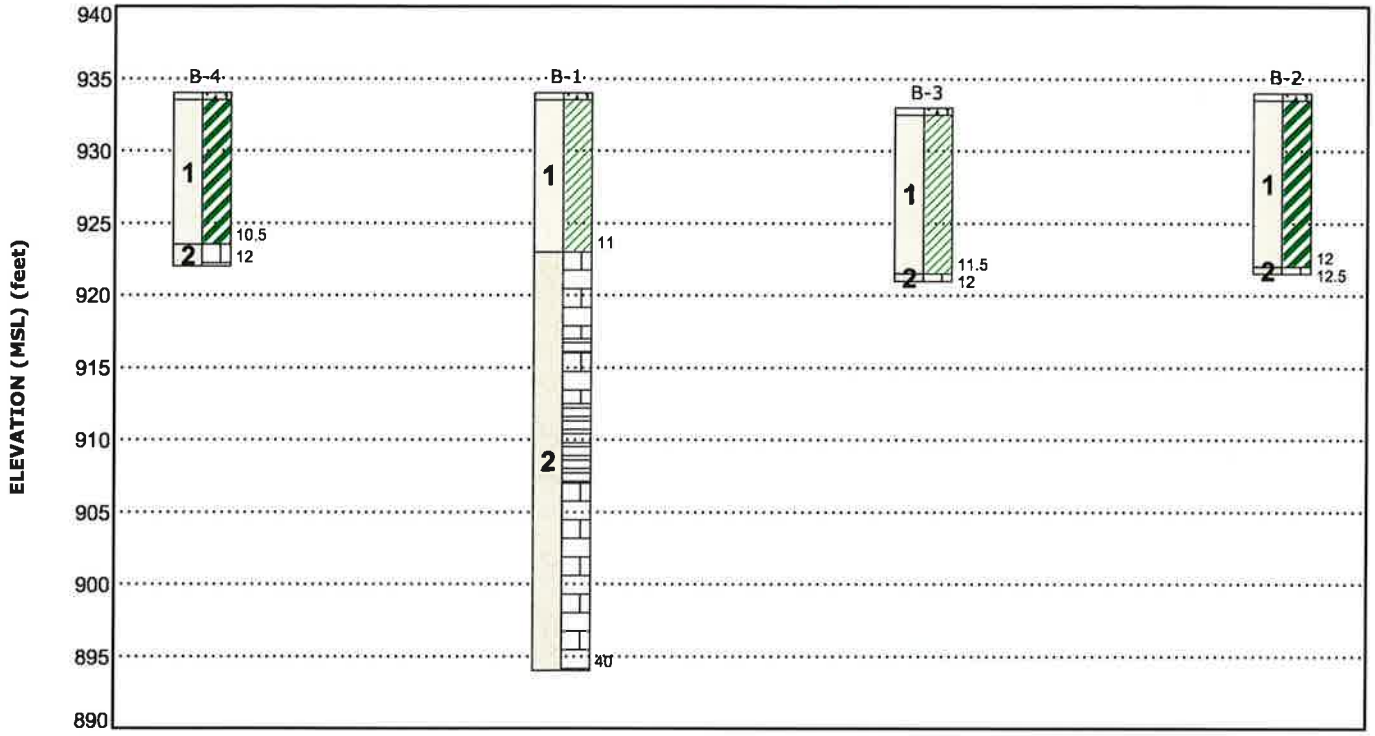

This is not a cross section. This is intended to display the Geotechnical Model only. See individual logs for more detailed conditions.

Model Layer	Layer Name	General Description	Legend
1	Clay	Lean and fat clay	Topsoil, Lean Clay, Limestone, Shale, Fat Clay
2	Bedrock	Limestone and shale, highly to moderately weathered	

NOTES:
Layering shown on this figure has been developed by the geotechnical engineer for purposes of modeling the subsurface conditions as required for the subsequent geotechnical engineering for this project.
Numbers adjacent to soil column indicate depth below ground surface.

Attachments

Exploration and Testing Procedures

Field Exploration

Number of Borings	Approximate Boring Depth (feet)	Location
1	40	Center of proposed water tower
3	12 to 12.5 (auger refusal)	Perimeter of proposed water tower base

Boring Layout and Elevations: Terracon personnel provided the boring layout using handheld GPS equipment (estimated horizontal accuracy of about ±10 feet) and referencing existing site features. Approximate ground surface elevations were estimated using Google Earth.

Subsurface Exploration Procedures: We advanced the borings with a track-mounted rotary drill rig using continuous flight augers. Samples were obtained from the borings using thin-walled tube and split-barrel sampling procedures. In the thin-walled tube sampling procedure, a thin-walled, seamless steel tube with a sharp cutting edge was pushed hydraulically into the soil to obtain a relatively undisturbed sample. In the split-barrel sampling procedure, a standard 2-inch outer diameter split-barrel sampling spoon was driven into the ground by a 140-pound automatic hammer falling a distance of 30 inches. The number of blows required to advance the sampling spoon the last 12 inches of a normal 18-inch penetration is recorded as the Standard Penetration Test (SPT) resistance value. The SPT resistance values, also referred to as N-values, are indicated on the boring logs at the test depths.

Boring B-1 was extended into the bedrock by core drilling with an NX-size diamond bit core barrel. The core samples recovered with the NX core barrel are approximately two inches in diameter. The rock core samples were visually examined and classified. Percent recovery was calculated for these samples and is noted on the boring logs. Rock quality designation (RQD) values for the rock core samples are noted on the boring logs. RQD is the percent of total length cored consisting only of sound pieces at least four inches in length and is an indicator of the relative integrity of the in-place rock mass.

The borings were backfilled with auger cuttings after their completion.

We also observed the boreholes while drilling and at the completion of drilling for the presence of groundwater. Groundwater was not observed in the boreholes at these times.

Our exploration team prepared field boring logs to record the sampling depths, penetration distances, other sampling information, visual classifications of the materials observed during drilling, and our interpretation of the subsurface conditions between samples. The samples were placed in appropriate containers and taken to our laboratory for testing and classification. The final boring logs provided with this report include modifications based on the results of the laboratory tests and observations of the recovered samples.

Laboratory Testing

The project engineer reviewed the field data and assigned laboratory tests. The laboratory testing program included the following tests on selected samples:

- Moisture Content
- Dry Unit Weight
- Unconfined Compression (soil and rock samples)
- Atterberg Limits

The laboratory testing program included examination of soil samples by an engineer. Based on the results of our field and laboratory programs, we described and classified the soil samples in general accordance with the Unified Soil Classification System.

Rock classification was conducted using locally accepted practices for engineering purposes; core samples and petrographic analysis may indicate other rock types. The rock classifications on the boring logs were determined using the attached Rock Classification Notes.

Site Location and Exploration Plans

Contents:

Site Location Plan
Exploration Plan

Note: All attachments are one page unless noted above.

Site Location

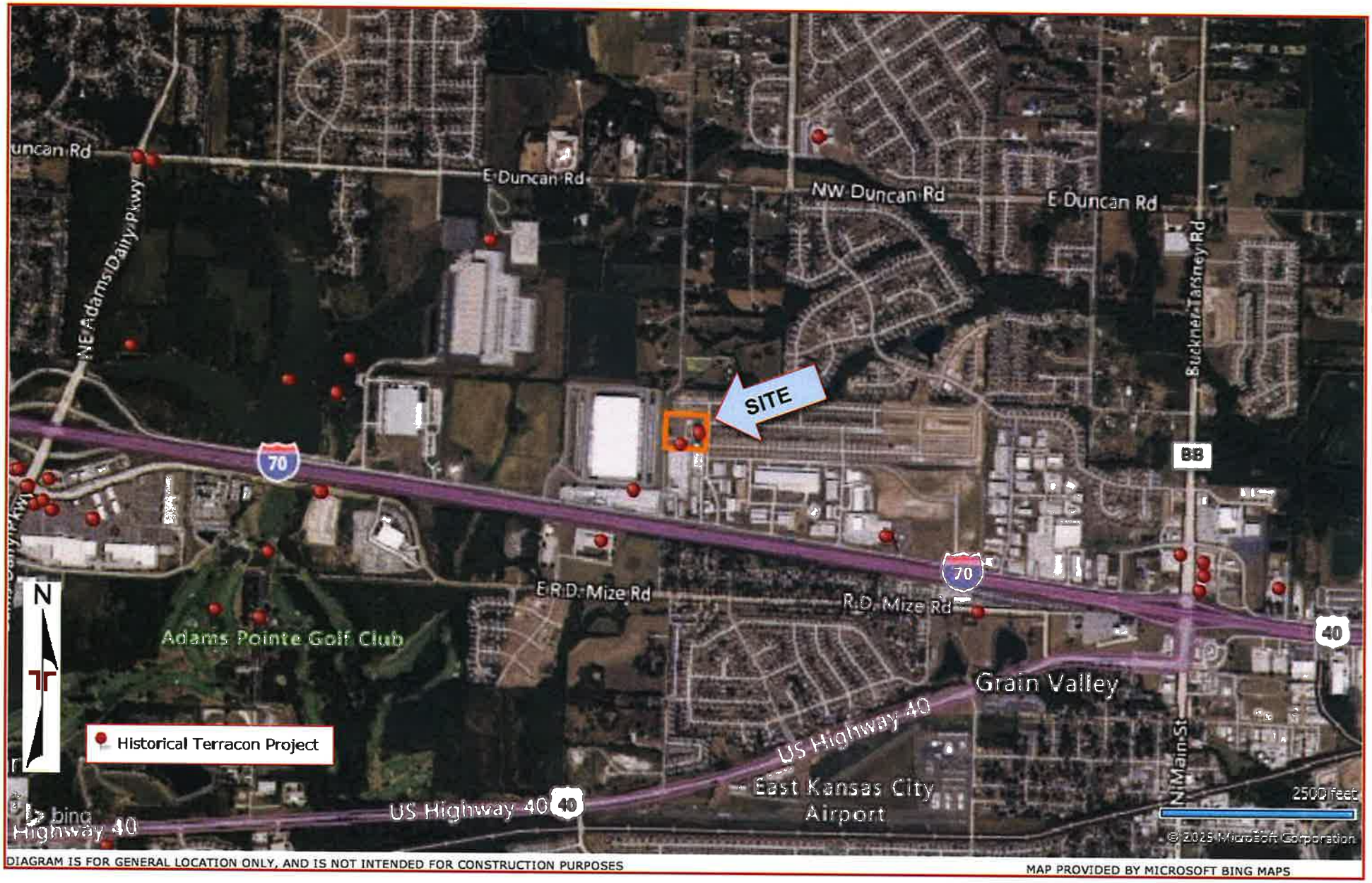

Exploration Plan



DIAGRAM IS FOR GENERAL LOCATION ONLY, AND IS NOT INTENDED FOR CONSTRUCTION PURPOSES

MAP PROVIDED BY MICROSOFT BING MAPS

Exploration and Laboratory Results

Contents:

Boring Logs (B-1 through B-4)
Rock Core Photo Log (2 pages)

Note: All attachments are one page unless noted above.

Grain Valley Water Tower
1301 NE Tyler Road | Grain Valley, MO
Terracon Project No. 02235134

15620 W 113th St
Lenexa, KS

Boring Log No. B-1

Location: See Exploration Plan

Latitude: 39.0273° Longitude: -94.2208°

Depth (Ft.) Approximate Elevation: 934 (Ft.)

Model Layer	Depth (Ft.)	Material Description	Elevation	Field Test Results	Rock Unconfined Compressive Strength (psi)	Unconfined Compressive Strength (psf)	Water Content (%)	Dry Unit Weight (pcf)	Atterberg Limits LL-PL-PI
1	0.5	**6" TOPSOIL**	933.5						
		LEAN CLAY (CL), brown to reddish brown, stiff to very stiff		4-7-8 N=15			19.0		
						5500	25.5	97	
				3-3-5 N=8			25.1		
				2-3-4 N=7			24.4		
	11.0		923						
2		**LIMESTONE**, light gray to yellow brown, highly to moderately weathered		REC = 69% RQD = 0%					
	17.0		917	REC = 100% RQD = 55%	18550		0.0	166	
	18.0	**SHALE**, dark gray, moderately weathered	916						
		LIMESTONE, gray to light gray, slightly weathered			20270		0.0	167	
	21.5		912.5	REC = 95% RQD = 47%					
		SHALE, dark gray, highly to moderately weathered							
	27.0		907	REC = 97% RQD = 57%	100		15.0	123	
		LIMESTONE, gray to light gray, moderately weathered		REC = 60% RQD = 37%					
	40.0		894	REC = 100% RQD = 65%	18450		0.0	165	
		Boring Terminated at 40 Feet							

Depth (Ft.): 5, 10, 15, 20, 25, 30, 35, 40

Water Level Observations: Groundwater not encountered during drilling.

Sample Type

See Exploration and Testing Procedures for a description of field and laboratory procedures used and additional data (If any).

See Supporting Information for explanation of symbols and abbreviations.

Notes

Advancement Method
0-11' CFA
11-40' Rock Coring

Abandonment Method
Boring backfilled with auger cuttings upon completion.

Drill Rig
556 CME 550X

Hammer Type
Automatic

Driller
CJ

Logged by
AG

Boring Started
12-16-2024

Boring Completed
12-16-2024

Grain Valley Water Tower
1301 NE Tyler Road | Grain Valley, MO
Terracon Project No. 02235134

15620 W 113th St
Lenexa, KS

Boring Log No. B-2

Location: See Exploration Plan

Latitude: 39.0273° Longitude: -94.2207°

Depth (Ft.) Approximate Elevation: 934 (Ft.)

Model Layer	Graphic Log	Depth (Ft.)	Water Level Observations	Sample Type	Field Test Results	Rock Unconfined Compressive Strength (psi)	Unconfined Compressive Strength (psf)	Water Content (%)	Dry Unit Weight (pcf)	Atterberg Limits LL-PL-PI
		0.5 **6" TOPSOIL** 933.5								
1		**FAT CLAY (CH)**, brown to reddish brown, stiff to very stiff			5-5-7 N=12			19.5		69-23-46
							6910	21.9	101	
		5			3-5-5 N=10			23.4		
					2-4-4 N=8			24.6		
		10								
		12.0 922								
2		12.5 **LIMESTONE**, gray, highly weathered 921.5								
		Auger Refusal at 12.5 Feet								

See Exploration and Testing Procedures for a description of field and laboratory procedures used and additional data (If any).

See Supporting Information for explanation of symbols and abbreviations.

Notes

Water Level Observations
Groundwater not encountered during drilling.

Advancement Method
CFA

Abandonment Method
Boring backfilled with auger cuttings upon completion.

Drill Rig
556 CME 550X

Hammer Type
Automatic

Driller
CJ

Logged by
AG

Boring Started
12-16-2024

Boring Completed
12-16-2024

Grain Valley Water Tower
1301 NE Tyler Road | Grain Valley, MO
Terracon Project No. 02235134

Terracon
15620 W 113th St
Lenexa, KS

Boring Log No. B-3

Location: See Exploration Plan
Latitude: 39.0272° Longitude: -94.2207°
Depth (Ft.) Approximate Elevation: 933 (Ft.)

Model Layer	Graphic Log	Depth (Ft.)	Water Level Observations	Sample Type	Field Test Results	Rock Unconfined Compressive Strength (psi)	Unconfined Compressive Strength (psf)	Water Content (%)	Dry Unit Weight (pcf)	Atterberg Limits LL-PL-PI
		0.5 **6" TOPSOIL** 932.5								
1		**LEAN CLAY (CL)**, brown to reddish brown, stiff			2-7-8 N=15			24.4		
							2820	26.8	93	
		5			4-4-4 N=8			24.4		45-17-28
					2-3-5 N=8			25.8		
		10								
		11.5 921.5								
2		12.0 **LIMESTONE**, gray, highly weathered 921								
		Auger Refusal at 12 Feet								

See Exploration and Testing Procedures for a description of field and laboratory procedures used and additional data (If any).

See Supporting Information for explanation of symbols and abbreviations.

Notes

Water Level Observations
Groundwater not encountered during drilling.

Advancement Method
CFA

Abandonment Method
Boring backfilled with auger cuttings upon completion.

Drill Rig
556 CME 550X

Hammer Type
Automatic

Driller
CJ

Logged by
AG

Boring Started
12-16-2024

Boring Completed
12-16-2024

Grain Valley Water Tower
1301 NE Tyler Road | Grain Valley, MO
Terracon Project No. 02235134

15620 W 113th St
Lenexa, KS

Boring Log No. B-4

Model Layer	Graphic Log	Location: See Exploration Plan Latitude: 39.0273° Longitude: -94.2209° Depth (Ft.) Approximate Elevation: 934 (Ft.)	Depth (Ft.)	Water Level Observations	Sample Type	Field Test Results	Rock Unconfined Compressive Strength (psi)	Unconfined Compressive Strength (psf)	Water Content (%)	Dry Unit Weight (pcf)	Atterberg Limits LL-PL-PI
		0.5 **6" TOPSOIL** 933.5									
1		**FAT CLAY (CH)**, brown to reddish brown, stiff				4-6-8 N=14			20.2		
			5					2310	25.4	95	
						3-4-5 N=9			24.6		
			10			2-4-5 N=9			23.3		53-17-36
2		10.5 923.5 **LIMESTONE**, gray, highly weathered 12.0 922									
		Auger Refusal at 12 Feet									

See Exploration and Testing Procedures for a description of field and laboratory procedures used and additional data (If any).

See Supporting Information for explanation of symbols and abbreviations.

Notes

Water Level Observations
Groundwater not encountered during drilling.

Advancement Method
CFA

Abandonment Method
Boring backfilled with auger cuttings upon completion.

Drill Rig
556 CME 550X

Hammer Type
Automatic

Driller
CJ

Logged by
AG

Boring Started
12-16-2024

Boring Completed
12-16-2024

Rock Core Photography Log



B-1 Rock core box from 11.0 feet to 21.0 feet



B-1 Rock core box from 21.0 feet to 31.0 feet



B-1 Rock core box from 31.0 feet to 40.0 feet

Supporting Information

Contents:

General Notes
Unified Soil Classification System
Rock Classification Notes

Note: All attachments are one page unless noted above.

Terracon
15620 W 113th St
Lenexa, KS

General Notes

Sampling

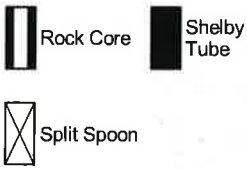

Water Level



Water levels indicated on the soil boring logs are the levels measured in the borehole at the times indicated. Groundwater level variations will occur over time. In low permeability soils, accurate determination of groundwater levels is not possible with short term water level observations.

Field Tests

N	Standard Penetration Test Resistance (Blows/Ft.)
(HP)	Hand Penetrometer
(T)	Torvane
(DCP)	Dynamic Cone Penetrometer
UC	Unconfined Compressive Strength
(PID)	Photo-Ionization Detector
(OVA)	Organic Vapor Analyzer

Descriptive Soil Classification

Soil classification as noted on the soil boring logs is based Unified Soil Classification System. Where sufficient laboratory data exist to classify the soils consistent with ASTM D2487 "Classification of Soils for Engineering Purposes" this procedure is used. ASTM D2488 "Description and Identification of Soils (Visual-Manual Procedure)" is also used to classify the soils, particularly where insufficient laboratory data exist to classify the soils in accordance with ASTM D2487. In addition to USCS classification, coarse grained soils are classified on the basis of their in-place relative density, and fine-grained soils are classified on the basis of their consistency. See "Strength Terms" table below for details. The ASTM standards noted above are for reference to methodology in general. In some cases, variations to methods are applied as a result of local practice or professional judgment.

Location And Elevation Notes

Exploration point locations as shown on the Exploration Plan and as noted on the soil boring logs in the form of Latitude and Longitude are approximate. See Exploration and Testing Procedures in the report for the methods used to locate the exploration points for this project. Surface elevation data annotated with +/- indicates that no actual topographical survey was conducted to confirm the surface elevation. Instead, the surface elevation was approximately determined from topographic maps of the area.

Strength Terms

Relative Density of Coarse-Grained Soils
(More than 50% retained on No. 200 sieve.)
Density determined by Standard Penetration Resistance

Relative Density	Standard Penetration or N-Value (Blows/Ft.)
Very Loose	0 - 3
Loose	4 - 9
Medium Dense	10 - 29
Dense	30 - 50
Very Dense	> 50

Consistency of Fine-Grained Soils
(50% or more passing the No. 200 sieve.)
Consistency determined by laboratory shear strength testing, field visual-manual procedures or standard penetration resistance

Consistency	Unconfined Compressive Strength Qu (psf)	Standard Penetration or N-Value (Blows/Ft.)
Very Soft	less than 500	0 - 1
Soft	500 to 1,000	2 - 4
Medium Stiff	1,000 to 2,000	4 - 8
Stiff	2,000 to 4,000	8 - 15
Very Stiff	4,000 to 8,000	15 - 30
Hard	> 8,000	> 30

Relevance of Exploration and Laboratory Test Results

Exploration/field results and/or laboratory test data contained within this document are intended for application to the project as described in this document. Use of such exploration/field results and/or laboratory test data should not be used independently of this document.

Unified Soil Classification System

Criteria for Assigning Group Symbols and Group Names Using Laboratory Tests [A]				Soil Classification	
				Group Symbol	Group Name [B]
Coarse-Grained Soils: More than 50% retained on No. 200 sieve	**Gravels:** More than 50% of coarse fraction retained on No. 4 sieve	**Clean Gravels:** Less than 5% fines [C]	Cu≥4 and 1≤Cc≤3 [E]	GW	Well-graded gravel [F]
			Cu<4 and/or [Cc<1 or Cc>3.0] [E]	GP	Poorly graded gravel [F]
		Gravels with Fines: More than 12% fines [C]	Fines classify as ML or MH	GM	Silty gravel [F, G, H]
			Fines classify as CL or CH	GC	Clayey gravel [F, G, H]
	Sands: 50% or more of coarse fraction passes No. 4 sieve	**Clean Sands:** Less than 5% fines [D]	Cu≥6 and 1≤Cc≤3 [E]	SW	Well-graded sand [I]
			Cu<6 and/or [Cc<1 or Cc>3.0] [E]	SP	Poorly graded sand [I]
		Sands with Fines: More than 12% fines [D]	Fines classify as ML or MH	SM	Silty sand [G, H, I]
			Fines classify as CL or CH	SC	Clayey sand [G, H, I]
Fine-Grained Soils: 50% or more passes the No. 200 sieve	**Silts and Clays:** Liquid limit less than 50	**Inorganic:**	PI > 7 and plots above "A" line [J]	CL	Lean clay [K, L, M]
			PI < 4 or plots below "A" line [J]	ML	Silt [K, L, M]
		Organic:	$\frac{LL\ oven\ dried}{LL\ not\ dried} < 0.75$	OL	Organic clay [K, L, M, N] / Organic silt [K, L, M, O]
	Silts and Clays: Liquid limit 50 or more	**Inorganic:**	PI plots on or above "A" line	CH	Fat clay [K, L, M]
			PI plots below "A" line	MH	Elastic silt [K, L, M]
		Organic:	$\frac{LL\ oven\ dried}{LL\ not\ dried} < 0.75$	OH	Organic clay [K, L, M, P] / Organic silt [K, L, M, Q]
Highly organic soils:			Primarily organic matter, dark in color, and organic odor	PT	Peat

[A] Based on the material passing the 3-inch (75-mm) sieve.
[B] If field sample contained cobbles or boulders, or both, add "with cobbles or boulders, or both" to group name.
[C] Gravels with 5 to 12% fines require dual symbols: GW-GM well-graded gravel with silt, GW-GC well-graded gravel with clay, GP-GM poorly graded gravel with silt, GP-GC poorly graded gravel with clay.
[D] Sands with 5 to 12% fines require dual symbols: SW-SM well-graded sand with silt, SW-SC well-graded sand with clay, SP-SM poorly graded sand with silt, SP-SC poorly graded sand with clay.
[E] $Cu = D_{60}/D_{10}$ $Cc = \frac{(D_{30})^2}{D_{10} \times D_{60}}$
[F] If soil contains ≥ 15% sand, add "with sand" to group name.
[G] If fines classify as CL-ML, use dual symbol GC-GM, or SC-SM.
[H] If fines are organic, add "with organic fines" to group name.
[I] If soil contains ≥ 15% gravel, add "with gravel" to group name.
[J] If Atterberg limits plot in shaded area, soil is a CL-ML, silty clay.
[K] If soil contains 15 to 29% plus No. 200, add "with sand" or "with gravel," whichever is predominant.
[L] If soil contains ≥ 30% plus No. 200 predominantly sand, add "sandy" to group name.
[M] If soil contains ≥ 30% plus No. 200, predominantly gravel, add "gravelly" to group name.
[N] PI ≥ 4 and plots on or above "A" line.
[O] PI < 4 or plots below "A" line.
[P] PI plots on or above "A" line.
[Q] PI plots below "A" line.

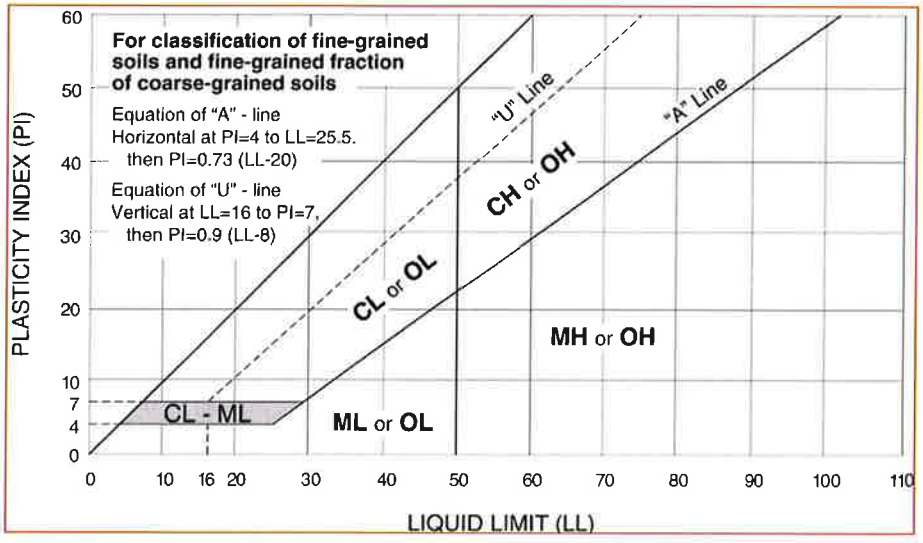

Rock Classification Notes

WEATHERING	
Term	**Description**
Fresh	Mineral crystals appear bright; show no discoloration. Features show little or now staining on surfaces. Discoloration does not extend into intact rock.
Slightly weathered	Rock generally fresh except along fractures. Some fractures stained and discoloration may extend <0.5 inches into rock.
Moderately weathered	Significant portions of rock are dull and discolored. Rock may be significantly weaker than in fresh state near fractures. Soil zones of limited extent may occur along some fractures.
Highly weathered	Rock dull and discolored throughout. Majority of rock mass is significantly weaker and has decomposed and/or disintegrated; isolated zones of stronger rock and/or soil may occur throughout.
Completely weathered	All rock material is decomposed and/or disintegrated to soil. The rock mass or fabric is still evident and largely intact. Isolated zones of stronger rock may occur locally.

STRENGTH OR HARDNESS		
Description	**Field Identification**	**Uniaxial Compressive Strength, psi**
Extremely strong	Can only be chipped with geological hammer. Rock rings on hammer blows. Cannot be scratched with a sharp pick. Hand specimens require several hard hammer blows to break.	>36,000
Very strong	Several blows of a geological hammer to fracture. Cannot be scratched with a 20d common steel nail. Can be scratched with a geologist's pick only with difficulty.	15,000-36,000
Strong	More than one blow of a geological hammer needed to fracture. Can be scratched with a 20d nail or geologist's pick. Gouges or grooves to ¼ inch deep can be excavated by a hard blow of a geologist's pick. Hand specimens can be detached by a moderate blow.	7,500-15,000
Medium strong	One blow of geological hammer needed to fracture. Can be distinctly scratched with 20d nail. Can be grooved or gouged 1/16 in. deep by firm pressure with a geologist's pick point. Can be fractured with single firm blow of geological hammer. Can be excavated in small chips (about 1-in. maximum size) by hard blows of the point of a geologist's pick;	3,500-7,500
Weak	Shallow indent by firm blow with geological hammer point. Can be gouged or grooved readily with geologist's pick point. Can be excavated in pieces several inches in size by moderate blows of a pick point. Small thin pieces can be broken by finger pressure.	700-3,500
Very weak	Crumbles under firm blow with geological hammer point. Can be excavated readily with the point of a geologist's pick. Pieces 1-in. or more in thickness can be broken with finger pressure. Can be scratched readily by fingernail.	150-700

DISCONTINUITY DESCRIPTION			
Fracture Spacing (Joints, Faults, Other Fractures)		**Bedding Spacing (May Include Foliation or Banding)**	
Description	**Spacing**	**Description**	**Spacing**
Intensely fractured	< 2.5 inches	**Laminated**	< ½-inch
Highly fractured	2.5 – 8 inches	**Very thin**	½ – 2 inches
Moderately fractured	8 inches to 2 feet	**Thin**	2 inches – 1 foot
Slightly fractured	2 to 6.5 feet	**Medium**	1 – 3 feet
Very slightly fractured	> 6.5 feet	**Thick**	3 – 10 feet
		Massive	> 10 feet

ROCK QUALITY DESIGNATION (RQD) [1]	
Description	**RQD Value (%)**
Very Poor	0 - 25
Poor	25 – 50
Fair	50 - 75
Good	75 – 90
Excellent	90 - 100

1. The combined length of all sound and intact core segments equal to or greater than 4 inches in length, expressed as a percentage of the total core run length.

CITY OF GRAIN VALLEY

WATER TOWER UPGRADE

APPENDIX B

GRAIN VALLEY STANDARD DETAIL DRAWINGS

GRAIN VALLEY
MISSOURI

LIFE OUTSIDE THE LINES

STANDARD

DETAIL

DRAWINGS

Revised September 2022

APPROVED

Richard J. Tuttle

September 16, 2022

City of Grain Valley **Date**

*Enclosed are Grain Valley's Standard Details for infrastructure. Contractors doing work on Grain Valley infrastructure are required to have a copy of this document with them in the field at all times.

GENERAL NOTES

1. The contractor shall have one (1) signed copy of the plans (approved by the City of Grain Valley) and one (1) copy of the approved Construction Standards and Specifications at the job site at all times.

2. Construction of the improvements shown or implied by this set of drawings shall not be initiated or any part thereof undertaken until the City is notified of such intent, and all required and properly executed bonds, permit fees and other agency permits are received and approved by the City.

3. The City of Grain Valley plan review is only for general conformance with City of Grain Valley Criteria and the City Code. The City is not responsible for the accuracy and adequacy of the design, or dimensions and elevations, which shall be confirmed and correlated at the job site. The City of Grain Valley through approval of this document assumes no responsibility other than that as stated above for the completeness and/or accuracy of this document.

4. Development plans are approved initially for one (1) year after which they automatically become void and must be updated and re-approved by the City Engineer before any construction will be permitted.

5. All construction materials and methods used shall comply with the current City of Grain Valley standards and construction specifications.

6. All materials and workmanship associated with this project shall be subject to inspection by the City of Grain Valley. The City of Grain Valley reserves the right to accept or reject any such materials and workmanship that does not conform to the City Standards and Technical Specifications.

7. The Contractor shall satisfy himself as to the accuracy of all measurements prior to construction of any permanent structure.

8. The contractor shall notify the City of Grain Valley Engineering Services Department forty-eight (48) hours prior to beginning construction.

9. All existing utilities indicated on the drawings are according to the best information available to the Engineer; however, all utilities actually existing may not be shown. Utilities damaged through the negligence of the contractor to obtain the location of same shall be repaired or replaced by the contractor at his expense and with immediate notice to the City prior to repair or replacement.

10. Contractor shall not be allowed to work on Saturdays, Sundays or Holidays without prior approval by the City.

11. By use of these plans the Contractor agrees that he shall be solely responsible for the safety of the construction workers and the public.

12. The Contractor shall notify the engineer immediately of any discrepancies in the plans.

13. All fill areas indicated shall be compacted to 95% Standard Proctor Density at +/-2% optimum moisture content. Documentation shall be provided and approved by the City.

14. All ditch lines within the Street right of way shall be compacted to 95% Standard Proctor Density at +/- 2% optimum moisture content. Documentation shall be provided and approved by the City.

15. Excavation and the removal of existing paving and curbs may not be wasted on site and is to be hauled off by the contractor. Contractor to be responsible for the disposal of excess materials.

16. It shall be the responsibility of the Contractor to control erosion and siltation during all phases of construction. All areas disturbed by the contractor shall be sodded or seeded if approved by City unless otherwise noted on the plans.

17. Relocation of any water line, sewer line or service line thereof required for the construction of this project shall be the responsibility of the contractor at his expense and with prior notice to the City.

18. The Contractor shall be responsible for the removal and/or temporary mounting and replacement of all existing street marker signs, stop signs, speed limit and other traffic control signs affected by construction with prior notice to the City.

19. Storm sewer pipe under streets shall be reinforced concrete pipe with HDPE as a potential alternative at the discretion of the City.

20. All proposed and existing street crossings shall be tamped granular backfill (Type 3) from the bottom of the trench to a point that is 15” below the finished grade of the street. All existing street crossings shall be filled with flowable fill per detail STR-011.

21. Pipes that are to be encased and or anchored with concrete, the trench line is to remain open until the concrete has reached 2000 PSI or 7 days, whichever comes first.

22. The location of existing utilities as shown are approximate. It shall be the responsibility of the Contractor to verify the locations of all exiting utilities.

23. Contractor shall submit all Asphaltic Concrete and PCC mix designs to the City of Grain Valley for approval prior to the start of construction.

GRAIN VALLEY
MISSOURI

STREET NOTES

1. All street construction on this project to be performed in accordance with City of Grain Valley and APWA Standard Specifications.

2. Wheelchair (Handicap) ramps shall be required at all intersections.

3. City may require testing of concrete or asphalt material, aggregate sub-base and subgrade; cost of testing to be incurred by the contractor.

4. Testing of subgrade will be required to determine need for subgrade stabilization per APWA Standards.

5. City to be notified 24 hours prior to sampling for proctor testing and/ or compaction testing. The City retains the right to halt construction for failing to be made aware of testing.

6. All construction shall meet APWA and City of Grain Valley Standard Details and Specifications.

7. All fill to be placed in maximum 12" lifts. All fill to be tested for compaction every 12", in accordance with APWA 2106.2.

8. Concrete used for sidewalks, curbs, pavement (including driveways within City ROW) and storm inlets shall meet standards of KCMMB 4K.

9. All proposed and existing street crossings shall be tamped granular backfill (Type 3) from the bottom of the trench to a point that is 15" below the finished grade of the street. All existing street crossings shall be filled with flowable fill per detail STR-011.

10. Asphaltic concrete mixes shall be in conformance with Section 2205.3 of the latest version of APWA Standard Specifications as modified herein. Base and surface course shall be Type 5-01 except as noted below. Performance Graded Asphalt binder grade PG64-22 shall be used in all mixes.

    a) Fractionated Reclaimed Asphalt Pavement (FRAP) may be used as an aggregate source. Maximum combined FRAP is 30% of the total

mix by weight. **Recycled Asphalt Shingles (RAS) are not allowed.**

b) All bituminous mixtures shall contain an anti-stripping agent at a rate of 0.75% by weight of the total asphalt cement.
c) The resistance of compacted bituminous mixture to moisture induced damage must be greater than 80% as determined AASHTOT 283-03 using a 4 inch mold. Specimens shall be conditioned by freezing and thawing.
d) Tack coat (CSS-1h) shall be in accordance with Section 2204 of the latest version of the APWA Standard Specifications and must be applied between each layer of new asphaltic surface and other surfaces specified including curbs.

11. For all new subdivisions, utilities (Evergy, Spire, Comcast, ATT etc.) shall be required to submit their proposed design along with a permit application prior to beginning construction. All utilities shall be designed and installed as close as possible to the design shown in STR-015.

STREET CLASSIFICATION	PAVEMENT TYPES AND REQUIRED BASE/SUB-BASE STRUCTURE	
	OPTION 1	OPTION 2
RESIDENTIAL	6" MIN. PORTLAND CEMENT CONCRETE PAVEMENT 6" MIN. COMPACTED/STABILIZED SUBGRADE 95% OF STANDARD MAX. DENSITY	2" TYPE 5 MODIFIED ASPHALTIC CONCRETE SURFACE 4" MIN. TYPE 5 MODIFIED ASPHALTIC CONCRETE BASE COURSE 6" MIN. MODOT TYPE 5 AGGREGATE SUB BASE COMPACTED 95% OF STANDARD DENSITY 6" MIN. COMPACTED/STABILIZED SUBGRADE 95% STANDARD MAX. DENSITY
COLLECTORS		
RESIDENTIAL	6" MIN. PORTLAND CEMENT CONCRETE PAVEMENT 6" MIN. COMPACTED/STABILIZED SUBGRADE 95% OF STANDARD MAX. DENSITY	2" TYPE 5 MODIFIED ASPHALTIC CONCRETE SURFACE 5" MIN. TYPE 5 MODIFIED ASPHALTIC CONCRETE BASE COURSE 6" MIN. MODOT TYPE 5 AGGREGATE SUB BASE COMPACTED 95% OF STANDARD DENSITY 6" MIN. COMPACTED/STABILIZED SUBGRADE 95% STANDARD MAX. DENSITY
COMMERCIAL	6" MIN. PORTLAND CEMENT CONCRETE PAVEMENT 6" MIN. COMPACTED/STABILIZED SUBGRADE 95% OF STANDARD MAX. DENSITY	2" TYPE 5 MODIFIED ASPHALTIC CONCRETE SURFACE 5" MIN. TYPE 5 MODIFIED ASPHALTIC CONCRETE BASE COURSE 6" MIN. MODOT TYPE 5 AGGREGATE SUB BASE COMPACTED 95% OF STANDARD DENSITY 6" MIN. COMPACTED/STABILIZED SUBGRADE 95% STANDARD MAX. DENSITY
INDUSTRIAL	8" MIN. PORTLAND CEMENT CONCRETE PAVEMENT 6" MIN. COMPACTED/STABILIZED SUBGRADE 95% OF STANDARD MAX. DENSITY	2" TYPE 5 MODIFIED ASPHALTIC CONCRETE SURFACE 8" MIN. TYPE 5 MODIFIED ASPHALTIC CONCRETE BASE COURSE 6" MIN. MODOT TYPE 5 AGGREGATE SUB BASE COMPACTED 95% OF STANDARD DENSITY 6" MIN. COMPACTED/STABILIZED SUBGRADE 95% STANDARD MAX. DENSITY
ARTERIAL		
MINOR	8" MIN. PORTLAND CEMENT CONCRETE PAVEMENT 6" MIN. COMPACTED/STABILIZED SUBGRADE 95% STANDARD MAX. DENSITY	2" TYPE 5 MODIFIED ASPHALTIC CONCRETE SURFACE 8" MIN. TYPE 5 MODIFIED ASPHALTIC CONCRETE BASE COURSE 6" MIN. MODOT TYPE 5 AGGREGATE SUB BASE COMPACTED 95% OF STANDARD DENSITY 6" MIN. COMPACTED/STABILIZED SUBGRADE 95% STANDARD MAX. DENSITY
MAJOR	9" MIN. PORTLAND CEMENT CONCRETE PAVEMENT 6" MIN. COMPACTED/STABILIZED SUBGRADE 95% STANDARD MAX. DENSITY	2" TYPE 5 MODIFIED ASPHALTIC CONCRETE SURFACE 9" MIN. TYPE 5 MODIFIED ASPHALTIC CONCRETE BASE COURSE 6" MIN. MODOT TYPE 5 AGGREGATE SUB BASE COMPACTED 95% OF STANDARD DENSITY 6" MIN. COMPACTED/STABILIZED SUBGRADE 95% STANDARD MAX. DENSITY
SUBGRADE		
SUBGRADE "REQUIREMENTS FOR ALL PAVEMENTS"	CONSTRUCTION OF PAVEMENTS ON HIGH PLASTICITY SOILS SHALL BE MODIFIED WITH HYDRATED LIME, CEMENT, OR CLASS "C" FLY ASH OR REPLACED WITH LOWER PLASTICITY SOILS. HIGH PLASITICITY SOILS SHALL BE DEFINED AS SOILS WITH A LIQUID LIMIT GREATER THAN 50 AND A PLASTICITY INDEX GREATER THAN 30. DETERMINATION OF THE SOIL PLASTICITY SHALL BE PROVIDED BY THE CONTRACTOR AT THE DIRECTION OF THE CITY ENGINEER	

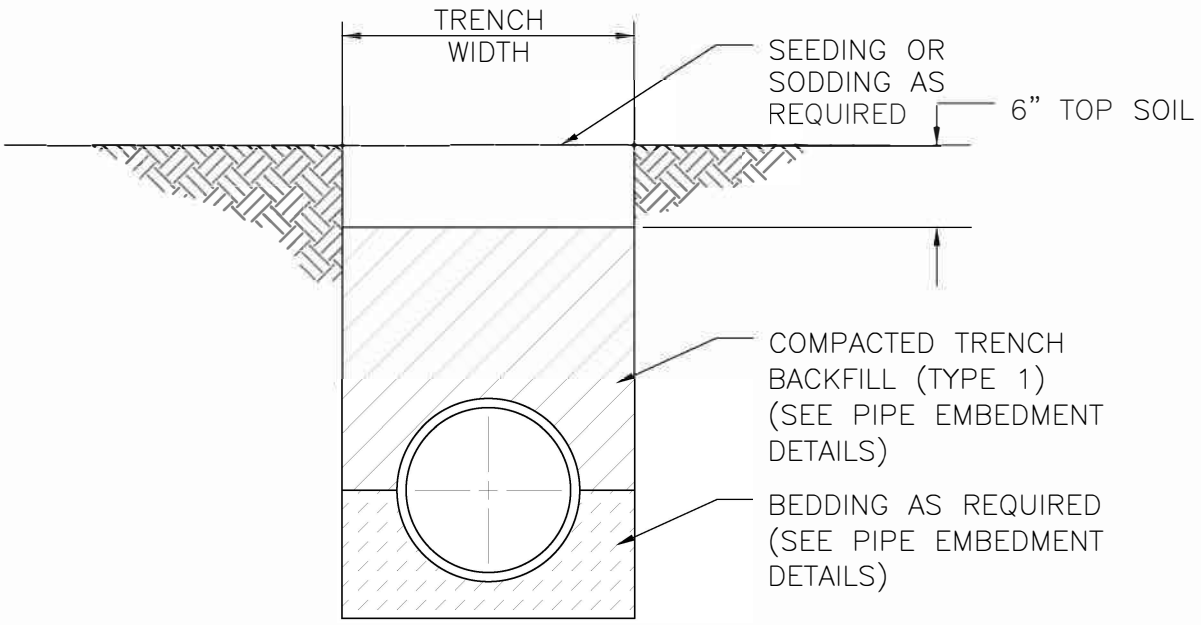

OUTSIDE PAVED AREAS

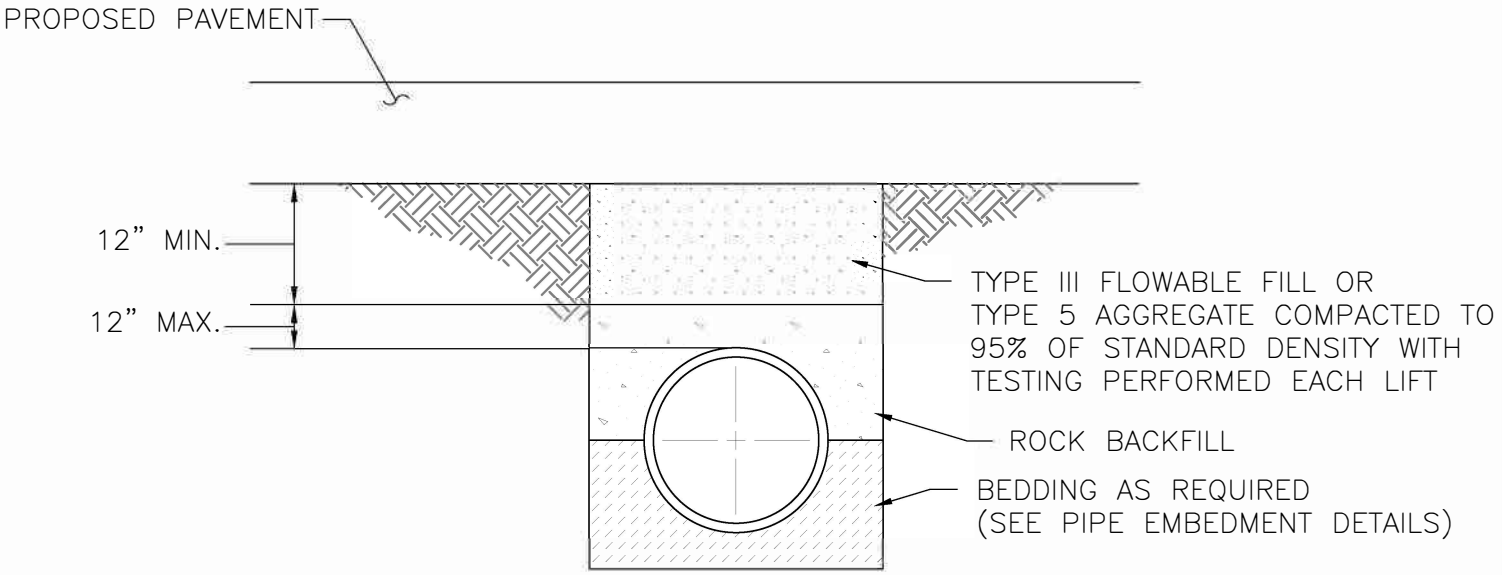

INSIDE PROPOSED PAVED AREAS

(TO ONE FOOT BEHIND CURB)
FOR ANY TESTED ROAD BASE

TYPICAL TRENCH BACKFILL DETAIL

GRAIN VALLEY
MISSOURI

DATE:	04/28/20
SCALE:	NO SCALE

STR-012

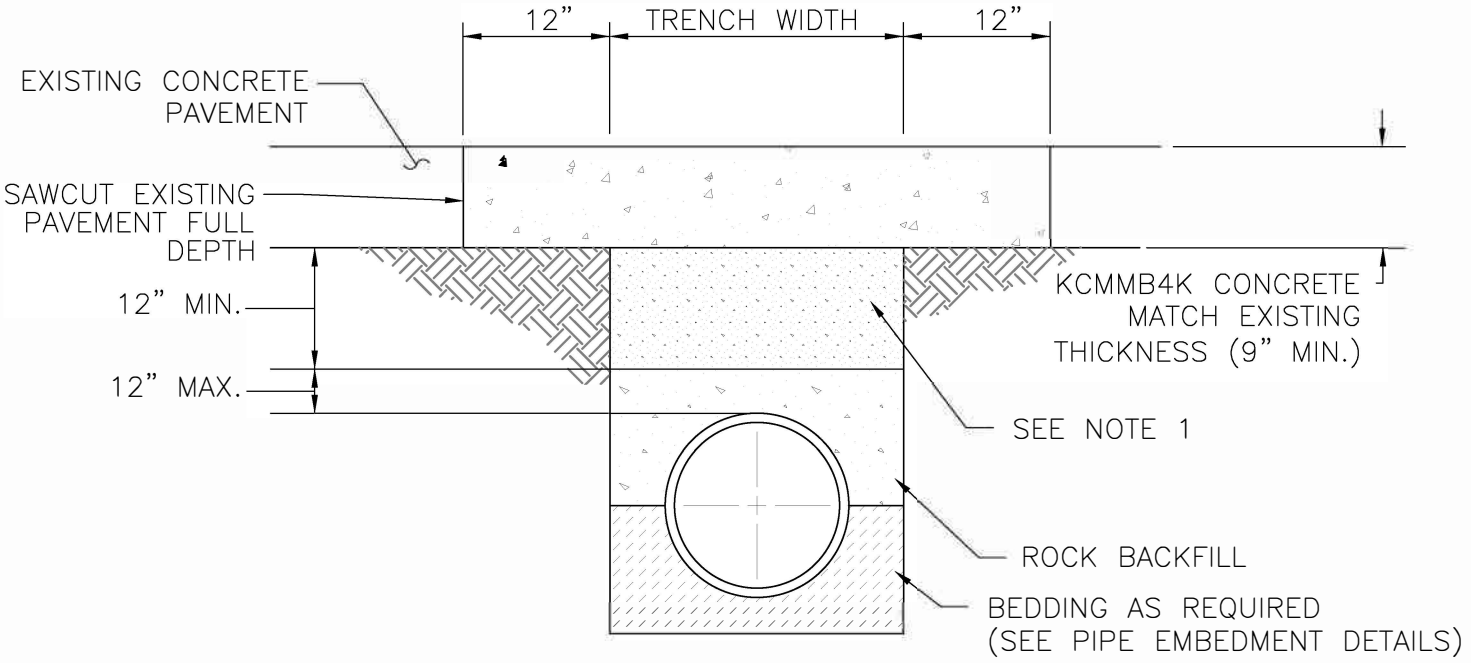

INSIDE EXISTING CONCRETE PAVED AREAS

(TO ONE FOOT BEHIND CURB)
FOR ANY TESTED ROAD BASE
OR ANY EXISTING ROAD

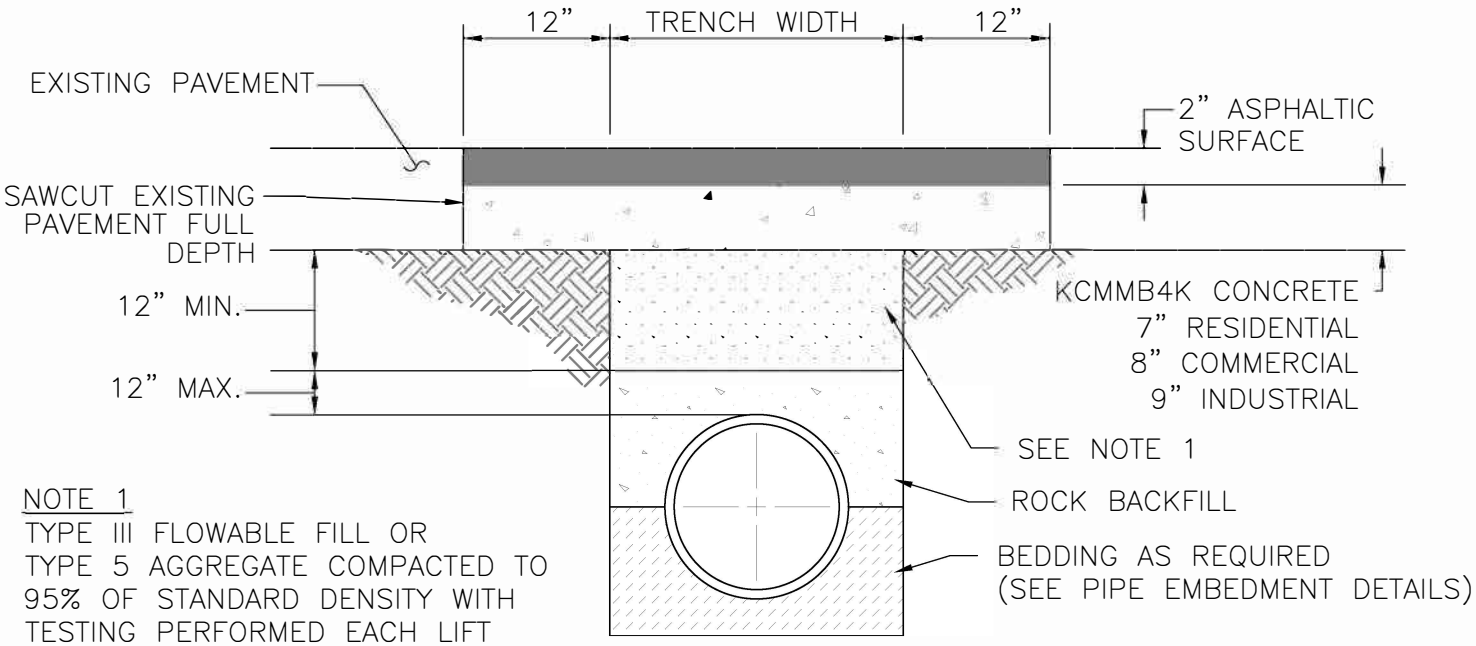

NOTE 1
TYPE III FLOWABLE FILL OR
TYPE 5 AGGREGATE COMPACTED TO
95% OF STANDARD DENSITY WITH
TESTING PERFORMED EACH LIFT

INSIDE EXISTING ASPHALT PAVED AREAS

(TO ONE FOOT BEHIND CURB)
FOR ANY TESTED ROAD BASE
OR ANY EXISTING ROAD

TYPICAL STREET REPAIR DETAIL

GRAIN VALLEY
MISSOURI

DATE:	04/28/20
SCALE:	NO SCALE

STR-014

DATE: 6/2/20
SCALE: NO SCALE

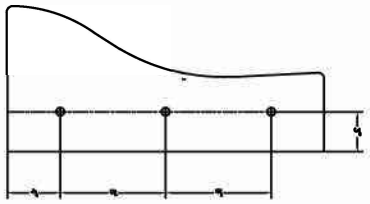

SECTION AA
CUT SECTION CURB CUT AND REPAIR
NTS

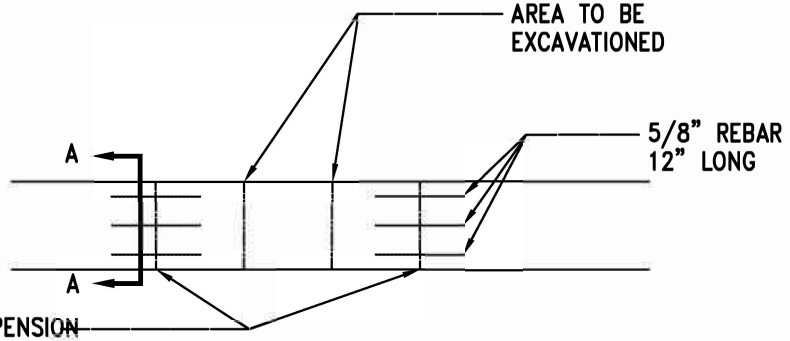

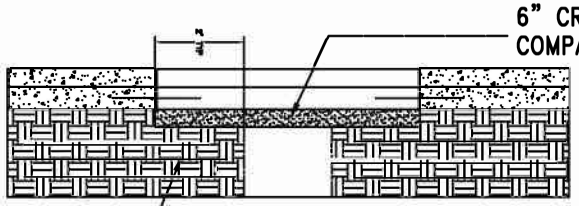

NOTES
1. BACKFILLING OF EXCAVATIONED AREA TO BE INACCORDANCE WITH GRAIN VALLEY STANDARD STREET CUT DETAIL
2. DOWELS SHALL GREASED AND WRAPED ON ONE END WITH EXPANSION TUBES
3. LIMESTONE SHALL BE LAYED IN 4" LIFTS AND COMPACTED TO 95% DENSITY
4. CONTRACTION JOINTS SHALL BE INSTALL EVERY 10' AS PER APWA STANDARD DETAIL NUMBER C-1 (APWA 1997)
5. CONCRETE SHALL MEET STANDARDS SET MCIB FOR TYPE A
6. WHEN WITHIN 4' OF EXPANSION OR CONTROL JOINT EXTEND REPAIR TO JOINT.

GRAIN VALLEY MISSOURI

CURB & GUTTER EXCAVATION REPAIR DETAIL

MISC/001

GRAIN VALLEY
MISSOURI

Water Notes

1. All ductile iron pipe shall be class 50 ductile iron pipe complete with all accessories conforming to ASA specifications A21.8. The joints shall be the bolted, gasketed joint type “U.S. Pipe & Foundry Tyton” or “American Cast Iron Pipe Company Fastite” or approved equal.

2. All PVC pipe shall comply with AWWA C-900 class DR 18 only, for 150 PSI service.

3. All water lines shall have a minimum of 42 inches of cover.

4. Fire hydrants shall be Waterous Pacer WB67 or Mueller A423 with nonrising stem. Hydrants shall have a 5 ¼“ valve with a 4 ½“ pumper nozzle, and 2, 2 ½“ hose nozzles, left hand opening, or approved equal by the City of Grain Valley.

5. Gate valves shall be resilient type conforming to AWWA C-509 with mechanical joint end connections.

6. Valve boxes shall be approved by the City of Grain Valley, Missouri. All boxes to be installed out of the roadway.

7. Water line to be installed five feet back of curb unless noted.

8. All construction of water lines on this project shall be in accordance with Specifications and Procedural Requirements of the City of Grain Valley, Missouri and with the requirements of the Missouri Department of Health and Missouri Department of Natural Resources.

9. All bends in water lines shall have thrust blocking or field loc gaskets as required.

10. Restrained type joints utilized in place of backing and thrust blocks shall require manufacturing computations for number of restrained joints required for 150 PSI testing.

11. Water lines shall be hydrostatically tested for backing and leakage at 150 PSI per AWWA C-600. Disinfection (Chlorination) shall be done in accordance with AWWA C-651. City shall witness the above and shall receive acceptable results of bacteriologic tests before the line is placed in service. Hydrostatic testing requires 150 PSI for 2 hours.

12. The Contractor shall furnish and install all fittings required to provide proper horizontal and vertical alignment for new water mains, connections to existing water mains and installation of fire hydrants at the proper location and elevation.

13. The Contractor shall furnish and install all temporary blow-off assemblies, fittings, thrust blocking, and restraining devices required for temporary connections for flushing, pressure testing, chlorination, and de-chlorination of the new water mains. Prior to placing new mains into service the Contractor shall remove any corporation cocks used for testing or chlorination and replace them with tapered brass plugs.

14. Scheduling of water main shut offs and connection to existing mains shall be at the discretion of the City Public Works Department.

15. All fire hydrant branches shall be restrained using approved restraining devices. Hydrants shall be installed so that the centerline of the outlet nozzle is between eighteen and twenty-one inches (18”-21”) above finished grade, or curb were applicable.

16. Sections of water main requiring multiple bends, such as cul-de-sacs, shall be restrained with approved joint restraining devices and straddle blocks.

17. Covers, lids, and standpipes on all abandoned valves shall be removed to at least two feet (2’) below grade and the area shall be properly backfilled. In paved areas removal of valve lid and filling of valve box with concrete may be allowed at Public Works Department discretion.

18. The Contractor shall verify the outside diameter (O.D.) of the existing water main prior to scheduling connection. Provide transition couplings as required.

19. All existing water services being disconnected shall be disconnected at the corporation stop.

20. All proposed and existing street crossings shall be tamped granular backfill (Type 3) from the bottom of the trench to a point that is 15” below the finished grade of the street. All existing street crossings shall be filled with flowable fill per detail STR-011.

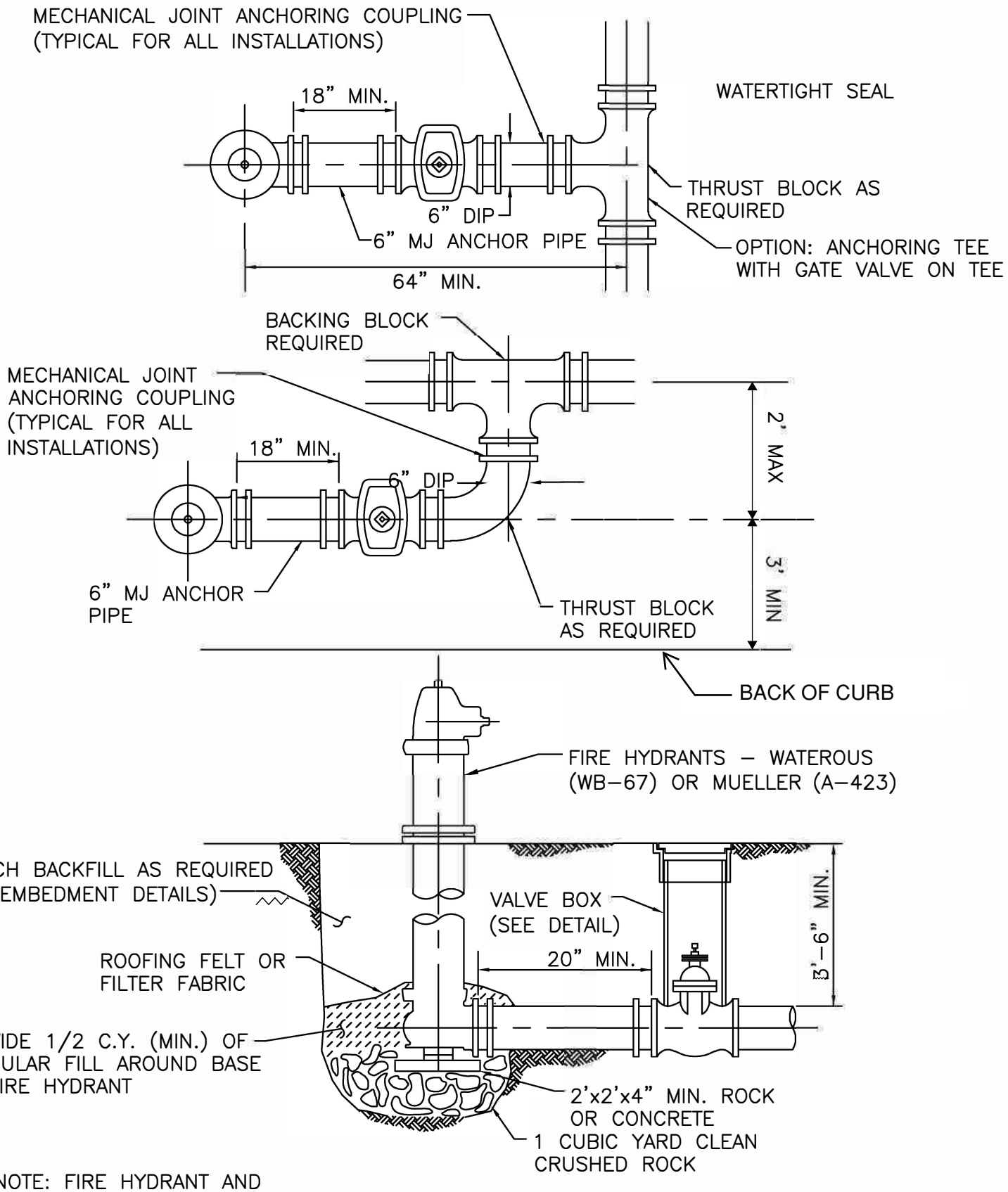

NOTE: FIRE HYDRANT AND VALVE ASSEMBLY SHALL BE CLEAR OF SIDEWALK PLACEMENT.

FIRE HYDRANT DETAIL

GRAIN VALLEY MISSOURI

DATE:	6/2/2020
SCALE:	NO SCALE

WAT–001

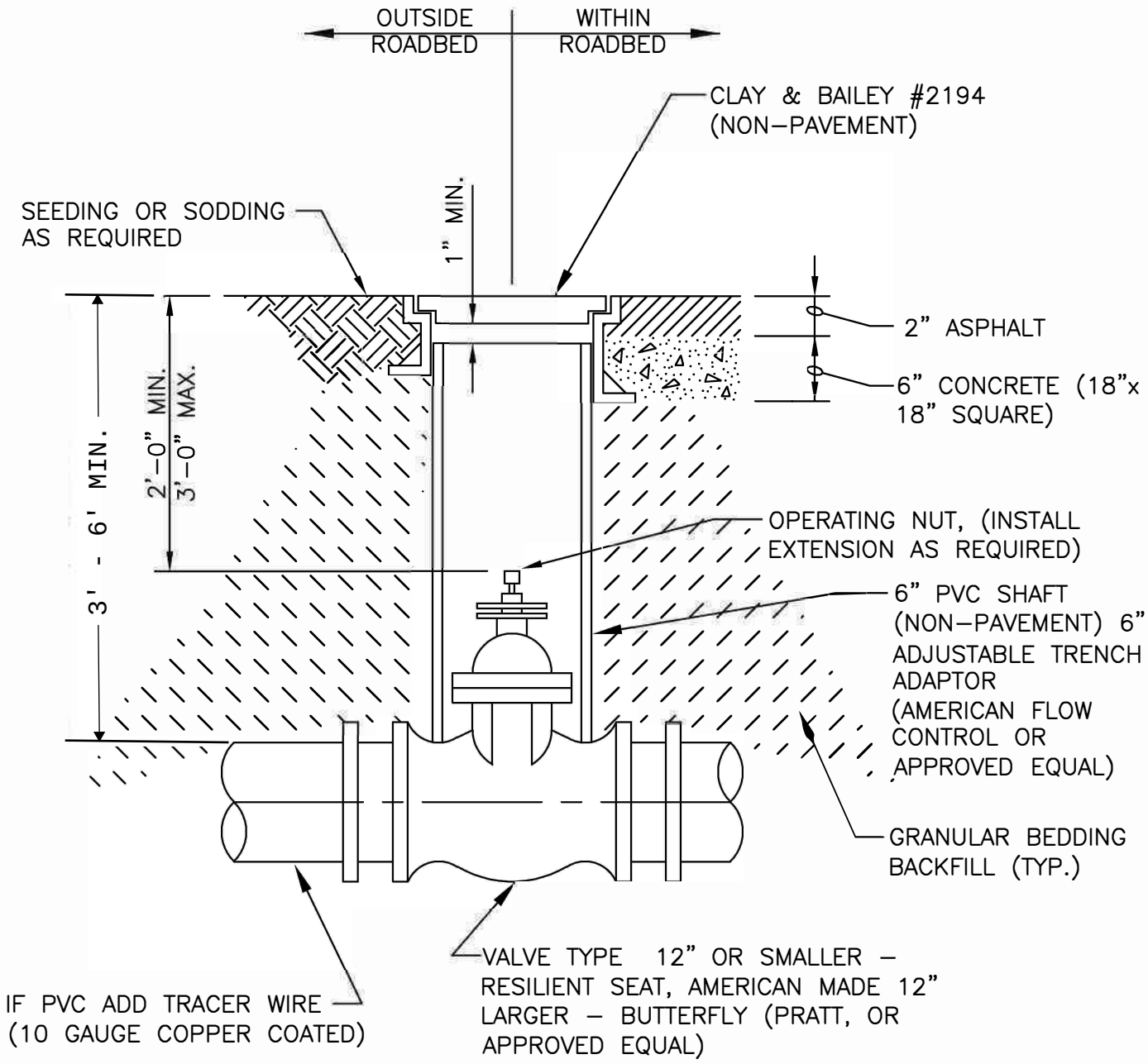

VALVE BOX DETAIL

GRAIN VALLEY MISSOURI

DATE:	6/2/20
SCALE:	NO SCALE

WAT–002

BENDS LESS THAN 45°	B	C	D	E	F		BENDS 45° THRU 90°	B	C	D	E	F
6"	8"	18"	12"	24"	12"		6"	8"	30"	12"	24"	30"
8"	8"	24"	12"	24"	18"		8"	8"	36"	12"	24"	36"
10"	8"	24"	12"	24"	18"		10"	8"	42"	12"	24"	42"
12"	8"	36"	18"	24"	24"		12"	12"	54"	18"	30"	48"
16"	12"	36"	18"	24"	30"		16"	18"	60"	18"	30"	48"
24"	18	42	30	30	36		24"	24"	72"	30"	36"	54"
TEES	G	H	I	J			TEES	G	H	I	J	
6"x 6"x 6"	12"	24"	24"	18"			16"x 16"x 6"	12"	24"	24"	18"	
8"x 8"x 6"	12"	24"	24"	18"			16"x 16"x 8"	12"	24"	24"	24"	
8"x 8"x 8"	12"	24"	24"	24"			16"x 16"x 12"	12"	36"	24"	36"	
10"x 10"x 6"	12"	24"	24"	18"			16"x 16"x 16"	18"	48"	30"	48"	
10"x 10"x 8"	12"	24"	24"	24"			24"x 24"x 8"	12"	24"	24"	24"	
10"x 10"x 10"	12"	24"	24"	30"			24"x 24"x 10"	12"	30"	24"	30"	
12"x 12"x 6"	12"	24"	24"	18"			24"x 24"x 12"	18"	36"	24"	36"	
12"x 12"x 8"	12"	24"	24"	24"			24"x 24"x 16"	18"	48"	30"	48"	
12"x 12"x 12"	12"	36"	24"	36"			24"x 24"x 24"	24"	60"	36"	60"	

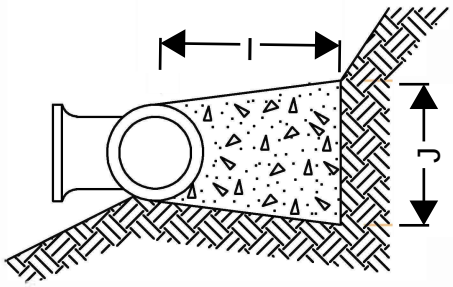

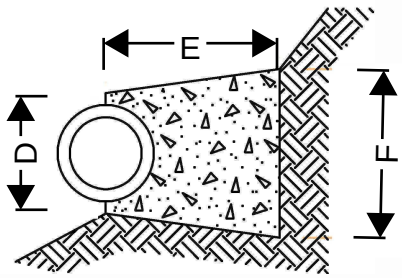

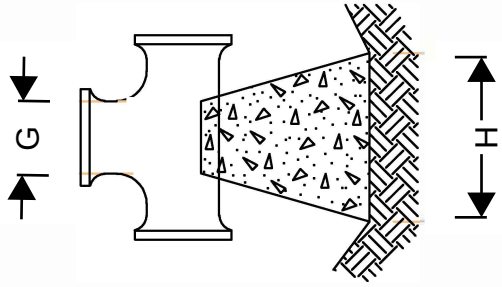

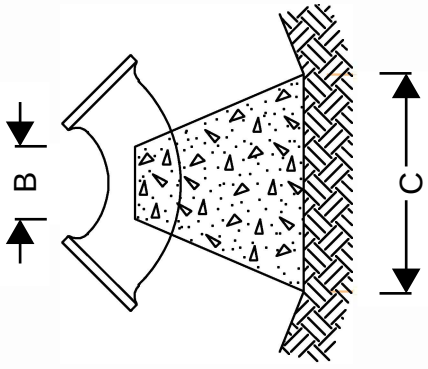

NOTE: ALL MECHANICAL FITTINGS SHALL BE ANCHORED TO PIPE.

THRUST BLOCK DETAIL

GRAIN VALLEY MISSOURI

DATE:	6/2/20
SCALE:	NO SCALE

WAT-012

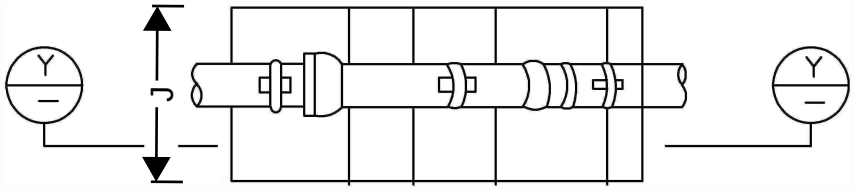

PLAN

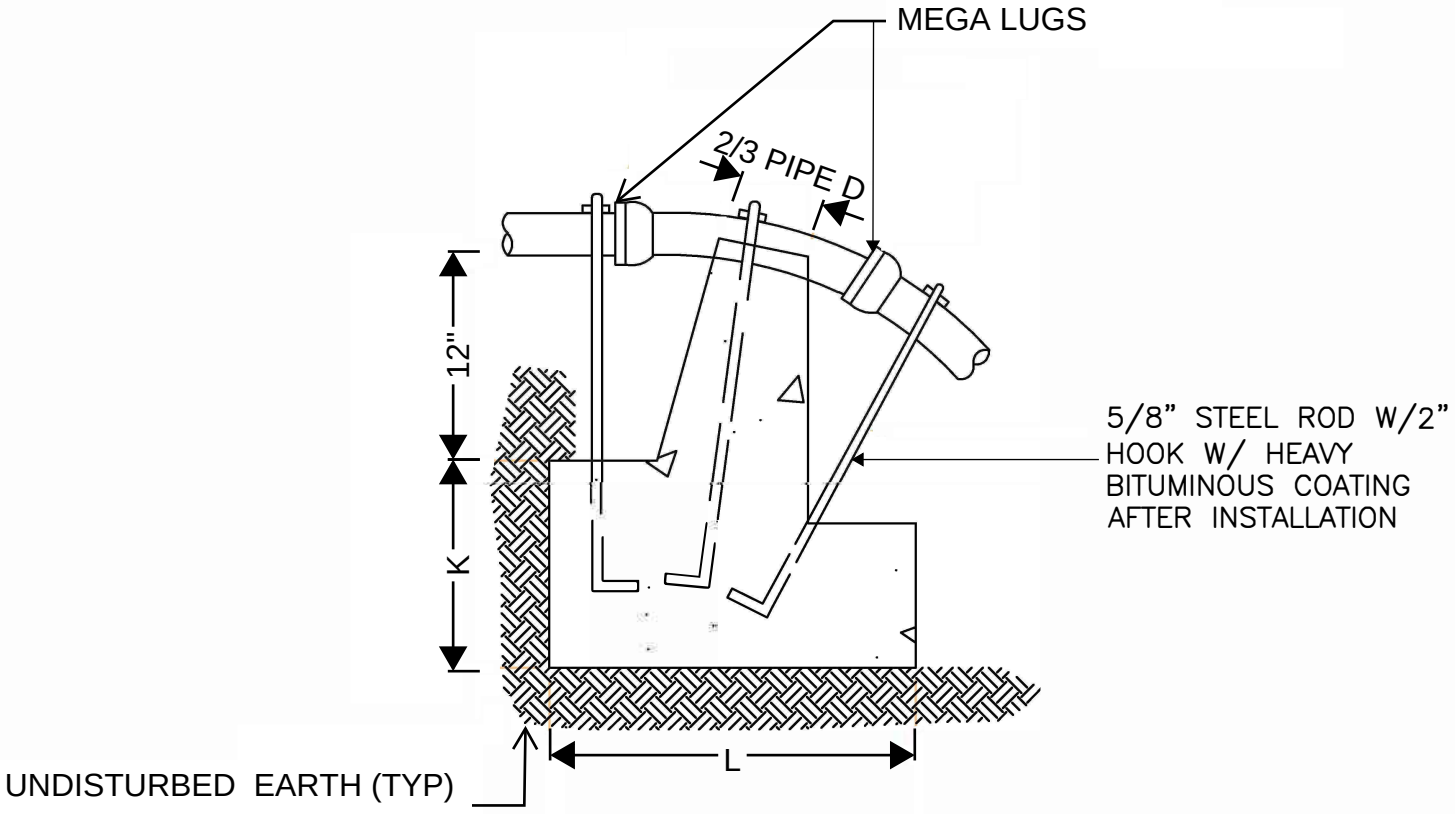

UNDISTURBED EARTH (TYP.)

SECTION Y–Y 

PIPE SIZE	J	K	L
6" & SMALLER	2'–6"	2'–6"	3'–0"
8"	3–0"	2'–9"	4'–0"

VERTICAL BEND THRUST BLOCK DETAIL

GRAIN VALLEY MISSOURI

DATE:	6/2/20
SCALE:	NO SCALE

WAT–013

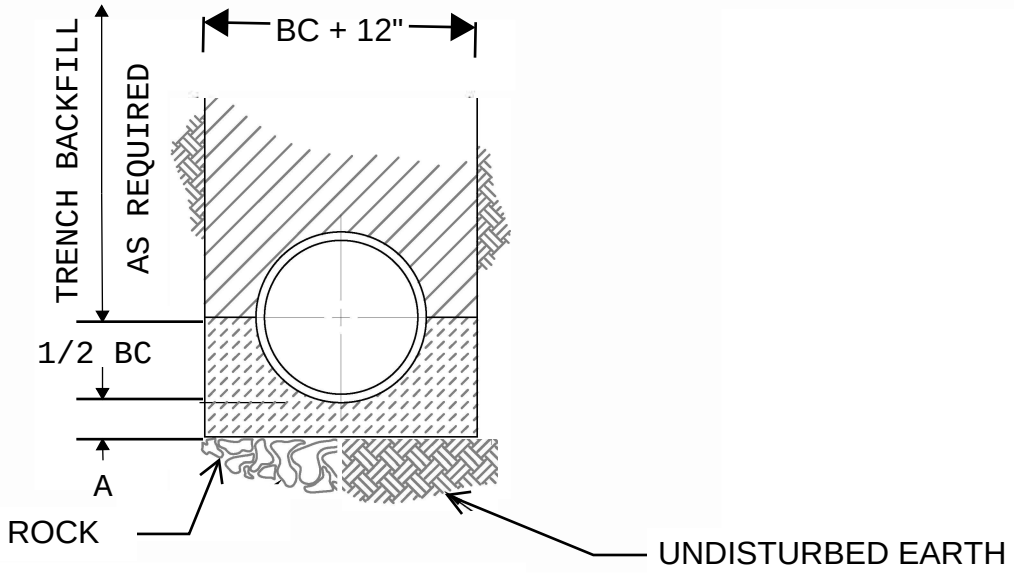

WATER MAIN EMBEDMENT

LEGEND	
BC	OUTSIDE DIA. OF PIPE
D	NOMINAL PIPE SIZE
A	EMBEDMENT BELOW PIPE
	TRENCH BACKFILL
	TAMPED GRANULAR BACKFILL (TYPE 3)
	GRANULAR BEDDING
	CONCRETE
	CLEAN CRUSHED STONE

TABLE OF EMBEDMENT DEPTHS BELOW PIPE		
D	A MIN SOIL	A MIN ROCK
0"–27"	0"	6"
30"–60"	0"	9"
66"–UP	0"	12"

TRENCH EMBEDMENT NOTES:

1. GRANULAR BEDDING SHALL BE CRUSHED ROCK OR PEA GRAVEL WITH NOT LESS THAN 95% PASSING 3/4" (95% PASSING 1" FOR 30" AND LARGER PIPE) AND NOT LESS THAN 95% RETAINED ON A 3/8"; TO BE PLACED IN NOT MORE THAN 6" LAYERS AND COMPACTED BY SLICING WITH A SHOVEL OR VIBRATING.

2. TAMPED GRANULAR BACKFILL (TYPE 5) SHALL BE GRANULAR MATERIAL CONFORMING TO THE REQUIREMENTS OF SECTION 1007.3 OF THE 2019 MISSOURI STANDARD SPECIFICATIONS FOR HIGHWAY CONSTRUCTION.

3. TRENCH BACKFILL (TYPE 1) SHALL BE FINELY DIVIDED MATERIAL FREE FROM DEBRIS AND STONES, COMPACTED TO 95% MAXIMUM DENSITY.

4. FLOWABLE FILL OR TYPE 5 AGGREGATE COMPACTED TO 95% OF STANDARD DENSITY WITH TESTING EACH LIFT IS REQUIRED UNDER EXISTING OR PROPOSED PAVEMENT. ALL MATERIAL SHALL BE COMPACTED TO 95% IN THE RIGHT OF WAY AND 90% OUTSIDE OF THE RIGHT OF WAY.

WATERLINE PIPE EMBEDMENT DETAILS

GRAIN VALLEY MISSOURI

DATE:	04/28/20
SCALE:	NO SCALE

CORPORATION TAPS

NOTE: A CORPORATION TAP SHALL NOT BE CLOSER THAN 18" TO A BELL FITTING OR ANOTHER TAP.

TAPPING VALVES

NOTE: TAPS SHALL NOT BE LESS THAN 3' FROM SPIGOT END & 18" FROM BELL OF PIPE.

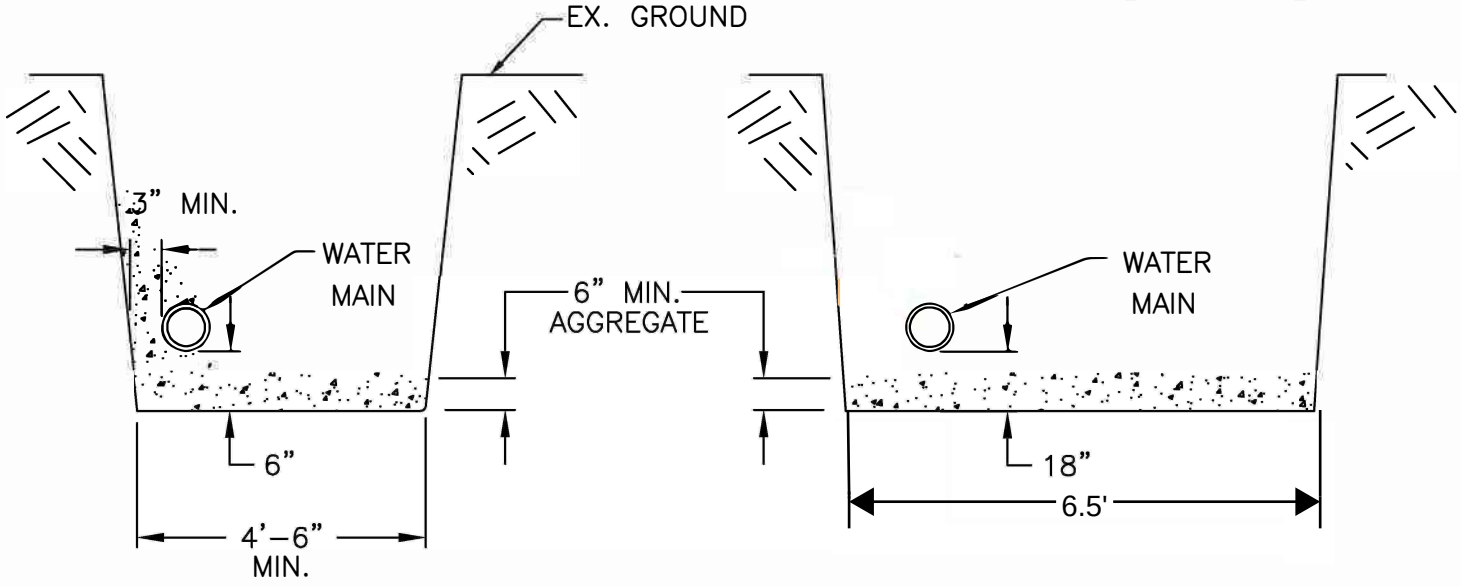

SECTION VIEWS

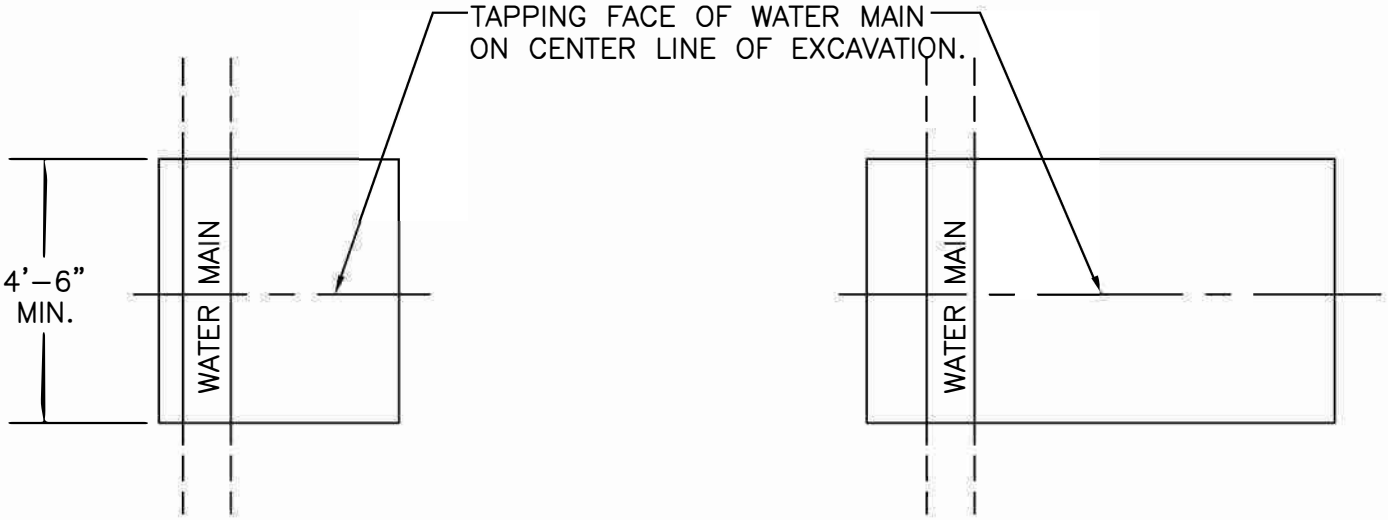

NOTES:

1. EXCAVATIONS EXCEEDING 5' IN DEPTH MUST BE SHORED, BY CONTRACTOR.
2. ALL MATERIAL FOR SERVICE MUST BE INSTALLED PRIOR TO TAP BEING MADE.

PLAN VIEWS

EXCAVATION DETAILS

GRAIN VALLEY MISSOURI

DATE:	6/2/20
SCALE:	NO SCALE

WAT-015

DATE: 6/2/20
SCALE: NO SCALE

GRAIN VALLEY MISSOURI

ALLOWABLE LEAKAGE PER 1,000 FEET OF PIPELINE* – gph

NOMINAL PIPE DIAMETER (INCHES)

AVERAGE TEST PRESSURE (psi)	4	6	8	10	12	14	16	18	20	24
300	0.52	0.78	1.04	1.30	1.56	1.82	2.08	2.34	2.60	3.12
275	0.50	0.75	1.00	1.24	1.49	1.74	1.99	2.24	2.49	2.99
250	0.47	0.71	.095	1.19	1.42	1.66	1.90	2.14	2.37	2.85
225	0.45	0.68	0.90	1.13	1.35	1.58	1.80	2.03	2.25	2.70
200	0.43	0.64	0.85	1.06	1.28	1.48	1.70	1.91	2.12	2.55
175	0.40	0.59	0.80	0.99	1.19	1.39	1.59	1.79	1.98	2.38
150	0.37	0.55	0.74	0.92	1.10	1.29	1.47	1.66	1.84	2.21
125	0.34	0.50	0.67	0.84	1.01	1.18	1.34	1.51	1.68	2.01
100	0.30	0.45	0.60	0.75	0.90	1.05	1.20	1.35	1.50	1.80

* FOR PIPE WITH 18–FOOT NOMINAL LENGTHS. TO OBTAIN THE RECOMMENDED ALLOWABLE LEAKAGE FOR PIPE WITH 20–FOOT LENGTHS, MULTIPLY THE LEAKAGE CALCULATED FROM THE TABLE BY 0.9. IF THE PIPELINE UNDER TEST CONTAINS SECTIONS OF VARIOUS DIAMETERS, THE ALLOWABLE LEAKAGE WILL BE THE SUM OF THE COMPUTED LEAKAGE FOR EACH SIZE.

ALLOWABLE LEAKAGE FOR WATERLINES

WAT-017

GRAIN VALLEY
MISSOURI

EROSION CONTROL NOTES

1. Provide temporary silt fencing at all pipe entrances until all site seeding and sodding has been established. Maintain as necessary.

2. Immediately remove sediments or other materials tracked onto public roadways.

3. Provide and maintain stabilized roadway construction entrance (or entrances as may be required).

4. Coordinate site grading with existing and proposed utilities.

5. Stockpile waste excavation materials away from existing channels, adjacent properties and grade to drain.

6. Remove silt build up in basin and verify grade prior to final seeding, lining or rip-rap installation and clean up.

7. All disturbed areas shall be seeded, fertilized and mulched, or sodded, in accordance with the Standards and Specifications adopted by the City of Grain Valley, MoDOT, MoDNR or other governing agency and good engineering practices.

8. Silt fences, whether straw bales or filter fabric, require maintenance to preserve their effectiveness. All silt fences shall be inspected immediately after each heavy rainstorm and at least daily during prolonged rainfall. Any required repairs shall be made immediately. When sediment deposits reach approximately one-half the height of the silt fence, the sediment shall be removed or a second silt fence shall be installed. All costs associated with this work, including related incidentals, shall be the contractor's responsibility and shall be included in the bid for the proposed work.

9. Failure to maintain erosion control on projects as stated above may be cause of project shutdown until corrections are completed.

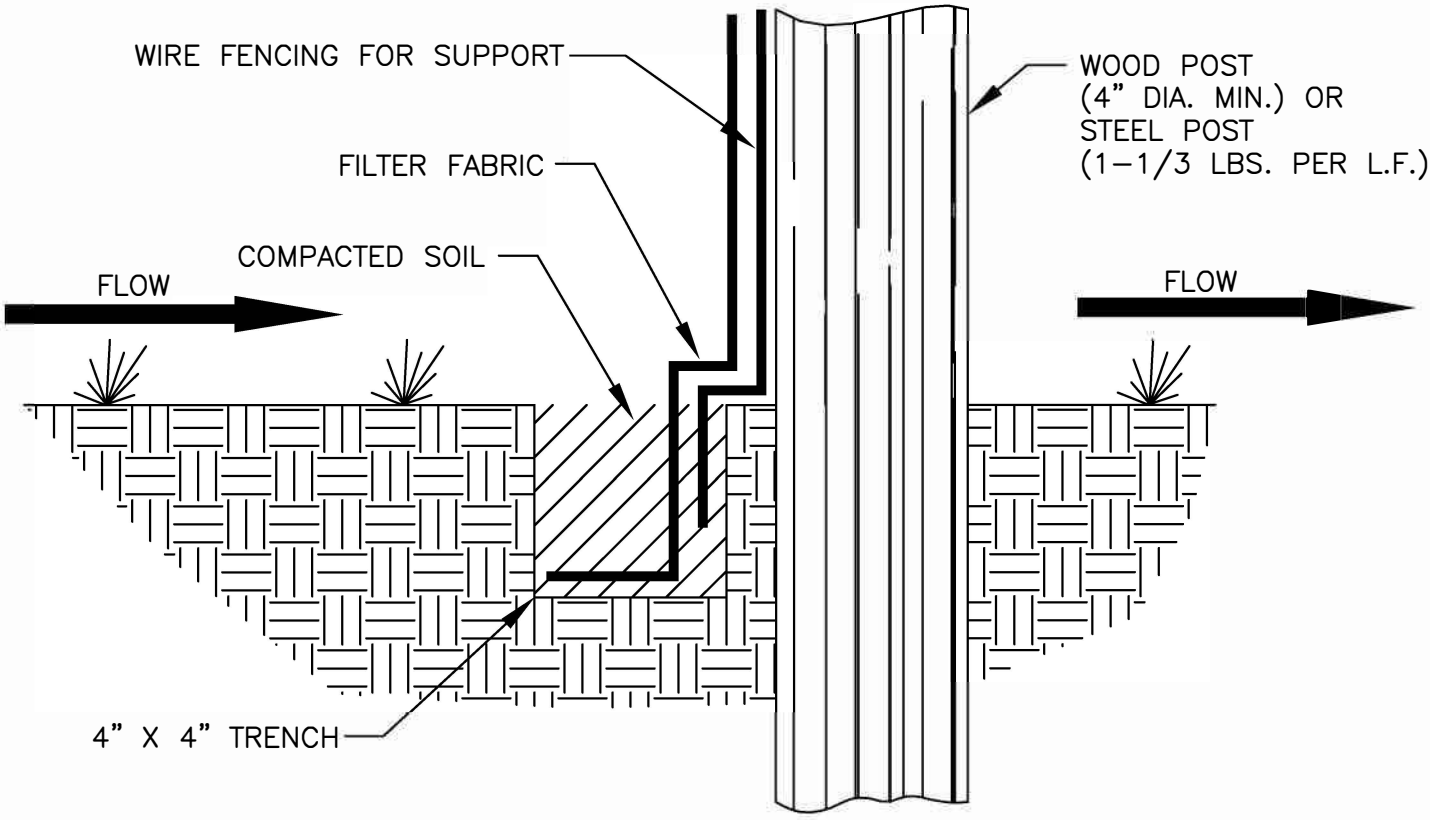

SECTION VIEW

NOTES:

1. THE SIZE OF THE DRAINAGE AREA SHOULD BE NO MORE THAN 1/4 ACRE PER 100 LINEAR FEET OF FENCE LENGTH.
2. THE MAXIMUM SLOPE LENGTH ABOVE THE FENCE SHOULD BE LESS THAN 100 FEET.
3. NO DITCH OR DRAINAGEWAY WITH AN AREA GREATER THAN 2 ACRES SHALL BE ENCLOSED ABOVE A SILT FENCE.
4. NO SILT FENCE SHALL BE CONSTRUCTED IN A LIVE STREAM OR DRAINAGEWAY WITH EXPECTED FLOWS GREATER THAN 1 CFS.
5. THE FILTER FABRIC SHALL HAVE A MINIMUM FILTERING EFFICIENCY OF 75%, A MINIMUM TENSILE STRENGTH OF 30 LBS. PER LINEAR INCH AND A FLOW RATE OF 0.3 GALLONS PER SQUARE FOOT PER MINUTE. THE FILTER FABRIC SHALL ALSO HAVE ULTRAVIOLET RAY INHIBITORS TO ASSURE A LIFE USE EXPECTANCY OF 6 MONTHS AT 0 TO 100 DEGREES FAHRENHEIT.
6. THE FILTER FABRIC SHALL BE 36 INCHES OR LESS IN HEIGHT, WITH JOINTS AT EVERY POST AVOIDING OVERLAP IF POSSIBLE (6" MIN. OVERLAP IF NECESSARY) AND POSTS SPACED EVERY 10 FEET WITH WIRE MESH SUPPORT OR 6 FEET WITHOUT WITHOUT SUPPORT, MAKING SURE THAT A MIN. OF 8" OF FABRIC IS BURIED IN THE 4" X 4" TRENCH.
7. THE SILT FENCE SHALL BE INSPECTED AFTER EVERY RAINFALL TO DETERMINE IF ANY PART OF THE FENCE NEEDS TO BE REPAIRED OR REPLACED. IF IT IS DETERMINED THAT THE FENCE NEEDS ANY REPAIR OR REPLACEMENT THIS SHALL BE DONE IMMEDIATELY.
8. SEDIMENT DEPOSITS SHALL BE REMOVED AFTER EACH RAINFALL OR BEFORE THEY ACCUMULATE TO 1/2 OF THE FENCE HEIGHT.

SILT FENCE DETAIL

GRAIN VALLEY
MISSOURI

DATE:	6/2/20
SCALE:	NO SCALE

ERO–001

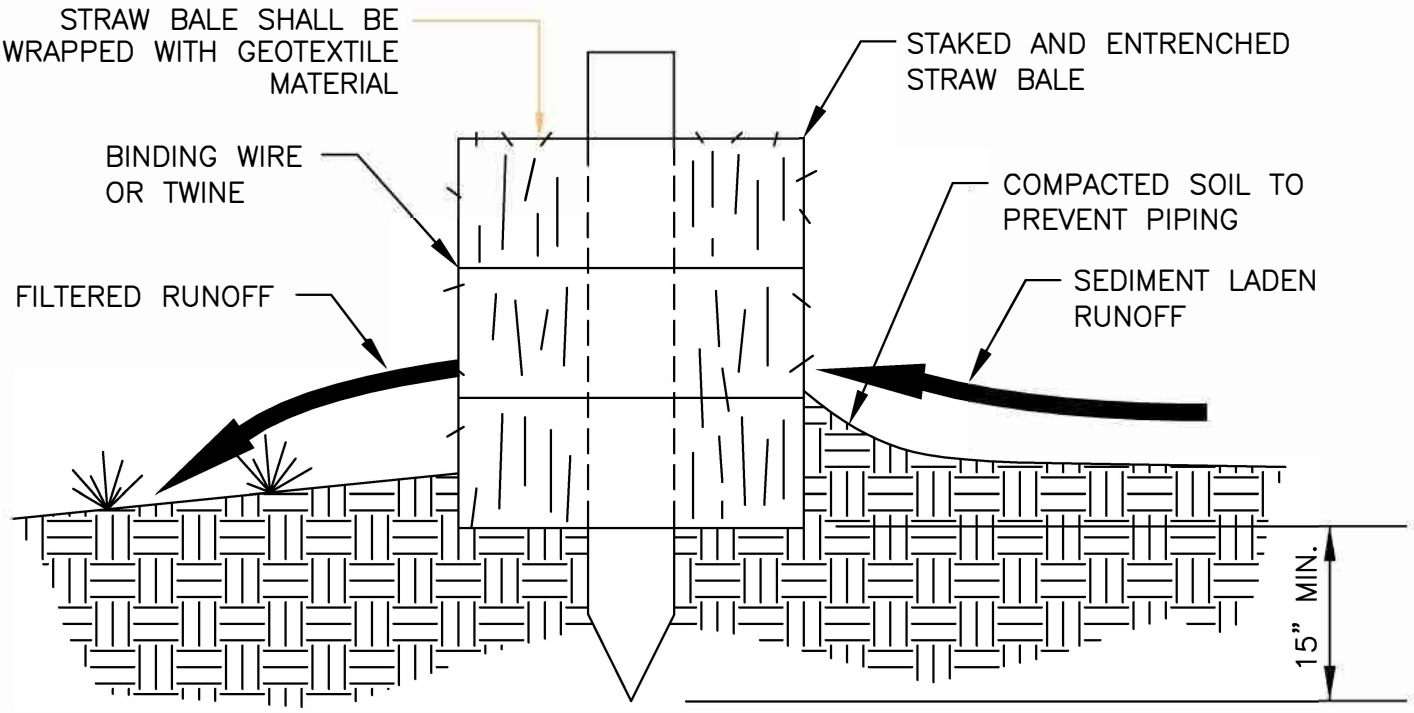

SECTION VIEW

NOTES:

1. STRAW BALES SHOULD ONLY BE USED FOR DRAINAGE AREAS NO LARGER THAN 1/4 ACRE PER 100 FEET OF BALES OR FOR DITCHES DRAINING NO MORE THAN 2 ACRES.
2. STRAW BALES SHOULD ONLY BE USED AS A TEMPORARY MEASURE AND FOR NO LONGER THAN A TIME PERIOD OF THREE MONTHS.
3. EXCAVATE A TRENCH ALONG THE AREAS THAT THE STRAW BALES WILL BE USED AS EROSION CONTROL TO A DEPTH OF 4 INCHES AND TO THE WIDTH OF ONE STRAW BALE. THE STRAW BALES THEN SHALL BE PLACED IN THE TRENCH. SAVE EXCAVATED MATERIAL ON THE UPSTREAM SIDE OF THE TRENCH.
4. STRAW BALES SHOULD BE ANCHORED WITH A MIN. OF 2 STAKES OR REBARS DRIVEN INTO THE UNDERLYING SOIL, MAKING SURE THAT THE BINDING WIRE OR TWINE IS FACING THE SIDES AND NOT TOUCHING THE SOIL. THE FIRST STAKE INTO EACH BALE SHOULD BE DRIVEN TOWARD THE PREVIOUSLY LAID BALE TO FORCE THEM TOGETHER.
5. SPACING BETWEEN THE BALES SHOULD BE TIGHTLY CHINKED WITH LOOSE STRAW.
6. AFTER STRAW BALES ARE IN PLACE THE EXCAVATED SOIL SHOULD BE BACKFILLED AGAINST THE UPSLOPE SIDE OF THE STRAW BALES TO A HEIGHT OF 4 INCHES AFTER COMPACTING.
7. STRAW BALES SHOULD BE INSPECTED AFTER EACH RAINFALL TO DETERMINE IF ANY REPAIRS OR REPLACEMENTS TO THE STRAW BALES ARE NEEDED. IF IT IS DETERMINED THAT THE STRAW BALES NEED TO BE REPAIRED OR REPLACED, THIS SHOULD BE DONE IMMEDIATELY. SEDIMENT ACCUMULATIONS MUST BE REMOVED WHEN THEY REACH 1/2 THE BARRIER HEIGHT.

STRAW BALE DETAIL

GRAIN VALLEY MISSOURI

DATE:	6/2/20
SCALE:	NO SCALE

ERO-002

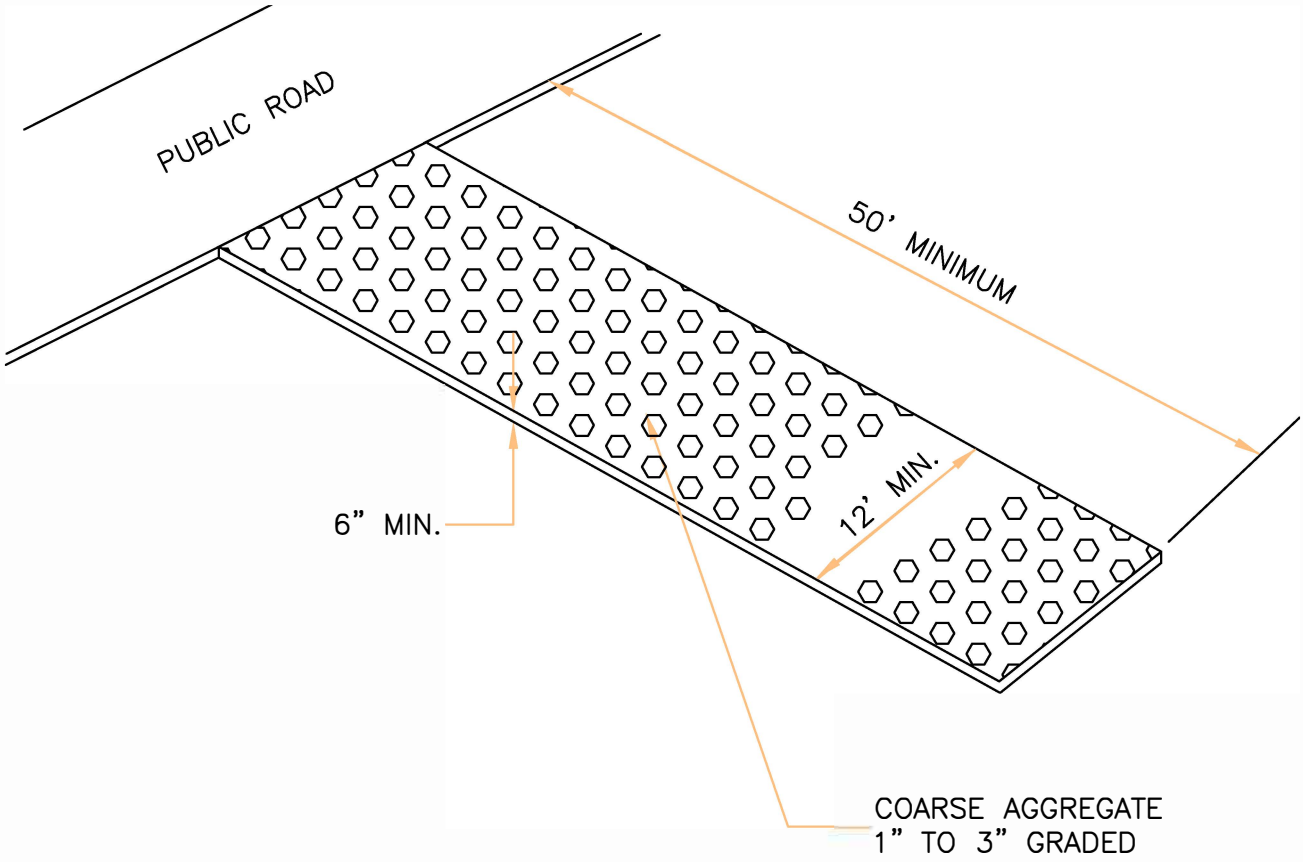

GRAVEL CONSTRUCTION ENTRANCE DETAIL

GRAIN VALLEY
MISSOURI

DATE:	6/2/20
SCALE:	NO SCALE

ERO-003

CITY OF GRAIN VALLEY

WATER TOWER UPGRADE

APPENDIX C

FAA DETERMINATION LETTER
AERONAUTICAL STUDY NO. 2024-ACE-8489-OE

Mail Processing Center
Federal Aviation Administration
Southwest Regional Office
Obstruction Evaluation Group
10101 Hillwood Parkway
Fort Worth, TX 76177

Aeronautical Study No.
2024-ACE-6489-OE

Issued Date: 01/15/2025

Logan Sours
Crawford, Murphy & Tilly
1627 Main Street, Suite 600
Kansas City, MO 64108

**** DETERMINATION OF NO HAZARD TO AIR NAVIGATION ****

The Federal Aviation Administration has conducted an aeronautical study under the provisions of 49 U.S.C., Section 44718 and if applicable Title 14 of the Code of Federal Regulations, part 77, concerning:

Structure:	Water Tower Grain Valley Water Tower
Location:	Grain Valley, MO
Latitude:	39-01-39.11N NAD 83
Longitude:	94-13-14.85W
Heights:	933 feet site elevation (SE)
	116 feet above ground level (AGL)
	1049 feet above mean sea level (AMSL)

This aeronautical study revealed that the structure would have no substantial adverse effect on the safe and efficient utilization of the navigable airspace by aircraft or on the operation of air navigation facilities. Therefore, pursuant to the authority delegated to me, it is hereby determined that the structure would not be a hazard to air navigation provided the following condition(s) is(are) met:

As a condition to this Determination, the structure is to be marked/lighted in accordance with FAA Advisory circular 70/7460-1 M Change 1, Obstruction Marking and Lighting, red lights-Chapters 4,5(Red),&15.

Any failure or malfunction that lasts more than thirty (30) minutes and affects a top light or flashing obstruction light, regardless of its position, should be reported immediately to (877) 487-6867 so a Notice to Air Missions (NOTAM) can be issued. As soon as the normal operation is restored, notify the same number.

It is required that FAA Form 7460-2, Notice of Actual Construction or Alteration, be e-filed any time the project is abandoned or:

_____ At least 10 days prior to start of construction (7460-2, Part 1)
__X__ Within 5 days after the construction reaches its greatest height (7460-2, Part 2)

See attachment for additional condition(s) or information.

This determination expires on 07/15/2026 unless:

(a) the construction is started (not necessarily completed) and FAA Form 7460-2, Notice of Actual Construction or Alteration, is received by this office.
(b) extended, revised, or terminated by the issuing office.
(c) the construction is subject to the licensing authority of the Federal Communications Commission (FCC) and an application for a construction permit has been filed, as required by the FCC, within 6 months of the date of this determination. In such case, the determination expires on the date prescribed by the FCC for completion of construction, or the date the FCC denies the application.

NOTE: REQUEST FOR EXTENSION OF THE EFFECTIVE PERIOD OF THIS DETERMINATION MUST BE E-FILED AT LEAST 15 DAYS PRIOR TO THE EXPIRATION DATE. AFTER RE-EVALUATION OF CURRENT OPERATIONS IN THE AREA OF THE STRUCTURE TO DETERMINE THAT NO SIGNIFICANT AERONAUTICAL CHANGES HAVE OCCURRED, YOUR DETERMINATION MAY BE ELIGIBLE FOR ONE EXTENSION OF THE EFFECTIVE PERIOD.

This determination is subject to review if an interested party files a petition that is received by the FAA on or before February 14, 2025. In the event an interested party files a petition for review, it must contain a full statement of the basis upon which the petition is made. Petitions can be submitted to the Manager, Rules and Regulations Group via email at OEPetitions@faa.gov, or via mail to Federal Aviation Administration, Air Traffic Organization, Rules and Regulations Group, 5th floor, 600 Independence Ave, SW., Washington, DC 20597. FAA encourages the use of email to ensure timely processing.

This determination becomes final on February 24, 2025 unless a petition is timely filed. In which case, this determination will not become final pending disposition of the petition. Interested parties will be notified of the grant of any review. Any questions regarding your petition, contact Rules and Regulations Group via telephone (202) 267-8783.

This determination is based, in part, on the foregoing description which includes specific coordinates, heights, frequency(ies) and power. Any changes in coordinates, heights and frequencies or use of greater power, except those frequencies specified in the Colo Void Clause Coalition; Antenna System Co-Location; Voluntary Best Practices, will void this determination. Any future construction or alteration, including increase to heights, power or the addition of other transmitters, requires separate notice to the FAA. This determination includes all previously filed frequencies and power for this structure.

If construction or alteration is dismantled or destroyed, you must submit notice to the FAA within 5 days after the construction or alteration is dismantled or destroyed.

This determination does include temporary construction equipment such as cranes, derricks, etc., which may be used during actual construction of the structure. However, this equipment shall not exceed the overall heights as indicated above. Equipment which has a height greater than the studied structure requires separate notice to the FAA.

This determination concerns the effect of this structure on the safe and efficient use of navigable airspace by aircraft and does not relieve the sponsor of compliance responsibilities relating to any law, ordinance, or regulation of any Federal, State, or local government body.

This aeronautical study considered and analyzed the impact on existing and proposed arrival, departure, and en route procedures for aircraft operating under both visual flight rules and instrument flight rules; the impact on all existing and planned public-use airports, military airports and aeronautical facilities; and the cumulative impact resulting from the studied structure when combined with the impact of other existing or proposed

structures. The study disclosed that the described structure would have no substantial adverse effect on air navigation.

An account of the study findings, aeronautical objections received by the FAA during the study (if any), and the basis for the FAA's decision in this matter can be found on the following page(s).

If we can be of further assistance, please contact Luke Wray, at (817) 222-4559, or luke.w.wray@faa.gov. On any future correspondence concerning this matter, please refer to Aeronautical Study Number 2024-ACE-6489-OE.

Signature Control No: 640231374-644301395 (DNH)
Julie A. Morgan
Manager, Obstruction Evaluation Group

Attachment(s)
Additional Information
Map(s)

Part 77 - Title 14 CFR Part 77, Safe, Efficient Use and Preservation of the Navigable Airspace

Our study has disclosed that the proposed water tower would be located approximately 0.79 NM northwest of the approach end of RWY 23 for the East Kansas City Airport (3GV) Grain Valley, MO.

OBSTRUCTION STANDARDS EXCEEDED

The proposed water tower is identified as exceeding the obstruction standards of 14 CFR Part 77 as applied to 3GV:

Section 77.17(a)(5): The surface of a takeoff and landing area of an airport or any imaginary surface established under 77.19, 77.21, or 77.23:

77.19 (a) Horizontal surface. A horizontal plane 150 feet above the established airport elevation.

-------> Exceeds by 64 feet.

EFFECT ON AERONAUTICAL OPERATIONS

Part 77 obstruction standards are used to screen the many proposals submitted in order to identify those which warrant further aeronautical study. This study is conducted in order to determine if the proposal would have a significant adverse effect on aeronautical operations and airspace. While part 77 obstruction standards may trigger formal aeronautical study, including public circularization, these obstruction standards do not constitute absolute or arbitrary criteria for identification of hazards to air navigation. Accordingly, the fact that a proposed structure exceeds certain obstruction standards of part 77 is in itself not sufficient grounds for issuance of a determination of hazard to air navigation.

CIRCULARIZATION

The proposed water tower was not circularized to the public for the following reason:

In accordance with the 7400.2M, 6-3-17, Section 1(b), a structure that would be located on a site in proximity to another previously studied structure, would have no greater effect on aeronautical operations and procedures, and the basis for the determination issued under the previous study could be appropriately applied. The proposed utility pole would be located within approximately 284 feet of a taller existing water tower at 127 feet AGL / 1065 AMSL that was studied under 1997-ACE-296-OE.

This policy does not affect the public's right to petition for review determinations regarding structures, which exceed the subject obstruction standards.

BASIS FOR DECISION

The study did not identify any IFR arrival, departure, or en route effects. There would be no effects on any existing or proposed en route VFR operations. There are no physical or electromagnetic effects on the operation of air navigation and communications facilities. The study did not disclose any effects on any

airspace and routes used by the military. It would not impact 3GV airport or any other existing or planned public use of military airport would be impacted.

The incorporation of marking and lighting (red light) on this water tower will provide additional conspicuity for pilots flying in this vicinity. Although the recommended marking and lighting portion of this determination is advisory, should the proponent decide not to mark and light this structure IAW AC 70/7460-1M, the FAA reserves the right to change its determination to a Determination of Hazard (DOH).

DETERMINATION - NO HAZARD TO AIR NAVIGATION

The cumulative impact of the structure is not considered significant. Study did not disclose any adverse effect on existing or proposed public-use or military airports or navigational facilities. Nor would the structure affect the capacity of any known existing or planned public-use or military airport.

Therefore, it is determined that the structure does not have a substantial adverse effect on the safe and efficient utilization of the navigable airspace by aircraft or on any air navigation facility and is not a hazard to air navigation.

TOPO Map for ASN 2024-ACE-6489-OE



Sectional Map for ASN 2024-ACE-6489-OE

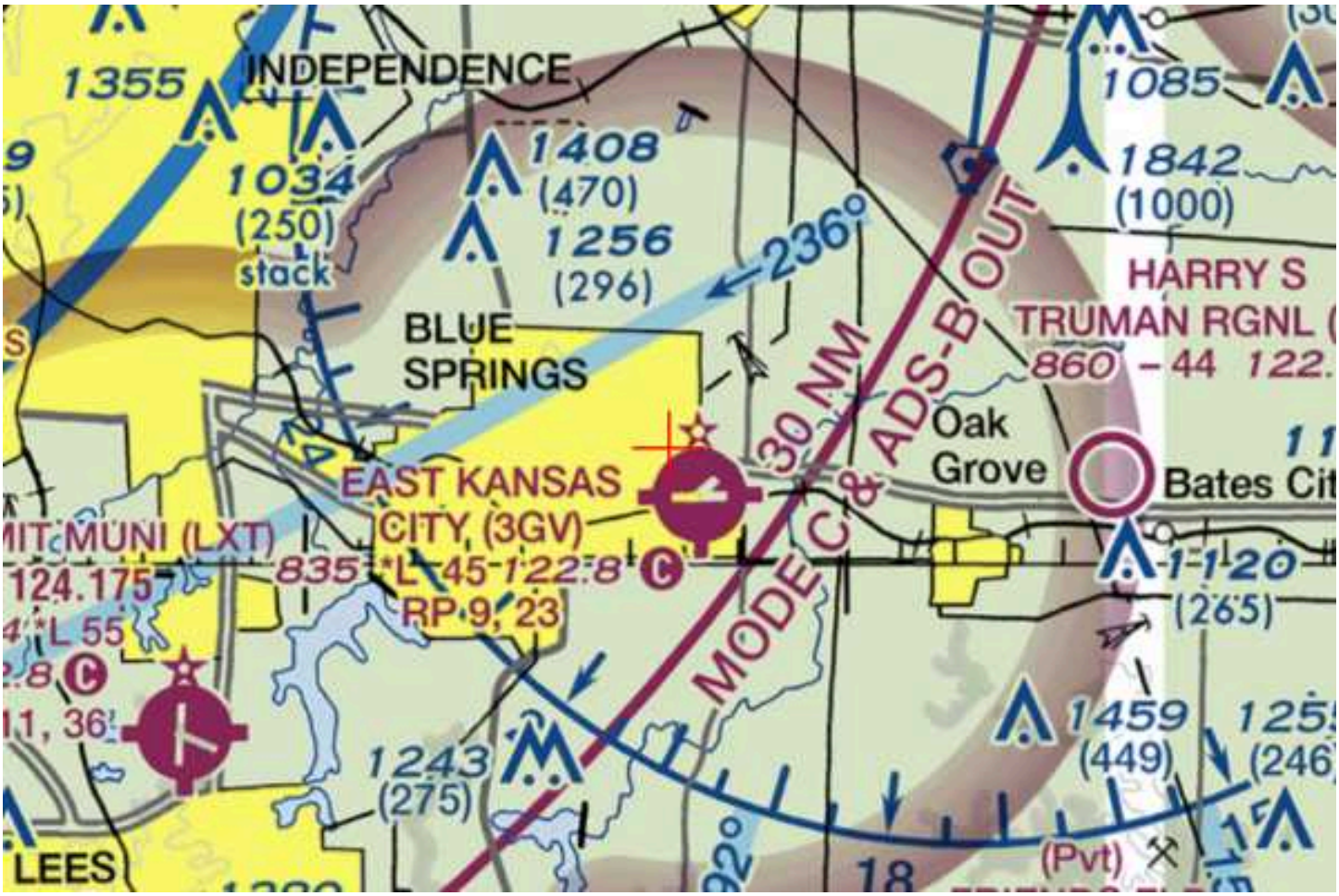

CITY OF GRAIN VALLEY

WATER TOWER UPGRADE

APPENDIX D

BID ALTERNATE NO. 1
TRI-COUNTY WATER AUTHORITY
PROPOSED EMERGENCY CONNECTION
PLAN SHEET

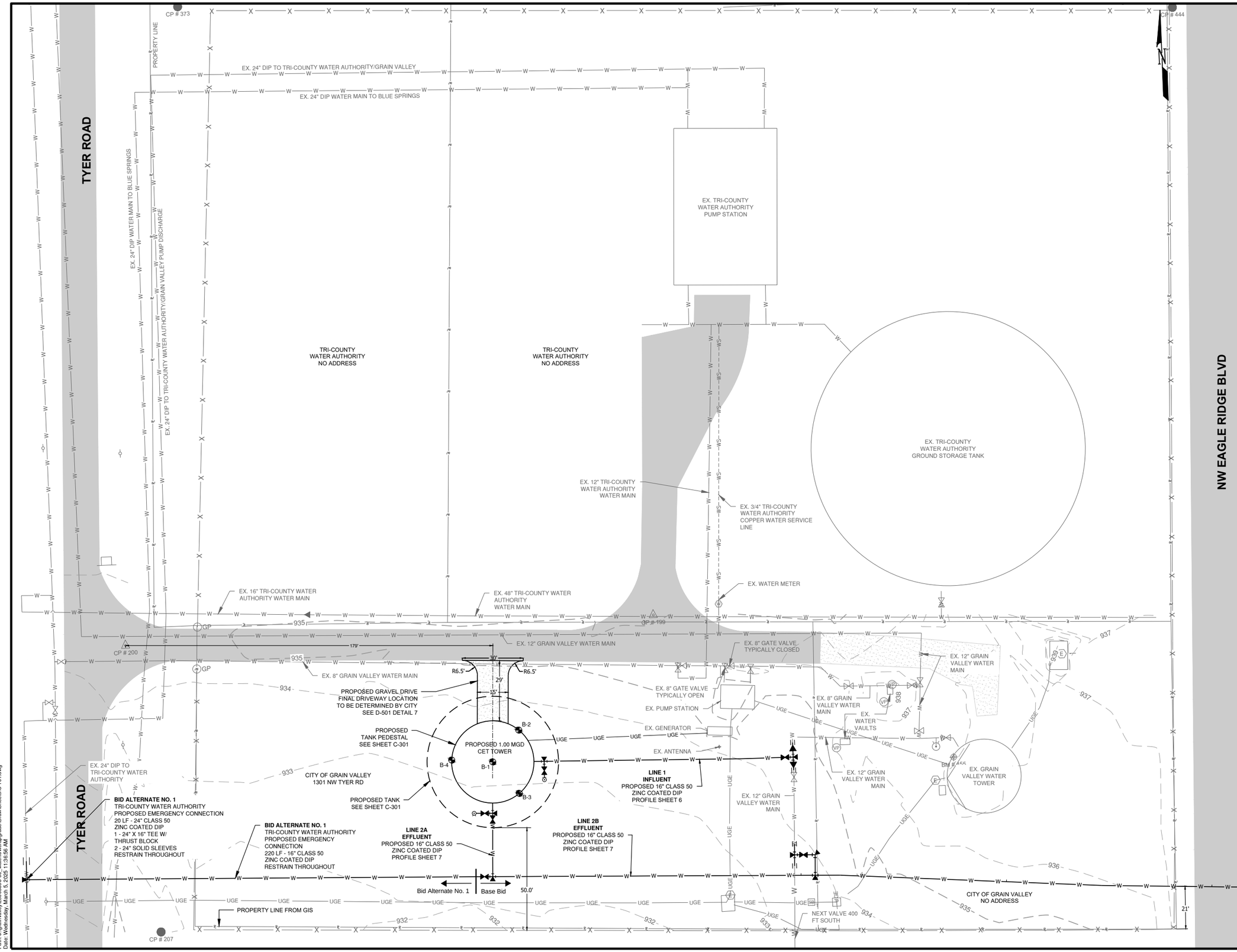

Path: J:\grainvalley\23005898-00_watertowerupgrade\Draw\Sheets\C-101.dwg
Date: Wednesday, March 5, 2025 11:36:56 AM

CMT

HOR. 10 0 10 20
SCALE IN FEET

EX. 8" DIP

STATE OF MISSOURI
CELIA LAMPRECHT
NUMBER PE-2024003378
05/01/2025
PROFESSIONAL ENGINEER

WATER TOWER UPGRADE
FINAL CONSTRUCTION PLANS

FINAL CONSTRUCTION PLANS
MAY 2025

WATER TOWER UPGRADE

GRAIN VALLEY MISSOURI
LIFE OUTSIDE THE LINES

MARK	DATE	DESCRIPTION

PROJECT NO:	23005898.00
CAD DWG FILE:	C-101.DWG
DESIGNED BY:	CLL
DRAWN BY:	CLL
CHECKED BY:	JJ
APPROVED BY:	JJ
COPYRIGHT:	CRAWFORD, MURPHY & TILLY, INC. 2025

SHEET TITLE

BID ALTERNATE NO. 1

CITY OF GRAIN VALLEY

WATER TOWER UPGRADE

APPENDIX E

CITY OF GRAIN VALLEY
LOGO AND COLOR PALETTE

GRAIN VALLEY™ MISSOURI

Futura PT Medium
ABCDEFGHIJKLMNOPQRSTUVWXYZ
1234567890!"#$%^&*()@?+/

Futura PT Book
ABCDEFGHIJKLMNOPQRSTUVWXYZ
1234567890!"#$%^&*()@?+/

COLOR PALETTE

The color palette is clean and fresh. It was developed with the psychology of color in-mind.

LOGO COLORS

PMS 632C	R 0 G 147 B 178	C 93 M 2 Y 15 K 7	HEX 0093B2	**TURQUOISE**	*Compassion, trusting, calming, clarity, objective*
PMS 294C	R 0 G 47 B 108	C 100 M 69 Y 7 K 30	HEX 002F6C	**NAVY BLUE**	*Knowledge, coolness, peace, loyalty, intelligence*
PMS 157C	R 236 G 161 B 84	C 0 M 42 Y 74 K 0	HEX ECA154	**POPPY**	*Creativity, energy, innovative, activity*

ACCENT COLORS

These colors have been selected to complement the logo colors.

PMS 5523C	R 182 G 207 B 208	C 22 M 1 Y 9 K 2	HEX B6CFD0	**SKY BLUE**	*Knowledge, coolness, peace, loyalty, intelligence*
PMS 376C	R 132 G 189 B 0	C 54 M 0 Y 100 K 0	HEX 84BD00	**GREEN**	*Growth, healing, success, harmony, honesty*

- Print logo in PANTONE® spot color for all stationery, business cards, collateral and signage.
- When the specific PANTONE® color cannot be used, the logo may be printed in four-color CMYK process using the tint mixes listed.
- For electronic communication or projected screen presentations, use the RGB tint mixes or HEX color codes listed.

CITY OF GRAIN VALLEY

WATER TOWER UPGRADE

APPENDIX F

MDNR DESIGN STANDARD EXCEPTION REQUEST FORM

MISSOURI DEPARTMENT OF NATURAL RESOURCES
PUBLIC DRINKING WATER BRANCH

DESIGN STANDARDS EXCEPTION REQUEST

FOR OFFICE USE ONLY
PROJECT ID NUMBER
DATE RECEIVED

PUBLIC WATER SUPPLY CLASSIFICATION

☐Community ☐Nontransient Noncommunity ☐ Transient Noncommunity

DATE

NAME OF WATER SYSTEM	COUNTY	PUBLIC WATER SYSTEM ID
		MO

TYPE OF CONSTRUCTION

☐Well ☐Treatment ☐Storage ☐Distribution System
☐Other (Describe)

RULE REFERENCE (IF APPLICABLE)

DESIGN STANDARD REFERENCE

DESCRIPTION OF EXCEPTION REQUEST (IF MORE SPACE IS NEEDED, USE SEPARATE PAGE)

CONSULTING ENGINEER'S JUSTIFICATION AND REFERENCES (IF MORE SPACE IS NEEDED, USE SEPARATE PAGE)

I affirm that data used for justification is factual, and hereby request a design standards exception for this project.

ENGINEER SEAL

CONSULTING ENGINEER NAME AND SIGNATURE

APPLICANT NAME AND SIGNATURE

FOR OFFICE USE ONLY

THE DEPARTMENT'S CONCLUSIONS ARE BASED ON THE FOLLOWING

SIMILAR EXAMPLES USED

ON THE BASIS OF REVIEW CONDUCTED IN ACCORDANCE WITH MISSOURI DRINKNG WATER REGULATIONS

☐Justification is sufficient to approve a ☐Permanent ☐Temporary exception
☐Without conditions ☐With Conditions

☐Exception is denied

DEPARTMENT OF NATURAL RESOURCES REVIEW ENGINEER	SIGNATURE	DATE
CHIEF, INFRASTRUCTURE PERMITS AND ENGINEERING	SIGNATURE	DATE

Mail completed copy to:

MISSOURI DEPARTMENT OF NATURAL RESOURCES
PUBLIC DRINKING WATER BRANCH,
P.O. BOX 176, JEFFERSON CITY, MO 65102-0176
PHONE: 800-361-4827 or 573-751-5331 FAX: 573-526-1146

Or email to: pdwb.engineeringwaterpermits@dnr.mo.gov